RESOLUTION NO. 21842

**Background**

The Illinois State Toll Highway Authority ("Tollway") advertised for sealed bids on Contract I-18-4428 for Bridge Reconstruction on the Tri-State Tollway (I-294) at Mile Post 26.6 (Burlington Northern Santa Fe Railway). The lowest responsive and responsible bidder on Contract No. I-18-4428 is Walsh Construction Company II, LLC in the amount of $77,307,869.87.

**Resolution**

Contract No. I-18-4428 is awarded to Walsh Construction Company II, LLC in the amount of $77,307,869.87, subject to all required approvals, the contractor satisfying applicable DBE, financial and all other contract award requirements, and execution of all contract documents by the bidder and the Tollway.

The Chairman/Chief Executive Officer of the Tollway is authorized to execute the aforementioned Contract, subject to the approval of the General Counsel and the Chief Financial Officer, and the Chief Financial Officer is authorized to issue warrants in payment thereof.

If the bidder fails to satisfy the contract award requirements, the Executive Director is authorized to approve an award to the next lowest responsible bidder, in accordance with the applicable contract award requirements, and execution of all contract documents by the bidder and the Tollway. The Chairman/Chief Executive Officer of the Tollway is authorized to execute any contract awarded to the next lowest bidder, subject to the approval of the General Counsel and the Chief Financial Officer, and the Chief Financial Officer is authorized to issue warrants in payment thereof.

Approved by: _____

Chairman

RETURN WITH BID

ORIGINAL

IMPORTANT
BID ADDENDUM
ENCLOSED

# CONTRACT I-18-4428

# BRIDGE RECONSTRUCTION (BN 261)
# BURLINGTON NORTHERN SANTA FE RAILWAY (BNSF)
# OVER THE TRI-STATE TOLLWAY (I-294)

## TRI-STATE TOLLWAY
## MILE POST 26.6

Illinois Tollway
2700 Ogden Avenue Downers Grove, IL 60515

## VOLUME I

## REQUIRED DOCUMENTS

CN_Tollway_PDK_4428 Contract Requirements Vol 1_ 08142019

**ADDENDUM NO. 5**
**TO**
**CONTRACT REQUIREMENTS**
**FOR CONTRACT I-18-4428**
**ILLINOIS STATE TOLL HIGHWAY AUTHORITY**

**Date: June 11, 2019**

For which proposals will be received by the Illinois State Toll Highway Authority at its offices, 2700 Ogden Avenue, Downers Grove, Illinois 60515 until 10:30:00 A.M. local time, **June 25, 2019.**

## NOTICE OF REVISION TO CONTRACT

**NOTES:**

1. The bid opening date has been revised. Sealed proposals for the above numbered contract will be received by the Illinois State Toll Highway Authority at its offices, 2700 Ogden Avenue, Downers Grove, 60515 until 10:30 A.M., local time, June 25, 2019, at which the proposals will be opened and the bids read aloud. Replace A-1R with the attached page A-1RR. Replace P-1R with attached page P-1RR.

2. Revised Schedule of Price pages P-5RRR, accompany this Addendum and must be inserted into the Contract Proposal by the Bidder. Note, all P-Pages have been included as part of this Addendum.

3. The following revised Special Provision pages are included with this Addendum:
   Volume II: J-IRR, J-IIRR, J-VIII RR, J-12R, J-95RR, and J-373R

4. The following new Special Provision pages are included with this Addendum:
   Volume II: J-373A

5. The following revised Contract Drawings are included with this Addendum.
   Volume I: Drawings 5 thru 8, and 92.

6. The following revised Contract Drawings will be issued to the successful Bidder.
   Volume I: Drawings 9, 14

## CHANGES TO THE CONTRACT REQUIREMENTS

## CHANGES TO THE SCHEDULE OF PRICES

**SUMMARY OF REVISIONS TO PAY ITEM QUANTITIES**

| SP | PAY ITEM NUMBER | DESCRIPTION | UNITS | ORIGINAL QTY | CHANGE | NEW QTY |
|---|---|---|---|---|---|---|
| | 20400100 | BORROW EXCAVATION | CU YD | 45,350 | -3,990 | 41,360 |
| | 20400800 | FURNISHED EXCAVATION | CU YD | 75,772 | +11,340 | 87,112 |

* Indicates Special Provision
** Indicates Tollway Supplemental Specifications
*** Indicates IDOT Recurring Special Provision
BDE Indicates IDOT BDE Special Provision
GBSP Indicates IDOT Guide Bridge Special Provision

## CHANGES TO THE CONTRACT SPECIAL PROVISIONS

**Change No. 1**
Contract Requirements, Volume I, Replace Page A-1R with page A-1RR (attached)

This change contains the following revision:
1.1 The bid opening date was revised to June 25, 2019.
1.2 The Contract start date was revised to August 9, 2019.
1.3 The Date at the bottom left corner was revised to May 9, 2019.

**Change No. 2**
Contract Requirements, Volume I, Replace Page P-1R with page P-1RR (attached)

This change contains the following revision:
2.1 The bid opening date was revised to June 25, 2019.
2.2 Additional Addendum No. and Date entry fields were added.

**Change No. 3**
Contract Requirements, Volume I, Replace Page P-5RR with page P-5RRR (attached)

This change contains the following revision:
3.1 Schedule of Prices have been revised for the pay items and quantity revisions consistent with changes shown in the table above

**Change No. 4**
Contract Requirements, Volume II, Replace Pages J-IR, J-IIR, J-VIIIR with J-IRR, J-IIRR, and J-VIIIRR (attached).

This replacement contains the following revisions:
4.1 The table of contents have been revised consistent with this addendum.

**Change No. 5**
Contract Requirements, Volume II, Replace Page J-12 with J-12R (attached).

This replacement contains the following revisions:
5.1 Revised S.P. 104.1 Commencement of Work to be August 9, 2019.

**Change No. 6**
Contract Requirements, Volume II, Replace Page J-95R with J-95RR (attached).

This replacement contains the following revisions:
6.1 Revised S.P. 118 "Right-of-Way", to indicate the projected acquisition date for parcel TW-5-16-67; TW-5-16-068; and TW-5-16-070 is August 9, 2019.

**Change No. 7**
Contract Requirements, Volume II, Replace Page J-373 with J-373R and new page J-373A (attached).

This replacement contains the following revisions:
7.1 Revised SP ALLOWANCE FOR RAILROAD FLAGGING AND SERVICES to clarify elements included with railroad services and invoice and payment terms for these services. Also, the term "services" has been added in the Basis of Payment.

## CHANGES TO THE CONTRACT PLANS

**Change No. 8**
Contract Plans, Volume 1, Drawings 5 thru 8 (attached)

This change contains the following revisions:
8.1 Revised the suggested progress schedule to be consistent with revisions included in S.P. 104.

**Change No. 9**
Contract Plans, Volume 1, Drawing 9

This change contains the following revisions:
9.1 The summary of quantities has been revised to be consistent with Summary of Revisions to Pay Item Quantities table above.
Revised drawing to be issued to successful Bidder.

**Change No. 10**
Contract Plans, Volume 1, Drawing 14

This change contains the following revisions:
10.1 The earthwork schedule of quantities has been revised to be consistent with revisions included in this Addendum.
Revised drawing to be issued to successful Bidder.

**Change No. 11**
Contract Plans, Volume 1, Drawing 92 (attached)

This change contains the following revisions:
11.1 The quantity of borrow excavation has been revised in the Southeast Quadrant.

---

**END OF ADDENDUM CHANGES**

**THE ILLINOIS STATE TOLL HIGHWAY AUTHORITY**

**ADVERTISEMENT FOR SEALED BIDS**

**Bid Schedule and Information for**

**CONTRACT NO: I-18-4428**

Sealed Bids for the above numbered Contract as described below will be received by the Illinois Tollway at its offices, at 2700 Ogden Avenue, Downers Grove, Illinois 60515, until 10:30:00 a.m., local time, June 25, 2019, at which time the Bids will be opened and the bids read aloud.

An **optional pre-bid meeting** is scheduled for May 16, 2019 at the Central Administration Building in Downers Grove, at 2700 Ogden Avenue. The meeting will be held in Conference Room 175 at 10:00 AM.

The work to be done under this Contract shall be started on or about August 9, 2019. All work under this Contract shall be completed by July 29, 2022.

The work under this Contract shall consist of: Replacement of structure carrying the BNSF Railroad over the Tri-State Tollway (BN 261), Temporary shoo-fly structure carrying the BNSF Railroad over the Tri-State Tollway, Shoulder reconstruction and widening, Mainline pavement patching as necessary, Drainage improvements and culvert extensions, Temporary earth embankment supporting temporary railroad tracks, Ground improvements consisting of timber piling, Permanent and Temporary retaining walls, Erosion control measures and landscaping improvements, Temporary and permanent lighting, and Maintenance of Traffic.

The work under this Contract is to be performed on: the Tri-State (I-294) Tollway at Mile Post 26.6 in Cook County, Illinois.

Bidders may be required to be pre-qualified by the Illinois Department of Transportation (IDOT).

IDOT Prequalification required: ☒ YES ☐ NO  If 'NO', ignore any reference to IDOT Prequalification within the remainder of this document.

Joint Ventures shall be limited to no more than 3 individually IDOT-pre-qualified members.

Bidders are also required to be registered, or submit evidence of application, with the Illinois Department of Human Rights (IDHR). **There are NO EXCEPTIONS.**

Please note that written or oral communications received by the Illinois Tollway in connection with this solicitation may be required to be reported to the Procurement Policy Board as required by law. This provision is not intended to prohibit communications with State employees regarding a procurement matter, but rather only requires reporting of those communications when they occur.

All bids must be on forms prescribed by the Illinois Tollway and must comply with the terms and conditions set forth in the Contract Documents. Copies of the plans, special provisions, bid forms and other Contract Documents for this Contract are available from BHFX Digital Imaging and can be viewed and/or ordered for purchase by visiting the On-line Plan Room via www.illinoistollwaybidding.com. Copies of the current Illinois Tollway Supplemental Specifications to the Illinois Department of Transportation Standard Specifications for Road and Bridge Construction can be purchased directly from BHFX Digital Imaging. The current Illinois Tollway Supplemental Specifications may also be viewed in the 'Doing Business' section on the Tollway website. Current Illinois Department of Transportation Standard Specifications for Road and Bridge Construction, Supplemental Specifications and Recurring Special Provisions can be viewed and purchased from the Illinois Department of Transportation website. Electronic copies of the contract documents are also available on compact disk (CD) from BHFX Digital Imaging. Copies are in a portable document format (PDF). **Bidders with questions or in need of assistance in purchasing Contract Documents are to contact a** BHFX Digital Imaging, **Customer Service Representative at 630-393-0777, ask for the Plan Room.**

Questions pertaining to the intent of the Contract Documents may be sent to the Illinois Tollway, attention Mohamad Faraj @ mfaraj@getipass.com, to be received no later than 2:00 p.m. local time on May 24, 2019.

A completed Questionnaire and a statement of Current Contractual Obligations on forms supplied by the Illinois Tollway will be required from the apparent low Bidder once the apparent low Bidder is determined. Each Bid must be accompanied by a Bid Guaranty in the amount of five (5%) per cent of the total amount shown in the Bid for the Contract. The Bid Guaranty shall be in the form of an acceptable bid bond or a bank draft, certified check or cashier's check drawn on a solvent bank made payable to the Illinois State Toll Highway Authority.

Award of the above Contract, if any award be made, will be to the lowest responsive and responsible Bidder or Bidders. The Illinois Tollway reserves the right to reject any and all Bids, to waive technicalities, or cancel the solicitation.

***COPIES OF PLANS, SPECIAL PROVISIONS, BID FORMS, CONTRACT DOCUMENTS, STANDARD SPECIFICATIONS AND SUPPLEMENTAL SPECIFICATIONS ARE NOT AVAILABLE AT THE TOLLWAY CENTRAL ADMINISTRATION BUILDING.***

**DATE: May 9, 2019**

## THE ILLINOIS STATE TOLL HIGHWAY AUTHORITY

## BID

## CONTRACT NO. I-18-4428

Bids will be received by The Illinois State Toll Highway Authority at its offices, 2700 Ogden Avenue, Downers Grove, Illinois, 60515 until 10:30:00 a.m., local time, June 25th, 2019 and immediately thereafter publicly opened and read aloud.

TO THE CHAIRMAN OF THE ILLINOIS STATE TOLL HIGHWAY AUTHORITY:

The undersigned hereby proposes to perform: Replacement of structure carrying the BNSF Railroad over the Tri-State Tollway (BN 261), Temporary shoo-fly structure carrying the BNSF Railroad over the Tri-State Tollway, Shoulder reconstruction and widening, Mainline pavement patching as necessary, Drainage improvements and culvert extensions, Temporary earth embankment supporting temporary railroad tracks, Ground improvements consisting of timber piling, Permanent and Temporary retaining walls, Erosion control measures and landscaping improvements, Temporary and permanent lighting, and Maintenance of Traffic.

The services will be performed within the: Tri-State (I-294) Tollway at Mile Post 26.6 in Cook County, Illinois.

The undersigned declares that the Advertisement for Sealed Bids, Instructions to Bidders, this Bid Form, IDOT Standard Specifications, Tollway Supplemental Specifications, Special Provisions, Plans, Addenda to the foregoing (if any), form of Agreement, forms of Contract Bonds, and other exhibits (if any), on file at the office of The Illinois State Toll Highway Authority have been carefully examined, and that the undersigned has inspected in detail the site of the proposed Work, and familiarized itself with all of the conditions affecting the Contract, and that has satisfied itself as to The Work to be done and the conditions under which it must be carried out, and understands that in submitting this Bid waives all rights to plead any misunderstanding regarding the same.

The undersigned hereby tenders this Bid to construct and complete said Work in accordance with the Plans, IDOT Standard Specifications, Tollway Supplemental Specifications (if any), and the accompanying Special Provisions now on file in the office of The Illinois State Toll Highway Authority, and the following addenda issued thereto:

Addendum No. _____ Date_____

Addendum No. _____ Date_____

Addendum No. _____ Date_____

Addendum No. _____ Date_____

Addendum No. _____ Date _____

The undersigned further agrees to furnish all necessary transportation, machinery, equipment, tools, labor and other means of construction; and to do all the work and to furnish all of the materials specified in the Contract in the manner and at the times prescribed under the supervision and direction of the Authority or its authorized representatives, for the lump sums and unit prices quoted in the following Schedule of Prices:

THE ILLINOIS STATE TOLL HIGHWAY AUTHORITY (TOLLWAY)

CONTRACT NO. I-18-4428

BRIDGE RECONSTRUCTION (BN 261) BURLINGTON NORTHERN SANTA FE (BNSF) RAILWAY OVER

THE TRI-STATE TOLLWAY (I-294)

MILE POST 26.6

SCHEDULE OF PRICES

| SP | PAY ITEM NUMBER | DESIGNATION | UNIT | QUANTITY | UNIT PRICE DOLLAR | AMOUNT DOLLAR |
|---|---|---|---|---|---|---|
| * | 20100500 | TREE REMOVAL, ACRES | ACRE | 12.0 | | |
| | 20101100 | TREE TRUNK PROTECTION | EACH | 10 | | |
| * | 20200100 | EARTH EXCAVATION | CU YD | 109,456 | | |
| * | 20201200 | REMOVAL AND DISPOSAL OF UNSUITABLE MATERIAL | CU YD | 18,360 | | |
| | 20400100 | BORROW EXCAVATION | CU YD | 41,360 | | |
| | 20400800 | FURNISHED EXCAVATION | CU YD | 87,112 | | |
| | 20800150 | TRENCH BACKFILL | CU YD | 5,210 | | |
| | 20900110 | POROUS GRANULAR BACKFILL | CU YD | 5,018 | | |
| | 25000400 | NITROGEN FERTILIZER NUTRIENT | POUND | 475 | | |
| | 25000500 | PHOSPHORUS FERTILIZER NUTRIENT | POUND | 62 | | |
| | 25000600 | POTASSIUM FERTILIZER NUTRIENT | POUND | 1,162 | | |
| | 25100127 | MULCH, METHOD 3A | ACRE | 25.3 | | |
| | 25100630 | EROSION CONTROL BLANKET | SQ YD | 72,154 | | |
| | 25200100 | SODDING | SQ YD | 16,686 | | |
| | 25200110 | SODDING, SALT TOLERANT | SQ YD | 2,192 | | |
| | 25200200 | SUPPLEMENTAL WATERING | UNIT | 349 | | |
| | 28000250 | TEMPORARY EROSION CONTROL SEEDING | POUND | 2,520 | | |

## THE ILLINOIS STATE TOLL HIGHWAY AUTHORITY (TOLLWAY)

CONTRACT NO. I-18-4428

BRIDGE RECONSTRUCTION (BN 261) BURLINGTON NORTHERN SANTA FE (BNSF) RAILWAY OVER

THE TRI-STATE TOLLWAY (I-294)

MILE POST 26.6

SCHEDULE OF PRICES

| SP | PAY ITEM NUMBER | DESIGNATION | UNIT | QUANTITY | UNIT PRICE DOLLAR | AMOUNT DOLLAR |
|---|---|---|---|---|---|---|
| | 28100107 | STONE RIPRAP, CLASS A4 | SQ YD | 40 | | |
| | 28200200 | FILTER FABRIC | SQ YD | 708 | | |
| | 31100200 | SUBBASE GRANULAR MATERIAL, TYPE A | CU YD | 27 | | |
| | 31100500 | SUBBASE GRANULAR MATERIAL, TYPE A 6" | SQ YD | 1,866 | | |
| | 31101200 | SUBBASE GRANULAR MATERIAL, TYPE B 4" | SQ YD | 980 | | |
| | 31102000 | SUBBASE GRANULAR MATERIAL, TYPE C | CU YD | 12 | | |
| | 35102400 | AGGREGATE BASE COURSE, TYPE B 12" | SQ YD | 3,110 | | |
| | 40200700 | AGGREGATE SURFACE COURSE, TYPE A 8" | SQ YD | 1,441 | | |
| | 40201000 | AGGREGATE FOR TEMPORARY ACCESS | TON | 840 | | |
| | 40600275 | BITUMINOUS MATERIALS (PRIME COAT) | POUND | 6,998 | | |
| | 40600290 | BITUMINOUS MATERIALS (TACK COAT) | POUND | 1,875 | | |
| | 40600982 | HOT-MIX ASPHALT SURFACE REMOVAL - BUTT JOINT | SQ YD | 24 | | |
| | 40603085 | HOT-MIX ASPHALT BINDER COURSE, IL-19.0, N70 | TON | 348 | | |
| | 40603340 | HOT-MIX ASPHALT SURFACE COURSE, MIX "D", N70 | TON | 641 | | |
| | 42000060 | WELDED WIRE REINFORCEMENT | SQ YD | 24 | | |
| | 42000501 | PORTLAND CEMENT CONCRETE PAVEMENT 10" (JOINTED) | SQ YD | 203 | | |
| | 42001300 | PROTECTIVE COAT | SQ YD | 1,652 | | |

THE ILLINOIS STATE TOLL HIGHWAY AUTHORITY (TOLLWAY)

CONTRACT NO. I-18-4428

BRIDGE RECONSTRUCTION (BN 261) BURLINGTON NORTHERN SANTA FE (BNSF) RAILWAY OVER

THE TRI-STATE TOLLWAY (I-294)

MILE POST 26.6

SCHEDULE OF PRICES

| SP | PAY ITEM NUMBER | DESIGNATION | UNIT | QUANTITY | UNIT PRICE DOLLAR | AMOUNT DOLLAR |
|---|---|---|---|---|---|---|
| | 42400200 | PORTLAND CEMENT CONCRETE SIDEWALK 5 INCH | SQ FT | 8,824 | | |
| | 42400800 | DETECTABLE WARNINGS | SQ FT | 50 | | |
| | 44000100 | PAVEMENT REMOVAL | SQ YD | 4,527 | | |
| | 44000157 | HOT-MIX ASPHALT SURFACE REMOVAL, 2" | SQ YD | 11,652 | | |
| | 44000400 | GUTTER REMOVAL | FOOT | 501 | | |
| | 44000500 | COMBINATION CURB AND GUTTER REMOVAL | FOOT | 2,152 | | |
| | 44000600 | SIDEWALK REMOVAL | SQ FT | 4,950 | | |
| | 44001980 | CONCRETE BARRIER REMOVAL | FOOT | 395 | | |
| | 44004000 | PAVED DITCH REMOVAL | FOOT | 1,196 | | |
| | 44004250 | PAVED SHOULDER REMOVAL | SQ YD | 8,123 | | |
| | 44201747 | CLASS D PATCHES, TYPE IV, 8 INCH | SQ YD | 1,866 | | |
| * | 50100300 | REMOVAL OF EXISTING STRUCTURES NO. 1 | EACH | 1 | | |
| * | 50100400 | REMOVAL OF EXISTING STRUCTURES NO. 2 | EACH | 1 | | |
| | 50104400 | CONCRETE HEADWALL REMOVAL | EACH | 10 | | |
| | 50157300 | PROTECTIVE SHIELD | SQ YD | 1,980 | | |
| | 50200100 | STRUCTURE EXCAVATION | CU YD | 14,485 | | |
| * | 50201101 | COFFERDAM (TYPE 1) (LOCATION - 1) | EACH | 1 | | |

THE ILLINOIS STATE TOLL HIGHWAY AUTHORITY (TOLLWAY)

CONTRACT NO. I-18-4428

BRIDGE RECONSTRUCTION (BN 261) BURLINGTON NORTHERN SANTA FE (BNSF) RAILWAY OVER

THE TRI-STATE TOLLWAY (I-294)

MILE POST 26.6

SCHEDULE OF PRICES

| SP | PAY ITEM NUMBER | DESIGNATION | UNIT | QUANTITY | UNIT PRICE DOLLAR | AMOUNT DOLLAR |
|---|---|---|---|---|---|---|
| | 50300225 | CONCRETE STRUCTURES | CU YD | 651.9 | | |
| | 50401205 | PRECAST CONCRETE CAPS | EACH | 1,929 | | |
| * | 50500105 | FURNISHING AND ERECTING STRUCTURAL STEEL | L. SUM | 1 | | |
| | 50500505 | STUD SHEAR CONNECTORS | EACH | 1,985 | | |
| | 50800105 | REINFORCEMENT BARS | POUND | 490,410 | | |
| | 50800205 | REINFORCEMENT BARS, EPOXY COATED | POUND | 328,372 | | |
| | 50800515 | BAR SPLICERS | EACH | 193 | | |
| | 50901760 | PIPE HANDRAIL | FOOT | 248 | | |
| | 51200205 | FURNISHING UNTREATED PILES 30.1-45 FEET | FOOT | 65,238 | | |
| | 51200305 | FURNISHING UNTREATED PILES OVER 45 FEET | FOOT | 689 | | |
| | 51201900 | FURNISHING STEEL PILES HP14X89 | FOOT | 6,104 | | |
| | 51202305 | DRIVING PILES | FOOT | 72,031 | | |
| | 51202900 | TEST PILE TIMBER | EACH | 12 | | |
| | 51203900 | TEST PILE STEEL HP14X89 | EACH | 5 | | |
| | 51204650 | PILE SHOES | EACH | 108 | | |
| GBSP | 51602000 | PERMANENT CASING | FOOT | 1,941 | | |
| GBSP | 51603000 | DRILLED SHAFT IN SOIL | CU YD | 1,291 | | |

THE ILLINOIS STATE TOLL HIGHWAY AUTHORITY (TOLLWAY)

CONTRACT NO. I-18-4428

BRIDGE RECONSTRUCTION (BN 261) BURLINGTON NORTHERN SANTA FE (BNSF) RAILWAY OVER

THE TRI-STATE TOLLWAY (I-294)

MILE POST 26.6

SCHEDULE OF PRICES

| SP | PAY ITEM NUMBER | DESIGNATION | UNIT | QUANTITY | UNIT PRICE DOLLAR | AMOUNT DOLLAR |
|---|---|---|---|---|---|---|
| | 52100400 | STEEL BEARING ASSEMBLY | EACH | 16 | | |
| | 52200010 | TEMPORARY SHEET PILING | SQ FT | 4,027 | | |
| | 52200020 | TEMPORARY SOIL RETENTION SYSTEM | SQ FT | 13,726 | | |
| | 52200100 | FURNISHING SOLDIER PILES (HP SECTION) | FOOT | 951 | | |
| | 52200105 | FURNISHING SOLDIER PILES (W SECTION) | FOOT | 4,317 | | |
| | 52200200 | DRILLING AND SETTING SOLDIER PILES (IN SOIL) | CU FT | 35,675 | | |
| | 52200250 | UNTREATED TIMBER LAGGING | SQ FT | 8,547 | | |
| | 52200700 | PRECAST MODULAR RETAINING WALL | SQ FT | 20,719 | | |
| | 52200800 | SEGMENTAL CONCRETE BLOCK WALL | SQ FT | 3,912 | | |
| | 52200900 | CONCRETE STRUCTURES (RETAINING WALL) | CU YD | 602.7 | | |
| | 54001001 | BOX CULVERT END SECTIONS, CULVERT NO. 1 | EACH | 1 | | |
| | 54001003 | BOX CULVERT END SECTIONS, CULVERT NO. 3 | EACH | 1 | | |
| | 54001004 | BOX CULVERT END SECTIONS, CULVERT NO. 4 | EACH | 1 | | |
| | 54003000 | CONCRETE BOX CULVERTS | CU YD | 841.8 | | |
| | 54010605 | PRECAST CONCRETE BOX CULVERTS 6'X5' | FOOT | 562 | | |
| | 54248510 | CONCRETE COLLAR | CU YD | 6.4 | | |
| | 550A0070 | STORM SEWERS, CLASS A, TYPE 1 15" | FOOT | 152 | | |

THE ILLINOIS STATE TOLL HIGHWAY AUTHORITY (TOLLWAY)

CONTRACT NO. I-18-4428

BRIDGE RECONSTRUCTION (BN 261) BURLINGTON NORTHERN SANTA FE (BNSF) RAILWAY OVER

THE TRI-STATE TOLLWAY (I-294)

MILE POST 26.6

SCHEDULE OF PRICES

| SP | PAY ITEM NUMBER | DESIGNATION | UNIT | QUANTITY | UNIT PRICE DOLLAR | AMOUNT DOLLAR |
|---|---|---|---|---|---|---|
| | 550A0120 | STORM SEWERS, CLASS A, TYPE 1 24" | FOOT | 58 | | |
| | 550A0190 | STORM SEWERS, CLASS A, TYPE 1 48" | FOOT | 55 | | |
| | 550A0340 | STORM SEWERS, CLASS A, TYPE 2 12" | FOOT | 88 | | |
| | 550A0360 | STORM SEWERS, CLASS A, TYPE 2 15" | FOOT | 1,927 | | |
| | 550A0380 | STORM SEWERS, CLASS A, TYPE 2 18" | FOOT | 236 | | |
| | 550A0410 | STORM SEWERS, CLASS A, TYPE 2 24" | FOOT | 202 | | |
| | 550A0430 | STORM SEWERS, CLASS A, TYPE 2 30" | FOOT | 1,033 | | |
| | 550A0470 | STORM SEWERS, CLASS A, TYPE 2 42" | FOOT | 1,920 | | |
| | 550A0480 | STORM SEWERS, CLASS A, TYPE 2 48" | FOOT | 392 | | |
| | 550A5500 | STORM SEWERS, CLASS A, TYPE 2 EQUIVALENT ROUND-SIZE 42" | FOOT | 9 | | |
| | 55100200 | STORM SEWER REMOVAL 6" | FOOT | 41 | | |
| | 55100400 | STORM SEWER REMOVAL 10" | FOOT | 162 | | |
| | 55100500 | STORM SEWER REMOVAL 12" | FOOT | 97 | | |
| | 55100700 | STORM SEWER REMOVAL 15" | FOOT | 1,074 | | |
| | 55100900 | STORM SEWER REMOVAL 18" | FOOT | 44 | | |
| | 55101200 | STORM SEWER REMOVAL 24" | FOOT | 1,175 | | |
| | 55101600 | STORM SEWER REMOVAL 36" | FOOT | 103 | | |

THE ILLINOIS STATE TOLL HIGHWAY AUTHORITY (TOLLWAY)

CONTRACT NO. I-18-4428

BRIDGE RECONSTRUCTION (BN 261) BURLINGTON NORTHERN SANTA FE (BNSF) RAILWAY OVER

THE TRI-STATE TOLLWAY (I-294)

MILE POST 26.6

SCHEDULE OF PRICES

| SP | PAY ITEM NUMBER | DESIGNATION | UNIT | QUANTITY | UNIT PRICE DOLLAR | AMOUNT DOLLAR |
|---|---|---|---|---|---|---|
| | 55101800 | STORM SEWER REMOVAL 42" | FOOT | 526 | | |
| | 55101900 | STORM SEWER REMOVAL 48" | FOOT | 8 | | |
| | 56100900 | WATER MAIN 12" | FOOT | 1,818 | | |
| | 58700300 | CONCRETE SEALER | SQ FT | 11,810 | | |
| | 59100100 | GEOCOMPOSITE WALL DRAIN | SQ YD | 3,613 | | |
| | 60200105 | CATCH BASINS, TYPE A, 4'-DIAMETER, TYPE 1 FRAME, OPEN LID | EACH | 10 | | |
| | 60200305 | CATCH BASINS, TYPE A, 4'-DIAMETER, TYPE 3 FRAME AND GRATE | EACH | 8 | | |
| | 60200805 | CATCH BASINS, TYPE A, 4'-DIAMETER, TYPE 8 GRATE | EACH | 4 | | |
| | 60203805 | CATCH BASINS, TYPE A, 5'-DIAMETER, TYPE 1 FRAME, OPEN LID | EACH | 2 | | |
| | 60206905 | CATCH BASINS, TYPE C, TYPE 1 FRAME, OPEN LID | EACH | 2 | | |
| | 60218400 | MANHOLES, TYPE A, 4'-DIAMETER, TYPE 1 FRAME, CLOSED LID | EACH | 4 | | |
| | 60221100 | MANHOLES, TYPE A, 5'-DIAMETER, TYPE 1 FRAME, CLOSED LID | EACH | 2 | | |
| | 60223700 | MANHOLES, TYPE A, 6'-DIAMETER, TYPE 1 FRAME, OPEN LID | EACH | 4 | | |
| | 60223800 | MANHOLES, TYPE A, 6'-DIAMETER, TYPE 1 FRAME, CLOSED LID | EACH | 5 | | |
| | 60224446 | MANHOLES, TYPE A, 7'-DIAMETER, TYPE 1 FRAME, CLOSED LID | EACH | 4 | | |
| | 60224459 | MANHOLES, TYPE A, 8'-DIAMETER, TYPE 1 FRAME, CLOSED LID | EACH | 4 | | |
| | 60224469 | MANHOLES, TYPE A, 9'-DIAMETER, TYPE 1 FRAME, CLOSED LID | EACH | 5 | | |

THE ILLINOIS STATE TOLL HIGHWAY AUTHORITY (TOLLWAY)

CONTRACT NO. I-18-4428

BRIDGE RECONSTRUCTION (BN 261) BURLINGTON NORTHERN SANTA FE (BNSF) RAILWAY OVER

THE TRI-STATE TOLLWAY (I-294)

MILE POST 26.6

SCHEDULE OF PRICES

| SP | PAY ITEM NUMBER | DESIGNATION | UNIT | QUANTITY | UNIT PRICE DOLLAR | AMOUNT DOLLAR |
|---|---|---|---|---|---|---|
| | 60248900 | VALVE VAULTS, TYPE A, 5'-DIAMETER, TYPE 1 FRAME, CLOSED LID | EACH | 2 | | |
| | 60250200 | CATCH BASINS TO BE ADJUSTED | EACH | 1 | | |
| | 60253100 | CATCH BASINS TO BE RECONSTRUCTED WITH NEW TYPE 1 FRAME, CLOSED LID | EACH | 2 | | |
| | 60255800 | MANHOLES TO BE ADJUSTED WITH NEW TYPE 1 FRAME, CLOSED LID | EACH | 1 | | |
| | 60258100 | MANHOLES TO BE RECONSTRUCTED WITH NEW TYPE 1 FRAME, OPEN LID | EACH | 1 | | |
| | 60258200 | MANHOLES TO BE RECONSTRUCTED WITH NEW TYPE 1 FRAME, CLOSED LID | EACH | 2 | | |
| | 60300305 | FRAMES AND LIDS TO BE ADJUSTED | EACH | 3 | | |
| | 60406000 | FRAMES AND LIDS, TYPE 1, OPEN LID | EACH | 3 | | |
| | 60500040 | REMOVING MANHOLES | EACH | 17 | | |
| | 60500050 | REMOVING CATCH BASINS | EACH | 22 | | |
| | 60500060 | REMOVING INLETS | EACH | 1 | | |
| | 60500105 | FILLING MANHOLES | EACH | 1 | | |
| | 60600095 | CLASS SI CONCRETE (OUTLET) | CU YD | 8.0 | | |
| | 60603800 | COMBINATION CONCRETE CURB AND GUTTER, TYPE B-6.12 | FOOT | 2,900 | | |
| | 63200310 | GUARDRAIL REMOVAL | FOOT | 902 | | |

THE ILLINOIS STATE TOLL HIGHWAY AUTHORITY (TOLLWAY)

CONTRACT NO. I-18-4428

BRIDGE RECONSTRUCTION (BN 261) BURLINGTON NORTHERN SANTA FE (BNSF) RAILWAY OVER

THE TRI-STATE TOLLWAY (I-294)

MILE POST 26.6

SCHEDULE OF PRICES

| SP | PAY ITEM NUMBER | DESIGNATION | UNIT | QUANTITY | UNIT PRICE DOLLAR | AMOUNT DOLLAR |
|---|---|---|---|---|---|---|
| | 66900530 | SOIL DISPOSAL ANALYSIS | EACH | 200 | | |
| BDE | 70300904 | PAVEMENT MARKING TAPE, TYPE IV 4" | FOOT | 94,077 | | |
| | 70600280 | IMPACT ATTENUATORS, TEMPORARY (SEVERE USE,NARROW), TEST LEVEL 3 | EACH | 8 | | |
| | 70600370 | IMPACT ATTENUATORS, RELOCATE (SEVERE USE, NARROW), TEST LEVEL 3 | EACH | 82 | | |
| | 72100100 | SIGN PANEL OVERLAY | SQ FT | 22 | | |
| | 72400200 | REMOVE SIGN PANEL ASSEMBLY - TYPE B | EACH | 1 | | |
| | 72400330 | REMOVE SIGN PANEL - TYPE 3 | SQ FT | 96 | | |
| | 72400720 | RELOCATE SIGN PANEL - TYPE 2 | SQ FT | 20 | | |
| | 72400730 | RELOCATE SIGN PANEL - TYPE 3 | SQ FT | 96 | | |
| | 72700100 | STRUCTURAL STEEL SIGN SUPPORT - BREAKAWAY | POUND | 912 | | |
| | 73000100 | WOOD SIGN SUPPORT | FOOT | 18 | | |
| | 73400100 | CONCRETE FOUNDATIONS | CU YD | 2.4 | | |
| | 73700100 | REMOVE GROUND MOUNTED SIGN SUPPORT | EACH | 2 | | |
| | 73700200 | REMOVE CONCRETE FOUNDATION - GROUND MOUNT | EACH | 2 | | |
| | 78000100 | THERMOPLASTIC PAVEMENT MARKING - LETTERS AND SYMBOLS | SQ FT | 7.0 | | |
| | 78000200 | THERMOPLASTIC PAVEMENT MARKING - LINE 4" | FOOT | 2,090 | | |
| | 78000600 | THERMOPLASTIC PAVEMENT MARKING - LINE 12" | FOOT | 66 | | |

THE ILLINOIS STATE TOLL HIGHWAY AUTHORITY (TOLLWAY)

CONTRACT NO. I-18-4428

BRIDGE RECONSTRUCTION (BN 261) BURLINGTON NORTHERN SANTA FE (BNSF) RAILWAY OVER

THE TRI-STATE TOLLWAY (I-294)

MILE POST 26.6

SCHEDULE OF PRICES

| SP | PAY ITEM NUMBER | DESIGNATION | UNIT | QUANTITY | UNIT PRICE DOLLAR | AMOUNT DOLLAR |
|---|---|---|---|---|---|---|
| | 78005110 | EPOXY PAVEMENT MARKING - LINE 4" | FOOT | 12,544 | | |
| | 78005130 | EPOXY PAVEMENT MARKING - LINE 6" | FOOT | 9,408 | | |
| | 78005150 | EPOXY PAVEMENT MARKING - LINE 12" | FOOT | 1,111 | | |
| | 81028180 | UNDERGROUND CONDUIT, GALVANIZED STEEL, 1 1/4" DIA. | FOOT | 6 | | |
| | 81028210 | UNDERGROUND CONDUIT, GALVANIZED STEEL, 2 1/2" DIA. | FOOT | 138 | | |
| | 81028730 | UNDERGROUND CONDUIT, COILABLE NONMETALLIC CONDUIT, 1 1/4" DIA. | FOOT | 729 | | |
| | 81702110 | ELECTRIC CABLE IN CONDUIT, 600V (XLP-TYPE USE) 1/C NO. 10 | FOOT | 549 | | |
| | 81702130 | ELECTRIC CABLE IN CONDUIT, 600V (XLP-TYPE USE) 1/C NO. 6 | FOOT | 1,617 | | |
| | 81800330 | AERIAL CABLE, 3-1/C NO. 6 WITH MESSENGER WIRE | FOOT | 1,600 | | |
| | 81800400 | AERIAL CABLE, 4-1/C NO. 2 WITH MESSENGER WIRE | FOOT | 2,648 | | |
| | 83600200 | LIGHT POLE FOUNDATION, 24" DIAMETER | FOOT | 53 | | |
| | 84200600 | REMOVAL OF LIGHTING UNIT, NO SALVAGE | EACH | 4 | | |
| | 84200804 | REMOVAL OF POLE FOUNDATION | EACH | 4 | | |
| | 87900100 | DRILL EXISTING FOUNDATION | EACH | 2 | | |
| * | X0300015 | CONCRETE WINGWALL REMOVAL | EACH | 4 | | |
| GBSP | X0320051 | CROSSHOLE SONIC LOGGING ACCESS DUCTS | FOOT | 9,070 | | |
| GBSP | X0320052 | CROSSHOLE SONIC LOGGING TESTING | EACH | 3 | | |
| * | X0322584 | REVETMENT MAT REMOVAL | SQ YD | 333 | | |

## THE ILLINOIS STATE TOLL HIGHWAY AUTHORITY (TOLLWAY)

CONTRACT NO. I-18-4428

BRIDGE RECONSTRUCTION (BN 261) BURLINGTON NORTHERN SANTA FE (BNSF) RAILWAY OVER

THE TRI-STATE TOLLWAY (I-294)

MILE POST 26.6

SCHEDULE OF PRICES

| SP | PAY ITEM NUMBER | DESIGNATION | UNIT | QUANTITY | UNIT PRICE DOLLAR | AMOUNT DOLLAR |
|---|---|---|---|---|---|---|
| * | X0322916 | PROPOSED STORM SEWER CONNECTION TO EXISTING STORM SEWER | EACH | 1 | | |
| * | X0322917 | PROPOSED STORM SEWER CONNECTION TO EXISTING MANHOLE | EACH | 3 | | |
| * | X0322924 | RETAINING WALL REMOVAL | SQ FT | 589 | | |
| * | X0324761 | DRAINAGE SYSTEM (SPECIAL) | L SUM | 1 | | |
| * | X0325110 | BIAXIAL GEOGRID | SQ YD | 18,724 | | |
| * | X0325815 | REMOVE EXISTING CABLE | FOOT | 364 | | |
| * | X0326801 | COMBINED SEWERS TO BE CLEANED | FOOT | 1,275 | | |
| * | X0326804 | COMBINED SEWER REMOVAL 42" | FOOT | 607 | | |
| * | X0326998 | FURNISH AND INSTALL HANDRAIL | FOOT | 1,270 | | |
| * | X0327141 | LIGHTING STANDARD, TYPE 4A | EACH | 2 | | |
| * | X0327142 | LIGHTING STANDARD, TYPE 4B | EACH | 2 | | |
| * | X0327149 | RELOCATE BENCH | EACH | 1 | | |
| * | X0327267 | SLOPE INCLINOMETER | EACH | 2 | | |
| * | X0327357 | CONSTRUCTION VIBRATION MONITORING | L SUM | 1 | | |
| * | X0327754 | TEMPORARY BULKHEAD | EACH | 6 | | |
| * | X0795800 | COARSE AGGREGATE | TON | 12,837 | | |
| * | X0800003 | COARSE AGGREGATE BACKFILL (SPECIAL) | CU YD | 2,110 | | |

## THE ILLINOIS STATE TOLL HIGHWAY AUTHORITY (TOLLWAY)

CONTRACT NO. I-18-4428

BRIDGE RECONSTRUCTION (BN 261) BURLINGTON NORTHERN SANTA FE (BNSF) RAILWAY OVER

THE TRI-STATE TOLLWAY (I-294)

MILE POST 26.6

SCHEDULE OF PRICES

| SP | PAY ITEM NUMBER | DESIGNATION | UNIT | QUANTITY | UNIT PRICE DOLLAR | AMOUNT DOLLAR |
|---|---|---|---|---|---|---|
| GBSP | X0900064 | MEMBRANE WATERPROOFING SYSTEM FOR BURIED STRUCTURES | SQ YD | 2,542 | | |
| * | X1200080 | STORM SEWERS JACKED IN PLACE, 48" (SPECIAL) | FOOT | 296 | | |
| * | X1200140 | PRECAST CONCRETE BOX CULVERT (SPECIAL) | FOOT | 1,043 | | |
| * | X2200003 | FENCE (SPECIAL) | FOOT | 1,930 | | |
| * | X5030225 | CONCRETE STRUCTURES (SPECIAL) | CU YD | 36 | | |
| * | X5210015 | ELASTOMERIC BEARING ASSEMBLY, TYPE I (SPECIAL) | EACH | 64 | | |
| * | X5210025 | ELASTOMERIC BEARING ASSEMBLY, TYPE II (SPECIAL) | EACH | 16 | | |
| * | X5537500 | STORM SEWERS TO BE CLEANED 6" | FOOT | 167 | | |
| * | X5538000 | STORM SEWERS TO BE CLEANED 18" | FOOT | 63 | | |
| * | X5538400 | STORM SEWERS TO BE CLEANED 30" | FOOT | 272 | | |
| * | X5610651 | ABANDON EXISTING WATER MAIN, FILL WITH CLSM | FOOT | 1,793 | | |
| * | X6020293 | MANHOLES, TYPE A, 8'-DIAMETER, WITH 2 TYPE 1 FRAME, CLOSED LID, RESTRICTOR PLATE | EACH | 1 | | |
| * | X6020710 | CATCH BASIN TO BE ADJUSTED WITH SPECIAL FRAME AND GRATE | EACH | 2 | | |
| * | X6022850 | MANHOLE, SANITARY, 8' DIAMETER, TYPE 1 FRAME, CLOSED LID | EACH | 2 | | |
| * | X6022900 | CATCH BASINS TO BE RECONSTRUCTED (SPECIAL) | EACH | 2 | | |
| * | X6024200 | MANHOLES, TYPE A, 6'-DIAMETER, TYPE 1 FRAME, CLOSED LID, SPECIAL | EACH | 1 | | |
| * | X6026051 | SANITARY MANHOLES TO BE RECONSTRUCTED | EACH | 1 | | |
| * | X6026054 | SANITARY MANHOLES TO BE REMOVED | EACH | 2 | | |

## THE ILLINOIS STATE TOLL HIGHWAY AUTHORITY (TOLLWAY)

CONTRACT NO. I-18-4428

BRIDGE RECONSTRUCTION (BN 261) BURLINGTON NORTHERN SANTA FE (BNSF) RAILWAY OVER

THE TRI-STATE TOLLWAY (I-294)

MILE POST 26.6

SCHEDULE OF PRICES

| SP | PAY ITEM NUMBER | DESIGNATION | UNIT | QUANTITY | UNIT PRICE DOLLAR | AMOUNT DOLLAR |
|---|---|---|---|---|---|---|
| * | X6028000 | MANHOLES TO BE RECONSTRUCTED (SPECIAL) | EACH | 1 | | |
| * | X6040205 | FRAMES AND LIDS, SPECIAL | EACH | 2 | | |
| * | X6640050 | CHAIN LINK FENCE, 42" ATTACHED TO STRUCTURE (SPECIAL) | FOOT | 1,683 | | |
| * | X6640312 | CHAIN LINK GATES TO BE REMOVED AND RE-ERECTED | EACH | 2 | | |
| * | X7015005 | CHANGEABLE MESSAGE SIGN | CAL DAY | 365 | | |
| BDE | X7030005 | TEMPORARY PAVEMENT MARKING REMOVAL | SQ FT | 31,359 | | |
| * | X7200053 | REMOVE, STORE AND RE-ERECT SIGN PANEL (SPECIAL) | EACH | 29 | | |
| * | X7330086 | FURNISH AND INSTALL WALKWAY | FOOT | 3,917 | | |
| * | X8140106 | HANDHOLE (SPECIAL) | EACH | 2 | | |
| * | X8300001 | LIGHT POLE, SPECIAL | EACH | 2 | | |
| * | X8950130 | MODIFY EXISTING LIGHTING CONTROLLER | EACH | 1 | | |
| * | XX004360 | SANITARY SEWER BYPASS PUMPING | L SUM | 1 | | |
| * | Z0022800 | FENCE REMOVAL | FOOT | 644 | | |
| * | Z0033024 | MAINTAIN EXISTING LIGHTING SYSTEM | L SUM | 1 | | |
| * | Z0040000 | PIEZOMETER | EACH | 4 | | |
| * | Z0040530 | PIPE UNDERDRAIN REMOVAL | FOOT | 2,112 | | |
| GBSP | Z0046304 | PIPE UNDERDRAIN FOR STRUCTURES 4" | FOOT | 1,474 | | |

THE ILLINOIS STATE TOLL HIGHWAY AUTHORITY (TOLLWAY)

CONTRACT NO. I-18-4428

BRIDGE RECONSTRUCTION (BN 261) BURLINGTON NORTHERN SANTA FE (BNSF) RAILWAY OVER

THE TRI-STATE TOLLWAY (I-294)

MILE POST 26.6

SCHEDULE OF PRICES

| SP | PAY ITEM NUMBER | DESIGNATION | UNIT | QUANTITY | UNIT PRICE DOLLAR | AMOUNT DOLLAR |
|---|---|---|---|---|---|---|
| GBSP | Z0046306 | PIPE UNDERDRAIN FOR STRUCTURES 6" | FOOT | 414 | | |
| * | Z0056648 | STORM SEWERS, TYPE 1, WATER MAIN QUALITY PIPE, 12" | FOOT | 33 | | |
| * | Z0056650 | STORM SEWERS, TYPE 1, WATER MAIN QUALITY PIPE, 15" | FOOT | 36 | | |
| * | Z0056668 | STORM SEWERS, TYPE 2, WATER MAIN QUALITY PIPE, 12" | FOOT | 67 | | |
| * | Z0056670 | STORM SEWERS, TYPE 2, WATER MAIN QUALITY PIPE, 18" | FOOT | 49 | | |
| * | Z0057950 | SANITARY SEWER 42" | FOOT | 615 | | |
| * | Z0065100 | SETTLEMENT PLATFORMS | EACH | 7 | | |
| * | Z0075400 | TIE RODS | EACH | 43 | | |
| * | Z0075496 | CONCRETE RETAINING WALL REMOVAL | FOOT | 1,171 | | |
| * | JI211110 | TOPSOIL EXCAVATION AND PLACEMENT | CU YD | 1,000 | | |
| * | JI211112 | TOPSOIL EXCAVATION AND DISPOSAL | CU YD | 18,380 | | |
| * | JI211126 | TOPSOIL FURNISH AND PLACE, 6" | SQ YD | 74,346 | | |
| * | JI213004 | EXPLORATION TRENCH, UTILITIES (HAND EXCAVATION) | FOOT | 100 | | |
| * | JI213006 | EXPLORATION TRENCH, UTILITIES (VACUUM EXCAVATION) | FOOT | 100 | | |
| * | JI406107 | ASPHALT TACK COAT | POUND | 4,475 | | |
| * | JI406510 | WARM-MIX ASPHALT SURFACE COURSE, MIX "D", N70 | TON | 1,012 | | |
| * | JI408100 | ASPHALT DAMP PROOFING | SQ YD | 903 | | |

THE ILLINOIS STATE TOLL HIGHWAY AUTHORITY (TOLLWAY)

CONTRACT NO. I-18-4428

BRIDGE RECONSTRUCTION (BN 261) BURLINGTON NORTHERN SANTA FE (BNSF) RAILWAY OVER

THE TRI-STATE TOLLWAY (I-294)

MILE POST 26.6

SCHEDULE OF PRICES

| SP | PAY ITEM NUMBER | DESIGNATION | UNIT | QUANTITY | UNIT PRICE DOLLAR | AMOUNT DOLLAR |
|---|---|---|---|---|---|---|
| * | JI420900 | DRILL AND GROUT #6 TIE BARS | EACH | 93 | | |
| * | JI440010 | CONCRETE MEDIAN BARRIER AND BASE REMOVAL | FOOT | 653 | | |
| * | JI481060 | AGGREGATE SHOULDERS, TYPE B 4" | SQ YD | 14 | | |
| * | JI481070 | AGGREGATE SHOULDERS, SPECIAL TYPE C | TON | 86 | | |
| * | JI481130 | AGGREGATE SHOULDERS WITH FILTER FABRIC, TYPE B 4" | SQ YD | 701 | | |
| * | JI482112 | WARM-MIX ASPHALT SHOULDERS (9 IN.) | SQ YD | 9,221 | | |
| * | JI503230 | MASS CONCRETE STRUCTURES | CU YD | 450.4 | | |
| * | JI542010 | END SECTION REMOVAL | EACH | 2 | | |
| * | JI580001 | RAILROAD DECK WATERPROOFING | SQ FT | 18,884 | | |
| * | JI593030 | ABANDON AND FILL EXISTING STORM SEWER | CU YD | 152 | | |
| * | JI601215 | SLOPE DRAIN, 15" | FOOT | 89 | | |
| * | JI601300 | PIPE UNDERDRAINS, 6" (SPECIAL) | FOOT | 16 | | |
| * | JI601320 | PIPE UNDERDRAINS, FABRIC LINED TRENCH 6" | FOOT | 2,469 | | |
| * | JI602117 | CATCH BASINS, TYPE G-2, TYPE G-2 MODIFIED FRAME AND GRATE | EACH | 14 | | |
| * | JI602184 | CATCH BASINS, TYPE A, 4'-DIAMETER, TYPE 20A FRAME AND GRATE | EACH | 2 | | |
| * | JI602367 | MANHOLE, TYPE A, 10'-DIAMETER, TYPE 20A FRAME AND GRATE | EACH | 4 | | |
| * | JI602368 | MANHOLE, TYPE A, 10'-DIAMETER, WITH TWO TYPE 1 FRAME, CLOSED LID, RESTRICTOR PLATE | EACH | 1 | | |

THE ILLINOIS STATE TOLL HIGHWAY AUTHORITY (TOLLWAY)

CONTRACT NO. I-18-4428

BRIDGE RECONSTRUCTION (BN 261) BURLINGTON NORTHERN SANTA FE (BNSF) RAILWAY OVER

THE TRI-STATE TOLLWAY (I-294)

MILE POST 26.6

SCHEDULE OF PRICES

| SP | PAY ITEM NUMBER | DESIGNATION | UNIT | QUANTITY | UNIT PRICE DOLLAR | AMOUNT DOLLAR |
|---|---|---|---|---|---|---|
| * | JI602791 | JUNCTION CHAMBER, LOCATION 1 | EACH | 1 | | |
| * | JI606015 | GUTTER, TYPE G-2, MODIFIED | FOOT | 2,875 | | |
| * | JI606020 | GUTTER, TYPE G-3 | FOOT | 471 | | |
| * | JI630002 | GALVANIZED STEEL PLATE BEAM GUARDRAIL, TYPE A, 6 FOOT POSTS | FOOT | 1,225 | | |
| * | JI631110 | TRAFFIC BARRIER TERMINAL, TYPE T1 (SPECIAL) TANGENT | EACH | 1 | | |
| * | JI631120 | TRAFFIC BARRIER TERMINAL, TYPE T2 | EACH | 3 | | |
| * | JI631135 | TRAFFIC BARRIER TERMINAL, TYPE T6B | EACH | 1 | | |
| * | JI637001 | CONCRETE BARRIER BASE | FOOT | 630 | | |
| * | JI637003 | CONCRETE BARRIER, DOUBLE FACE, 42 INCH | FOOT | 512 | | |
| * | JI664305 | RIGHT-OF-WAY FENCE, TYPE 1, 6' | FOOT | 3,150 | | |
| * | JI664310 | CORNER POST, RIGHT-OF-WAY FENCE, TYPE 1 | EACH | 9 | | |
| * | JI664315 | PULL POST, RIGHT-OF-WAY FENCE, TYPE 1 | EACH | 15 | | |
| * | JI664320 | END POST, RIGHT-OF-WAY FENCE, TYPE 1 | EACH | 11 | | |
| * | JI664325 | PEDESTRIAN GATE, RIGHT-OF-WAY FENCE, TYPE 1 | EACH | 5 | | |
| * | JI664400 | RIGHT OF WAY FENCE REMOVAL | FOOT | 4,596 | | |
| * | JI664620 | TEMPORARY CHAIN LINK FENCE 8' SCREENING, TYPE 2 | FOOT | 7,278 | | |
| * | JI669010 | REGULATED SUBSTANCES PRE-CONSTRUCTION PLAN | L SUM | 1 | | |
| * | JI669015 | ON-SITE MONITORING OF REGULATED SUBSTANCES | CAL DAY | 600 | | |
| * | JI669020 | REGULATED SUBSTANCES FINAL CONSTRUCTION REPORT | L SUM | 1 | | |
| * | JI680004 | HEADWALL TYPE I, 24" | EACH | 1 | | |

THE ILLINOIS STATE TOLL HIGHWAY AUTHORITY (TOLLWAY)

CONTRACT NO. I-18-4428

BRIDGE RECONSTRUCTION (BN 261) BURLINGTON NORTHERN SANTA FE (BNSF) RAILWAY OVER

THE TRI-STATE TOLLWAY (I-294)

MILE POST 26.6

SCHEDULE OF PRICES

| SP | PAY ITEM NUMBER | DESIGNATION | UNIT | QUANTITY | UNIT PRICE DOLLAR | AMOUNT DOLLAR |
|---|---|---|---|---|---|---|
| * | JI680011 | HEADWALL TYPE II, 48" | EACH | 1 | | |
| * | JI680122 | SLOPED HEADWALL TYPE III, 15", 1:3 | EACH | 2 | | |
| * | JI680125 | SLOPED HEADWALL TYPE III, 24", 1:3 | EACH | 3 | | |
| * | JI680127 | SLOPED HEADWALL TYPE III, 30", 1:3 | EACH | 1 | | |
| * | JI680140 | SLOPED HEADWALL TYPE III, 6", 1:6 | EACH | 2 | | |
| * | JI680141 | SLOPED HEADWALL TYPE III, 12", 1:6 | EACH | 1 | | |
| * | JI704000 | TEMPORARY CONCRETE BARRIER | FOOT | 6,113 | | |
| * | JI704005 | RELOCATE TEMPORARY CONCRETE BARRIER | FOOT | 58,013 | | |
| * | JI725000 | TERMINAL MARKER - DIRECT APPLIED | EACH | 1 | | |
| * | JI781010 | RAISED PAVEMENT LANE MARKER, REFLECTOR | EACH | 378 | | |
| * | JI782014 | GUARDRAIL BARRIER REFLECTORS, TYPE B | EACH | 13 | | |
| * | JI782022 | BARRIER WALL REFLECTORS, TYPE C | EACH | 141 | | |
| * | JI811276 | CONDUIT ATTACHED TO STRUCTURE, 2" DIA., STAINLESS STEEL | FOOT | 20 | | |
| * | JI830210 | TEMPORARY WOOD POLE, 90 FEET, CLASS 2, TO REMAIN IN PLACE | EACH | 2 | | |
| ** | JS107360 | DUST CONTROL WATERING | UNIT | 330 | | |
| ** | JS120100 | TRAILER MOUNTED FULL MATRIX PORTABLE CHANGEABLE MESSAGE SIGNS | EACH | 2.0 | | |
| ** | JS250220 | SEEDING, CLASS 2E | ACRE | 0.7 | | |

THE ILLINOIS STATE TOLL HIGHWAY AUTHORITY (TOLLWAY)

CONTRACT NO. I-18-4428

BRIDGE RECONSTRUCTION (BN 261) BURLINGTON NORTHERN SANTA FE (BNSF) RAILWAY OVER

THE TRI-STATE TOLLWAY (I-294)

MILE POST 26.6

SCHEDULE OF PRICES

| SP | PAY ITEM NUMBER | DESIGNATION | UNIT | QUANTITY | UNIT PRICE DOLLAR | AMOUNT DOLLAR |
|---|---|---|---|---|---|---|
| ** | JS250314 | SEEDING, CLASS 4B | ACRE | 0.6 | | |
| ** | JS250318 | SEEDING, CLASS 4F | ACRE | 10.2 | | |
| ** | JS250320 | SEEDING, CLASS 5 | ACRE | 10.2 | | |
| ** | JS250324 | SEEDING, CLASS 5B | ACRE | 0.6 | | |
| ** | JS280020 | MANAGEMENT OF EROSION AND SEDIMENT CONTROL | CAL. MO. | 33 | | |
| ** | JS280040 | EROSION AND SEDIMENT CONTROL-CLEANOUT | CU YD | 50 | | |
| ** | JS280050 | SILT FENCE | FOOT | 7,515 | | |
| ** | JS280051 | RE-ERECT SILT FENCE | FOOT | 1,500 | | |
| ** | JS280070 | STABILIZED CONSTRUCTION ENTRANCE | SQ YD | 2,131 | | |
| ** | JS280080 | FLOTATION BOOM | FOOT | 200 | | |
| ** | JS280100 | SUPER SILT FENCE | FOOT | 608 | | |
| ** | JS280120 | TREE PROTECTION | FOOT | 500 | | |
| ** | JS280140 | TEMPORARY RIPRAP | TON | 108 | | |
| ** | JS280151 | SAME-DAY STABILIZATION | SQ YD | 40,366 | | |
| ** | JS280180 | RECTANGULAR INLET PROTECTION | EACH | 6 | | |
| ** | JS280205 | FILTER FABRIC INLET PROTECTION, COVER TYPE | EACH | 12 | | |
| ** | JS280210 | FILTER FABRIC INLET PROTECTION, BASKET TYPE | EACH | 54 | | |

THE ILLINOIS STATE TOLL HIGHWAY AUTHORITY (TOLLWAY)

CONTRACT NO. I-18-4428

BRIDGE RECONSTRUCTION (BN 261) BURLINGTON NORTHERN SANTA FE (BNSF) RAILWAY OVER

THE TRI-STATE TOLLWAY (I-294)

MILE POST 26.6

SCHEDULE OF PRICES

| SP | PAY ITEM NUMBER | DESIGNATION | UNIT | QUANTITY | UNIT PRICE DOLLAR | AMOUNT DOLLAR |
|---|---|---|---|---|---|---|
| ** | JS280305 | TEMPORARY DITCH CHECKS | FOOT | 1,000 | | |
| * | JS670CSP | FIELD OFFICE, TYPE C (SPECIAL) | CAL MO | 36 | | |
| ** | JS671020 | MOBILIZATION, TOLLWAY (MODIFIED) | L SUM | 1 | | |
| * | JS701010 | MAINTENANCE OF TRAFFIC | L SUM | 1 | | |
| ** | JS810242 | CONDUIT ENCASED IN CONCRETE, 6" DIA. PVC | FOOT | 208 | | |
| ** | JS810875 | UNDERGROUND CONDUIT, COILABLE NONMETALLIC CONDUIT, 2" DIA. | FOOT | 1,865 | | |
| ** | JS810879 | UNDERGROUND CONDUIT, COILABLE NONMETALLIC CONDUIT, 4" DIA. | FOOT | 174 | | |
| ** | JS811032 | CONDUIT ATTACHED TO STRUCTURE, 1" DIA., PVC COATED GALVANIZED STEEL | FOOT | 393 | | |
| ** | JS812023 | CONDUIT EMBEDDED IN STRUCTURE, 2" DIA., PVC | FOOT | 45 | | |
| ** | JS812025 | CONDUIT EMBEDDED IN STRUCTURE, 3" DIA., PVC | FOOT | 738 | | |
| ** | JS813001 | JUNCTION BOX, STAINLESS STEEL, EMBEDDED IN STRUCTURE, 20" X 12" X 8" | EACH | 1 | | |
| ** | JS813022 | JUNCTION BOX, STAINLESS STEEL, ATTACHED TO STRUCTURE, 6" X 6" X 4" | EACH | 5 | | |
| ** | JS813053 | JUNCTION BOX, STAINLESS STEEL, ATTACHED TO STRUCTURE, 12" X 10" X 6" | EACH | 1 | | |
| * | JS813083 | JUNCTION BOX, STAINLESS STEEL, ATTACHED TO STRUCTURE, 18" X 18" X 8" | EACH | 2 | | |
| ** | JS814002 | HEAVY-DUTY HANDHOLE, TOLLWAY | EACH | 2 | | |
| ** | JS817211 | ELECTRIC CABLE IN CONDUIT, 600V (XLP-TYPE USE) 1/C NO. 10 | FOOT | 2,206 | | |
| ** | JS817212 | ELECTRIC CABLE IN CONDUIT, 600V (XLP-TYPE USE) 1/C NO. 8 | FOOT | 2,309 | | |

THE ILLINOIS STATE TOLL HIGHWAY AUTHORITY (TOLLWAY)

CONTRACT NO. I-18-4428

BRIDGE RECONSTRUCTION (BN 261) BURLINGTON NORTHERN SANTA FE (BNSF) RAILWAY OVER

THE TRI-STATE TOLLWAY (I-294)

MILE POST 26.6

SCHEDULE OF PRICES

| SP | PAY ITEM NUMBER | DESIGNATION | UNIT | QUANTITY | UNIT PRICE DOLLAR | AMOUNT DOLLAR |
|---|---|---|---|---|---|---|
| ** | JS817213 | ELECTRIC CABLE IN CONDUIT, 600V (XLP-TYPE USE) 1/C NO. 6 | FOOT | 212 | | |
| ** | JS817215 | ELECTRIC CABLE IN CONDUIT, 600V (XLP-TYPE USE) 1/C NO. 2 | FOOT | 8,804 | | |
| ** | JS821002 | UNDERPASS LUMINAIRE, 150 WATT, HIGH PRESSURE SODIUM VAPOR | EACH | 4 | | |
| ** | JS821003 | TEMPORARY LUMINAIRE, SODIUM VAPOR, HORIZONTAL MOUNT, 400 WATT | EACH | 8 | | |
| ** | JS821110 | UNDERPASS LUMINAIRE, LED | EACH | 4 | | |
| ** | JS830027 | TEMPORARY WOOD POLE, 50 FT., CLASS 4 | EACH | 4 | | |
| ** | JS830030 | TEMPORARY WOOD POLE, 60 FT., CLASS 4 | EACH | 3 | | |
| ** | JS830033 | TEMPORARY WOOD POLE, 70 FT., CLASS 3 | EACH | 1 | | |
| ** | JS830034 | TEMPORARY WOOD POLE, 70 FT., CLASS 3, 15 FT. MAST ARM | EACH | 8 | | |
| * | JS830145 | WOOD POLE, 45 FEET, CLASS 2 | EACH | 5 | | |
| ** | JS836007 | LIGHT POLE FOUNDATION (ROADWAY) MEDIAN, TYPE 3 | EACH | 4 | | |
| ** | JS842100 | REMOVAL OF UNDERPASS LUMINAIRE | EACH | 4 | | |
| ** | JS842105 | POLE FOUNDATION, REMOVED | EACH | 4 | | |
| ** | JS846001 | MAINTAIN LIGHTING SYSTEM | L SUM | 1 | | |
| * | JT130707 | STANDBY GENERATOR AND AUTOMATIC TRANSFER SWITCH | L SUM | 1 | | |
| * | JT130708 | TEMPORARY PORTABLE GENERATOR | L SUM | 1 | | |
| * | JT130709 | WELL HOUSE ELECTRICAL WORK | L SUM | 1 | | |
| * | JT131005 | BUILDING INSPECTIONS | L SUM | 1 | | |
| * | JT132810 | ITS POLE MOUNTED ENCLOSURE (CCTV OR MVDS) | EACH | 1 | | |
| * | JT132814 | ITS DISCONNECT SWITCH ASSEMBLY | EACH | 1 | | |

## THE ILLINOIS STATE TOLL HIGHWAY AUTHORITY (TOLLWAY)

CONTRACT NO. I-18-4428

BRIDGE RECONSTRUCTION (BN 261) BURLINGTON NORTHERN SANTA FE (BNSF) RAILWAY OVER

THE TRI-STATE TOLLWAY (I-294)

MILE POST 26.6

SCHEDULE OF PRICES

| SP | PAY ITEM NUMBER | DESIGNATION | UNIT | QUANTITY | UNIT PRICE DOLLAR | AMOUNT DOLLAR |
|---|---|---|---|---|---|---|
| * | JT132820 | CCTV CAMERA, ITS ASSEMBLY (TOLLWAY) | EACH | 1 | | |
| * | JT132830 | FIBER OPTIC COMMUNICATIONS, ITS ASSEMBLY | EACH | 1 | | |
| * | JT134000 | MAINTAIN INTELLIGENT TRANSPORTATION SYSTEMS | L SUM | 1 | | |
| * | JT134037 | ITS ELEMENT SITE GROUNDING – POLE MOUNTED ASSEMBLY | EACH | 1 | | |
| * | JT135042 | WEBCAM | EACH | 1 | | |
| * | JT160132 | HANDHOLE FOR SINGLE MODE FIBER OPTIC CABLE, 48"X72"X36" | EACH | 13 | | |
| * | JT211A11 | SUBGRADE AGGREGATE 12 IN. | CU YD | 1,546 | | |
| * | JT280500 | SEDIMENT FILTER BAG | EACH | 30 | | |
| * | JT280510 | FLOC LOG | EACH | 100 | | |
| * | JT280530 | IN-LINE FLOCCULATION SYSTEM | EACH | 3 | | |
| * | JT285055 | ARTICULATED CONCRETE BLOCK REVETMENT SYSTEM, TYPE 1 | SQ YD | 503 | | |
| * | JT311060 | AGGREGATE SUBBALLAST (SPECIAL) | CU YD | 11,033 | | |
| * | JT546000 | TELEVISION INSPECTION OF SEWER | FOOT | 4,380 | | |
| * | JT599040 | REMOVAL OF EXISTING NOISE ABATEMENT WALL | SQ FT | 6,805 | | |
| * | JT599P01 | PERFORMANCE BASED NOISE ABATEMENT WALL (PRECAST CONCRETE) NO. 1 | L SUM | 1 | | |
| * | JT637023 | CONCRETE MEDIAN BARRIER TRANSITION, TYPE V-F | FOOT | 118 | | |
| * | JT701030 | SUPPLEMENTAL BARRICADE | EACH/DAY | 1,000 | | |
| * | JT701031 | SUPPLEMENTAL SIGNING | SQ FT | 200 | | |
| * | JT701032 | SUPPLEMENTAL FLASHING ARROW BOARD (PER DAY) | EACH/DAY | 30 | | |
| * | JT701033 | SUPPLEMENTAL FLASHING ARROW BOARD (PER WEEK) | EACH/WEEK | 4 | | |

## THE ILLINOIS STATE TOLL HIGHWAY AUTHORITY (TOLLWAY)

CONTRACT NO. I-18-4428

BRIDGE RECONSTRUCTION (BN 261) BURLINGTON NORTHERN SANTA FE (BNSF) RAILWAY OVER

THE TRI-STATE TOLLWAY (I-294)

MILE POST 26.6

SCHEDULE OF PRICES

| SP | PAY ITEM NUMBER | DESIGNATION | UNIT | QUANTITY | UNIT PRICE DOLLAR | AMOUNT DOLLAR |
|---|---|---|---|---|---|---|
| * | JT701034 | SUPPLEMENTAL FLASHING ARROW BOARD (PER MONTH) | EACH/ MONTH | 4 | | |
| * | JT701035 | SUPPLEMENTAL MAINTENANCE OF TRAFFIC | DAY | 30 | | |
| * | JT703104 | LATE SEASON TEMPORARY PAVEMENT MARKING, 4" | FOOT | 243,352 | | |
| * | JT726040 | REMOVE AND REINSTALL MILE POST MARKER | EACH | 2 | | |
| * | JT783005 | WATERBLAST PAVEMENT MARKING REMOVAL WITH VACUUM RECOVERY | SQ FT | 90,051 | | |
| * | JT783009 | RAISED PAVEMENT LANE MARKER, REFLECTOR REMOVAL | EACH | 378 | | |
| * | JT810873 | UNDERGROUND CONDUIT, COILABLE NONMETALLIC CONDUIT, SDR 11, 1 1/4" DIA. | FOOT | 272 | | |
| * | JT810874 | UNDERGROUND CONDUIT, COILABLE NONMETALLIC CONDUIT, SDR 11, 1 1/2" DIA. | FOOT | 2,575 | | |
| * | JT810881 | UNDERGROUND CONDUIT, COILABLE NONMETALLIC CONDUIT, SDR 11, 6" DIA. | FOOT | 1,782 | | |
| ** | JT830042 | WOOD POLE, 90 FT., CLASS 2 | EACH | 4 | | |
| * | JT836029 | ITS CONCRETE SERVICE PAD, TYPE C | EACH | 1 | | |
| * | JT844010 | REMOVE AND REINSTALL LIGHTING UNIT | EACH | 4 | | |
| * | JT900442 | CURED-IN-PLACE PIPE LINER, 42" | FOOT | 667 | | |
| * | JT901056 | LOCATOR TRACER WIRE | FOOT | 5,169 | | |
| * | JT901135 | DEWATERING, SPECIAL | L SUM | 1 | | |
| | | | | | TOTAL AMOUNT OF CORE WORK: | |
| | | | | | | |
| * | JT155001 | CONTRACTOR'S QUALITY PROGRAM | L SUM | 1 | $1,110,000 | $1,110,000.00 |
| | | | | | | |

## THE ILLINOIS STATE TOLL HIGHWAY AUTHORITY (TOLLWAY)

### CONTRACT NO. I-18-4428

### BRIDGE RECONSTRUCTION (BN 261) BURLINGTON NORTHERN SANTA FE (BNSF) RAILWAY OVER

### THE TRI-STATE TOLLWAY (I-294)

### MILE POST 26.6

### SCHEDULE OF PRICES

| SP | PAY ITEM NUMBER | DESIGNATION | UNIT | QUANTITY | UNIT PRICE DOLLAR | AMOUNT DOLLAR |
|---|---|---|---|---|---|---|
| * | JT150100 | CONTRACT SPECIFIED EXTRA WORK ITEMS | UNIT | 100,000 | $ 1.00 | $ 100,000.00 |
| * | JT151500 | CONTRACT ADJUSTMENT ALLOWANCE FOR TEMPERATURE CONTROL OF CONCRETE | UNIT | 75,000 | $ 1.00 | $ 75,000.00 |
| * | JT154005 | EMERGENCY PAVEMENT AND SHOULDER REPAIRS | UNIT | 25,000 | $ 1.00 | $ 25,000.00 |
| * | JT154016 | ALLOWANCE FOR UNFORESEEN EROSION CONTROL MEASURES | UNIT | 20,000 | $ 1.00 | $ 20,000.00 |
| * | JT154045 | CONTRACT ALLOWANCE FOR COLD WEATHER PAVEMENT MARKINGS | UNIT | 50,000 | $ 1.00 | $ 50,000.00 |
| * | JT154051 | CONTRACT ALLOWANCE FOR UNSUITABLE SOIL | UNIT | 6,000,000 | $ 1.00 | $ 6,000,000.00 |
| * | JT154067 | CONTRACT ALLOWANCE FOR CONSTRUCTIONWORKS APPRENTICES | UNIT | 100,000 | $ 1.00 | $ 100,000.00 |
| * | JT154100 | ALLOWANCE FOR SUPPLEMENTAL FLAGGING | UNIT | 300,000 | $ 1.00 | $ 300,000.00 |
| * | JT154103 | ALLOWANCE FOR RAILROAD FLAGGING AND SERVICES | UNIT | 13,000,000 | $ 1.00 | $ 13,000,000.00 |
| * | JT154150 | ALLOWANCE FOR STEEL COSTS ADJUSTMENT | UNIT | 75,000 | $ 1.00 | $ 75,000.00 |
| * | JT154160 | ALLOWANCE FOR FUEL COSTS ADJUSTMENT | UNIT | 50,000 | $ 1.00 | $ 50,000.00 |
| | | | | | | |
| | 999NEG20 | DAMAGE TO ILLINOIS TOLLWAY'S OPERATIONAL FACILITIES PER S.P. 115.5 - TRI-STATE | HOUR | | (10,000) | |
| | 999NEG30 | DAMAGE TO ILLINOIS TOLLWAY'S OPERATIONAL FACILITIES PER S.P. 115.5 - ALL ROADWAYS OFF-PEAK | HOUR | | (2,000) | |
| | 999NEG31 | DAMAGE TO ELECTRICAL FACILITIES PER TOLLWAY SUPPL. SPEC. 107.30 (b) | INC/DAY | | (1,000) | |

## THE ILLINOIS STATE TOLL HIGHWAY AUTHORITY (TOLLWAY)

CONTRACT NO. I-18-4428

BRIDGE RECONSTRUCTION (BN 261) BURLINGTON NORTHERN SANTA FE (BNSF) RAILWAY OVER

THE TRI-STATE TOLLWAY (I-294)

MILE POST 26.6

SCHEDULE OF PRICES

| SP | PAY ITEM NUMBER | DESIGNATION | UNIT | QUANTITY | UNIT PRICE DOLLAR | AMOUNT DOLLAR |
|---|---|---|---|---|---|---|
| | 999NEG32 | LIQUIDATED DAMAGES FOR DELAY IN SUBMITTAL OF PROGRESS SCHEDULE PER TOLLWAY SUPPL. SPEC. 108.02 (e) | DAY | | (300) | |
| | 999NEG33 | NON-COMPLIANCE WITH EROSION AND SEDIMENT CONTROL PER TOLLWAY SUPPL. SPEC. 280.02 (b) (1) | INC/DAY | | See Note 2 | |
| | 999NEG34 | NON-COMPLIANCE WITH RESPONSIBILITY FOR CONSTRUCTION HAULING EQUIPMENT PER TOLLWAY SUPPL. SPEC. 105.15 | DAY | | (1,000) | |
| | 999NEG35 | FAILURE TO RESPOND TO REGULATORY AGENCY REQUESTS, PER TOLLWAY SUPPL. SPEC. 280.02 (b) (2) | OCCUR | | (25,000) | |
| | 999NEG37 | NON-COMPLIANCE WITH TOLLWAY MAINTENANCE OF TRAFFIC PER TOLLWAY SUPPL. SPEC. 701.01 (b) (1) | INC/DAY | | (2,500) | |
| | 999NEG38 | FAILURE TO RESPOND TO RE-ESTABLISH DEVICES PER TOLLWAY SUPPL. SPEC. 701.01 (b) (2) | OCCUR | | (2,500) | |
| | 999NEG39 | FAILURE TO REPAIR IMPACT ATTENUATORS, TEMPORARY PER TOLLWAY SUPPL. SPEC. 701.01 (b) (3) | OCCUR | | (2,500) | |
| | 999NEG40 | LOSS OR DAMAGE TO TOLLWAY OWNED DEVICES PER TOLLWAY SUPPL. SPEC. 701.01 (b) (4) | SQ. FT. | | (100) | |
| | 999NEG42 | NON-COMPLIANCE WITH MAINTAIN LIGHTING SYSTEM PER TOLLWAY SUPPL. SPEC. 846.06 (a) | INC/DAY | | (1,000) | |
| | 999NEG43 | FAILURE TO RESPOND TO MAINTAIN LIGHTING SYSTEM PER TOLLWAY SUPPL. SPEC. 846.06 (b) | OCCUR | | (1,000) | |
| | 999NEG44 | LIQUIDATED DAMAGES FOR NON-COMPLETION PER S.P. 105.1.1 | CAL DAY | | (12,000) | |
| | 999NEG45 | LIQUIDATED DAMAGES FOR NON-COMPLETION PER S.P. 105.1.2 | CAL DAY | | (42,000) | |
| | 999NEG46 | LIQUIDATED DAMAGES FOR NON-COMPLETION PER S.P. 105.1.3 | CAL DAY | | (12,000) | |
| | 999NEG47 | LIQUIDATED DAMAGES FOR NON-COMPLETION PER S.P. 105.1.4 | CAL DAY | | (62,000) | |
| | 999NEG48 | LIQUIDATED DAMAGES FOR NON-COMPLETION PER S.P. 105.1.5 | CAL DAY | | (62,000) | |

THE ILLINOIS STATE TOLL HIGHWAY AUTHORITY (TOLLWAY)

CONTRACT NO. I-18-4428

BRIDGE RECONSTRUCTION (BN 261) BURLINGTON NORTHERN SANTA FE (BNSF) RAILWAY OVER

THE TRI-STATE TOLLWAY (I-294)

MILE POST 26.6

SCHEDULE OF PRICES

| SP | PAY ITEM NUMBER | DESIGNATION | UNIT | QUANTITY | UNIT PRICE DOLLAR | AMOUNT DOLLAR |
|---|---|---|---|---|---|---|
| | 999NEG49 | DAMAGE TO FIBER OPTIC UTILITIES PER S.P. 115.3 | OCCUR | | (10,000) | |
| | 999NEG52 | FAILURE TO RESPOND FOR PATCHING BARRICADES PER PORTLAND CEMENT CONCRETE PATCHING SPECIAL PROVISION | OCCUR | | (500) | |
| | 999NEG53 | NON-COMPLIANCE WITH CONTRACTOR QUALITY PROGRAM SPECIAL PROVISION | OCCUR | | (1,000) | |
| | 999NEG54 | DAMAGE TO TOLLWAY MULTI-MODE CABLE, DMS SIGNS, CAMERAS, TELECOMMUNICATION, CABLE, ELECTRICAL, WATER AND SEWER PER S.P. 115.4 | OCCUR | | (1,000) | |
| | 999NEG90 | ONE LANE OR RAMP BLOCKED PER S.P. FAILURE TO OPEN LANES TO TRAFFIC | 15 MINUTES | | (3,000) | |
| | | ADJUSTMENTS | | | | |
| | 999ADJ20 | PROTECTION METHOD I FOR CONCRETE IN SUBSTRUCTURES, CULVERTS, PUMP HOUSES, AND RETAINING WALLS AS PER IDOT Article 503.22 | CU YD | | See Note 1 | |
| | 999ADJ21 | PROTECTION METHOD II FOR CONCRETE IN SUBSTRUCTURES, CULVERTS, PUMP HOUSES, AND RETAINING WALLS AS PER IDOT Article 503.22 | CU YD | | See Note 1 | |
| | 999ADJ24 | PROTECTION METHODS I, II or III FOR CONCRETE IN FOOTINGS AS PER IDOT Article 503.22 | CU YD | | See Note 1 | |
| | 999ADJ25 | PROTECTION METHODS I FOR CONCRETE IN SLOPE WALLS AS PER IDOT Article 503.22 | SQ YD | | See Note 1 | |

## THE ILLINOIS STATE TOLL HIGHWAY AUTHORITY (TOLLWAY)

CONTRACT NO. I-18-4428

BRIDGE RECONSTRUCTION (BN 261) BURLINGTON NORTHERN SANTA FE (BNSF) RAILWAY OVER

THE TRI-STATE TOLLWAY (I-294)

MILE POST 26.6

SCHEDULE OF PRICES

| SP | PAY ITEM NUMBER | DESIGNATION | UNIT | QUANTITY | UNIT PRICE DOLLAR | AMOUNT DOLLAR |
|---|---|---|---|---|---|---|
| | 999ADJ45 | CONSTRUCTIONWORKS APPRENTICES WAGE RATE | HOUR | | 15.00 | |
| | | TOTAL AMOUNT OF CONTRACTOR'S QUALITY PROGRAM (CQP) + CONTINGENCY WORK | | | | 20,905,000 |

| | |
|---|---|
| TOTAL AMOUNT OF CORE WORK + AMOUNT OF CONTRACTOR'S QUALITY PROGRAM + TOTAL AMOUNT OF CONTINGENCY WORK = TOTAL AMOUNT OF BASE BID | |
| BID CREDIT | |
| AWARD CRITERIA | |

LEGEND FOR SP COLUMN

| | |
|---|---|
| * | INDICATES SPECIAL PROVISION |
| ** | INDICATES TOLLWAY SUPPLEMENTAL SPECIFICATIONS |
| *** | INDICATES IDOT RECURRING SPECIAL PROVISION |
| BDE | INDICATES IDOT BDE SPECIAL PROVISION |
| GBSP | INDICATES IDOT GUIDE BRIDGE SPECIAL PROVISION |

Note 1: The Contractor should leave the unit price value blank. The unit price will be entered by the Tollway after receipt of bids.

Note 2: The Contractor should leave the unit price value blank. The deduction base value is $1,000.00 and will be adjusted by a Gravity Adjustment Factor according to Article 280.02(b)(1) Table A of the Supplemental Specifications, assessed for each infraction.

ILLINOIS STATE TOLL HIGHWAY AUTHORITY (Illinois Tollway)
SPECIAL PROVISIONS
CONTRACT NUMBER I-18-4428
Bridge Reconstruction Carrying the
Burlington Northern Santa Fe Railway (BNSF)
Over the Tri-State Tollway (I-294)
Mile Post 26.6

TABLE OF CONTENTS

VOLUME II


S.P. 101 LOCATION AND SCOPE OF WORK ..... J-1R

S.P. 102 CONTRACT I-18-4428 INDEX OF DRAWINGS ..... J-2

S.P. 103 CONTRACT COMPLETION DATE, SUBSTANTIAL AND INTERIM COMPLETION DATES ..... J-11

S.P. 104 NOTICE TO PROCEED/COMMENCEMENT OF ON-SITE WORK ..... J-12R

S.P. 105 LIQUIDATED DAMAGES FOR DELAY(S) AND INCENTIVE PLAN(S) ..... J-12R

S.P. 106 COOPERATION WITH UTILITIES AND OTHERS ..... J-13

S.P. 107 INSURANCE ..... J-44

S.P. 108 INDEMNIFICATION ..... J-45

S.P. 109 WORKING HOURS AND PROSECUTION OF THE WORK ..... J-46

S.P. 110 LIST OF INCIDENTALS TO THE PAY ITEMS ..... J-51

S.P. 111 EROSION AND SEDIMENT CONTROL ..... J-53

S.P. 112 QUALIFIED PRODUCTS ..... J-89

S.P. 113 RESERVED ..... J-90

S.P. 114 DELIVERY OF SALVAGEABLE MATERIAL TO THE ILLINOIS TOLLWAY .. J-90

S.P. 115 ILLINOIS TOLLWAY OPERATIONAL FACILITIES ..... J-91

S.P. 116 APPROVING A PART OR PORTION OF THE WORK FOR BENEFICIAL USE ..... J-94

S.P. 117 RESERVED ..... J-94

S.P. 118 RIGHT-OF-WAY ..... J-95RR

S.P. 119 AVAILABLE GEOTECHNICAL INFORMATION ..... J-95

S.P. 120 AVAILABLE RECORD DRAWINGS ..... J-96

S.P. 121 ELECTRONIC DATA FILES AVAILABLE ..... J-96R

WARRANTY (ILLINOIS TOLLWAY) ..... J-98

TREE REMOVAL (ILLINOIS TOLLWAY) ..... J-101

EARTH AND ROCK EXCAVATION (ILLINOIS TOLLWAY) ..... J-102R

EMBANKMENT ..... J-105A

DEMOLITION OF STRUCTURES (ILLINOIS TOLLWAY GBSP) ..... J-106

COFFERDAM (TYPE 1) ..... J-111

ERECTION OF GIRDERS (ILLINOIS TOLLWAY GBSP) ..... J-113

PILE DRIVING ANALYZER TESTING ..... J-117A

WAVE EQUATION ANALYSIS OF PILES ..... J-117D

CONCRETE WINGWALL REMOVAL ..... J-118

REVETMENT MAT REMOVAL ..... J-119

PROPOSED STORM SEWER CONNECTION TO EXISTING STORM SEWER ..... J-120

PROPOSED STORM SEWER CONNECTION TO EXISTING MANHOLE ..... J-121

RETAINING WALL REMOVAL ..... J-122

ALLOWANCE FOR UNSUITABLE SOIL ..... J-369R

CONTRACT ALLOWANCE FOR CONSTRUCTION WORKS APPRENTICES (ILLINOIS TOLLWAY) ..... J-370

ALLOWANCE FOR SUPPLEMENTAL FLAGGING ..... J-372

ALLOWANCE FOR RAILROAD FLAGGING AND SERVICES ..... J-373R

ALLOWANCE FOR STEEL COSTS ADJUSTMENT (ILLINOIS TOLLWAY) ..... J-374

STEEL COST ADJUSTMENT (ILLINOIS TOLLWAY)(RETURN FORM WITH BID) ..... J-375

ALLOWANCE FOR FUEL COSTS ADJUSTMENT (ILLINOIS TOLLWAY) ..... J-379

FUEL COST ADJUSTMENT (ILLINOIS TOLLWAY) (RETURN FORM WITH BID) ..... J-380

CONTRACTOR'S QUALITY PROGRAM (ILLINOIS TOLLWAY) ..... J-384

HANDHOLE FOR SINGLE MODE FIBER OPTIC CABLE ..... J-385

SUBGRADE AGGREGATE (ILLINOIS TOLLWAY) ..... J-386

SEDIMENT FILTER BAG ..... J-389

FLOC LOG ..... J-390

IN-LINE FLOCCULATION SYSTEM ..... J-392

ARTICULATED CONCRETE BLOCK REVETMENT SYSTEM (ILLINOIS TOLLWAY) . J-394

AGGREGATE SUBBALLAST (SPECIAL) ..... J-399

TELEVISION INSPECTION OF SEWER (ILLINOIS TOLLWAY) ..... J-402

REMOVAL OF EXISTING NOISE ABATEMENT WALL ..... J-404

PERFORMANCE BASED NOISE ABATEMENT WALL (PRECAST CONCRETE)(CTS) ..... J-406

FORM LINER SIMULATED LIMESTONE SURFACE AND FORM LINER MOCKUP (CTS) ..... J-427

the plans such that the BNSF Railway can mobilize track laying equipment ("grade ready") and construct the railroad tracks on the permanent track alignment on or before 11:59 p.m. on **August 9, 2021**.

## S.P. 104 NOTICE TO PROCEED/COMMENCEMENT OF ON-SITE WORK

### S.P. 104.1 COMMENCEMENT OF WORK

In accordance with Article 103.08 of the Illinois Tollway Supplemental Specifications, it is anticipated the Notice to Proceed will be issued after the Contract is approved by all parties; including a work commencement date no earlier than **August 9, 2019**. The Illinois Tollway will not issue the Notice to Proceed until all required contract documents, including bond and insurance requirements, are submitted by the Contractor and approved by the Illinois Tollway. A Time Extension Request will not be considered should the issuance of Notice to Proceed to the Contract be delayed due to the failure of the Contractor to submit contract documents which comply with the specified requirements. There shall be no damages or additional compensation due the Contractor for delays, if any, in issuing the Notice to Proceed.

## S.P. 105 LIQUIDATED DAMAGES FOR DELAY(S) AND INCENTIVE PLAN(S)

### S.P. 105.1 Liquidated Damages

#### S.P. 105.1.1 Liquidated Damages for Non-Completion Per S.P. 103.1

In accordance with the provisions of Article 108.09 of the Illinois Tollway Supplemental Specifications, the Contractor shall pay to the Illinois Tollway the sum of **$12,000.00** per day, as liquidated damages for each and every calendar day beyond the Completion Date stipulated in S.P. 103.1 that the work, or any part thereof, remains incomplete.

#### S.P. 105.1.2 Liquidated Damages for Non-Completion Per S.P. 103.2

In accordance with the provisions of Article 108.09 of the Illinois Tollway Supplemental Specifications, the Contractor shall pay to the Illinois Tollway the sum of **$42,000.00** per day, as liquidated damages for each and every calendar day beyond the Substantial Completion Date stipulated in S.P. 103.2 that the work, or any part thereof, remains incomplete.

#### S.P. 105.1.3 Liquidated Damages for Non-Completion Per S.P. 103.3

In accordance with the provisions of Article 108.09 of the Illinois Tollway Supplemental Specifications, the Contractor shall pay to the Illinois Tollway the sum of **$12,000.00** per day, as liquidated damages for each and every calendar day beyond the Interim Completion Date stipulated in S.P. 103.3 that the work, or any part thereof, remains incomplete.

## S.P. 118 RIGHT-OF-WAY

Proposed right-of-way and easements for the performance of the Work may not be available when Notice to Proceed is issued. The Contractor shall verify the status of right-of-way parcels to be acquired prior to the preparation of the Baseline Schedule. The Baseline Schedule should reflect construction sequencing necessary to work only within acquired right-of-way parcels, and the Contractor shall take all appropriate measures to ensure that construction operations do not encroach on parcels not acquired. The Contractor shall be required to adjust the work schedule as needed to coincide with parcel acquisition from time to time to work only within available right-of-way, and shall prepare revised Baseline Schedule(s) in compliance therewith as directed by the Engineer.

The final configuration of the Project Right-of-Way requires the acquisitions of several land parcels. This listing identifies these individual parcels and provides the acquisition status. The Contractor's bid proposal shall have been submitted with the understanding that access to the proposed right-of-way and easements will be provided no earlier that the date indicated in the "Projected Acquisition Date" column in the table below.

| Parcel ID # | Projected Acquisition Date | Actual Acquisition Date |
|---|---|---|
| TW-5-16-067* | August 9, 2019 | |
| TW-5-16-068 | August 9, 2019 | |
| TW-5-16-070 | August 9, 2019 | |
| TW-5-16-134** | October 1, 2019 | |

* Contractor will not have access to the temporary easement located within the tennis courts and cannot disrupt tennis court operations until September 3, 2019. Other work within the parcel will be allowed as approved by the Engineer. Modifications to the temporary fence location may be required to work in this parcel prior to September 3, 2019.

**Access to the temporary easement is contingent upon the BNSF Railroad approval of the Contractor's Temporary Occupancy Permit.

However, the Illinois Tollway reserves the right not to issue the Notice to Proceed until sufficient right-of-way, as deemed by the Engineer, is available for commencement of the Work. In any event, there shall be no damages or additional compensation due to the Contractor for delays due to delay in furnishing the right-of-way, and the Contractor's sole remedy, where applicable, shall be an extension of time.

## S.P. 119 AVAILABLE GEOTECHNICAL INFORMATION

The following is a listing of the geotechnical reports prepared by Wang Engineering, Inc., that are available for review at the office of the Illinois Tollway On-line Plan Room.

## ALLOWANCE FOR RAILROAD FLAGGING AND SERVICES

**Description.** This Special Provision establishes a budgetary allowance for flagging and services required and provided by the railroad as a result of work being performed by the Contractor on the Illinois Tollway system. This work shall be performed in accordance with Section 107.12 of the Illinois Tollway Supplemental Specifications, except the Railroad will bill the Contractor directly for this work. Railroad Services includes all labor, equipment, and materials provided by BNSF, or their agents, to participate in execution of the Project. Railroad services includes BNSF performance and participation in services such as track/ballast construction, track/ballast removal, installation and removal of temporary crossings, track relocations, BNSF Project Engineer, and BNSF Inspector Coordinator.

**General Requirements.** The Contractor shall pay all costs of Railroad Flagging services required and provided by the Railroad for all work performed under the contract. These costs shall be considered separate from the contract unit prices bid for the various items of work involved. Upon written order of the Engineer, the Contractor shall pay the costs of providing flaggers as specified with the exception of flaggers required for transporting material or equipment across the tracks. The Contractor will be reimbursed for the actual amounts paid.

Adequate notification shall be made to the Railroad to schedule the Flagger. The Contractor shall make every effort to notify the Railroad in advance if previously requested flagger(s) will not be needed for any reason.

The Railroad may have specific work rules that govern their use of flaggers. The Contractor shall coordinate with the appropriate Railroad contact to obtain information about specific Railroad work rules and how they may impact the cost of flagging services.

During the construction of the Project, BNSF will send the Contractor progressive invoices detailing the costs of the railroad work performed by BNSF under the Agreement with the Tollway. Contractor must coordinate with the Engineer for approval of BNSF invoiced amounts, and reimburse BNSF for completed force-account work within ninety (90) days of the date of the invoice for such work. Upon written order of the Engineer, the Contractor shall pay the costs invoiced by BNSF. The Contractor will be reimbursed for the actual amounts paid to BNSF for work completed by BNSF.

BNSF will assess a finance charge of .033% per day (12% per annum) on any unpaid sums or other charges due which are past its credit terms. The finance charge continues to accrue daily until the date payment is received by BNSF, not the date payment is made or the date postmarked on the payment. Finance charges will be assessed on delinquent sums and other charges as of the end of the month and will be reduced by amounts in dispute and any unposted payments received by the month's end. Finance charges will be noted on invoices sent to Contractor. The Contractor will not be reimbursed for finance charges incurred as a result of past due charges.

**Method of Measurement.** This work will not be measured for payment.

**Basis of Payment.** Payment for this work will be made as specified in Illinois Tollway Supplemental Specifications Article 109.05. Railroad flagging and services bills shall be submitted to the Engineer on a monthly basis. Payment for this work shall not exceed the costs incurred by the Contractor and approved by the Engineer. Any administrative costs shall be based on the cumulative total costs of said bills.

Any costs incurred for flagging protection provided by the Railroad at the Contractor's request for those days when the Contractor does not work shall be borne by the Contractor.

| Pay Item Number | Designation | Unit of Measure |
|---|---|---|
| JT154103 | ALLOWANCE FOR RAILROAD FLAGGING AND SERVICES | UNIT |

**ADDENDUM NO. 4**
**TO**
**CONTRACT REQUIREMENTS**
**FOR CONTRACT I-18-4428**
**ILLINOIS STATE TOLL HIGHWAY AUTHORITY**

**Date: June 4, 2019**

For which proposals will be received by the Illinois State Toll Highway Authority at its offices, 2700 Ogden Avenue, Downers Grove, Illinois 60515 until 10:30:00 A.M. local time, **June 13, 2019.**

## NOTICE OF REVISION TO CONTRACT

**NOTES:**

1. The Bid opening date has been revised. Sealed proposals for the above numbered Contract will be received by the Illinois State Toll Highway Authority at its offices, 2700 Ogden Avenue, Downers Grove, 60515 until 10:30 A.M., local time, June 13, 2019, at which the Proposals will be opened and the bids read allowed. Replace A-1 with the attached page A-1R. Replace P-1 with attached page P-1R.

2. Revised Schedule of Price pages P-12RR, accompany this Addendum and must be inserted into the Contract Proposal by the Bidder. Note, all P-Pages have been included as part of this Addendum.

3. Plan-Holder's Requests for Information received by 2:00pm (CDT), May 24, 2019 and not included in Addendum No. 1, Addendum No. 2, or Addendum No. 3 are attached for information.

## CHANGES TO THE CONTRACT REQUIREMENTS

## CHANGES TO THE SCHEDULE OF PRICES

**Change No. 1**
Contract Requirements, Volume I, Replace Pages P-1 and P-12R with pages P-1R and P-12RR (attached)

This change contains the following revision:

1.1 On P-1R, The Bid opening date was revised to June 13, 2019.

1.2. On P-12RR, Remove pay item 66900200 NON-SPECIAL WASTE DISPOSAL.

1.3. On P-12RR, Remove pay item 66900205 SPECIAL WASTE DISPOSAL.

---

**END OF ADDENDUM CHANGES**

**THE ILLINOIS STATE TOLL HIGHWAY AUTHORITY**

**ADVERTISEMENT FOR SEALED BIDS**

**Bid Schedule and information for**

**CONTRACT NO: I-18-4428**

Sealed Bids for the above numbered Contract as described below will be received by the Illinois Tollway at its offices, at 2700 Ogden Avenue, Downers Grove, Illinois 60515, until 10:30:00 a.m., local time, June 13, 2019, at which time the Bids will be opened and the bids read aloud.

An **optional pre-bid meeting** is scheduled for May 16, 2019 at the Central Administration Building in Downers Grove, at 2700 Ogden Avenue. The meeting will be held in Conference Room 175 at 10:00 AM.

The work to be done under this Contract shall be started on or about August 2, 2019. All work under this Contract shall be completed by July 29, 2022.

The work under this Contract shall consist of: Replacement of structure carrying the BNSF Railroad over the Tri-State Tollway (BN 261), Temporary shoo-fly structure carrying the BNSF Railroad over the Tri-State Tollway, Shoulder reconstruction and widening, Mainline pavement patching as necessary, Drainage improvements and culvert extensions, Temporary earth embankment supporting temporary railroad tracks, Ground improvements consisting of timber piling, Permanent and Temporary retaining walls, Erosion control measures and landscaping improvements, Temporary and permanent lighting, and Maintenance of Traffic.

The work under this Contract is to be performed on: the Tri-State (I-294) Tollway at Mile Post 26.6 in Cook County, Illinois.

Bidders may be required to be pre-qualified by the Illinois Department of Transportation (IDOT).

IDOT Prequalification required: ☒YES ☐NO If 'NO', ignore any reference to IDOT Prequalification within the remainder of this document.

Joint Ventures shall be limited to no more than 3 individually IDOT-pre-qualified members.

Bidders are also required to be registered, or submit evidence of application, with the Illinois Department of Human Rights (IDHR). **There are NO EXCEPTIONS.**

Please note that written or oral communications received by the Illinois Tollway in connection with this solicitation may be required to be reported to the Procurement Policy Board as required by law. This provision is not intended to prohibit communications with State employees regarding a procurement matter, but rather only requires reporting of those communications when they occur.

All bids must be on forms prescribed by the Illinois Tollway and must comply with the terms and conditions set forth in the Contract Documents. Copies of the plans, special provisions, bid forms and other Contract Documents for this Contract are available from BHFX Digital Imaging and can be viewed and/or ordered for purchase by visiting the On-line Plan Room via www.illinoistollwaybidding.com. Copies of the current Illinois Tollway Supplemental Specifications to the Illinois Department of Transportation Standard Specifications for Road and Bridge Construction can be purchased directly from BHFX Digital Imaging. The current Illinois Tollway Supplemental Specifications may also be viewed in the 'Doing Business' section on the Tollway website. Current Illinois Department of Transportation Standard Specifications for Road and Bridge Construction, Supplemental Specifications and Recurring Special Provisions can be viewed and purchased from the Illinois Department of Transportation website. Electronic copies of the contract documents are also available on compact disk (CD) from BHFX Digital Imaging. Copies are in a portable document format (PDF). **Bidders with questions or in need of assistance in purchasing Contract Documents are to contact a** BHFX Digital Imaging, **Customer Service Representative at 630-393-0777, ask for the Plan Room.**

Questions pertaining to the intent of the Contract Documents may be sent to the Illinois Tollway, attention Mohamad Faraj @ mfaraj@getipass.com, to be received no later than 2:00 p.m. local time on May 24, 2019.

A completed Questionnaire and a statement of Current Contractual Obligations on forms supplied by the Illinois Tollway will be required from the apparent low Bidder once the apparent low Bidder is determined. Each Bid must be accompanied by a Bid Guaranty in the amount of five (5%) per cent of the total amount shown in the Bid for the Contract. The Bid Guaranty shall be in the form of an acceptable bid bond or a bank draft, certified check or cashier's check drawn on a solvent bank made payable to the Illinois State Toll Highway Authority.

Award of the above Contract, if any award be made, will be to the lowest responsive and responsible Bidder or Bidders. The Illinois Tollway reserves the right to reject any and all Bids, to waive technicalities, or cancel the solicitation.

***COPIES OF PLANS, SPECIAL PROVISIONS, BID FORMS, CONTRACT DOCUMENTS, STANDARD SPECIFICATIONS AND SUPPLEMENTAL SPECIFICATIONS ARE NOT AVAILABLE AT THE TOLLWAY CENTRAL ADMINISTRATION BUILDING.***

**DATE: June 4, 2019**

## THE ILLINOIS STATE TOLL HIGHWAY AUTHORITY

## BID

## CONTRACT NO. I-18-4428

Bids will be received by The Illinois State Toll Highway Authority at its offices, 2700 Ogden Avenue, Downers Grove, Illinois, 60515 until 10:30:00 a.m., local time, June 13th, 2019 and immediately thereafter publicly opened and read aloud.

TO THE CHAIRMAN OF THE ILLINOIS STATE TOLL HIGHWAY AUTHORITY:

The undersigned hereby proposes to perform: Replacement of structure carrying the BNSF Railroad over the Tri-State Tollway (BN 261), Temporary shoo-fly structure carrying the BNSF Railroad over the Tri-State Tollway, Shoulder reconstruction and widening, Mainline pavement patching as necessary, Drainage improvements and culvert extensions, Temporary earth embankment supporting temporary railroad tracks, Ground improvements consisting of timber piling, Permanent and Temporary retaining walls, Erosion control measures and landscaping improvements, Temporary and permanent lighting, and Maintenance of Traffic.

The services will be performed within the: Tri-State (I-294) Tollway at Mile Post 26.6 in Cook County, Illinois.

The undersigned declares that the Advertisement for Sealed Bids, Instructions to Bidders, this Bid Form, IDOT Standard Specifications, Tollway Supplemental Specifications, Special Provisions, Plans, Addenda to the foregoing (if any), form of Agreement, forms of Contract Bonds, and other exhibits (if any), on file at the office of The Illinois State Toll Highway Authority have been carefully examined, and that the undersigned has inspected in detail the site of the proposed Work, and familiarized itself with all of the conditions affecting the Contract, and that has satisfied itself as to The Work to be done and the conditions under which it must be carried out, and understands that in submitting this Bid waives all rights to plead any misunderstanding regarding the same.

The undersigned hereby tenders this Bid to construct and complete said Work in accordance with the Plans, IDOT Standard Specifications, Tollway Supplemental Specifications (if any), and the accompanying Special Provisions now on file in the office of The Illinois State Toll Highway Authority, and the following addenda issued thereto:

Addendum No. _____ Date_____

Addendum No. _____ Date_____

Addendum No. _____ Date_____

Addendum No. _____ Date _____

The undersigned further agrees to furnish all necessary transportation, machinery, equipment, tools, labor and other means of construction; and to do all the work and to furnish all of the materials specified in the Contract in the manner and at the times prescribed under the supervision and direction of the Authority or its authorized representatives, for the lump sums and unit prices quoted in the following Schedule of Prices:

## THE ILLINOIS STATE TOLL HIGHWAY AUTHORITY (TOLLWAY)

**CONTRACT NO. I-18-4428**

**BRIDGE RECONSTRUCTION (BN 261) BURLINGTON NORTHERN SANTA FE (BNSF) RAILWAY OVER**

**THE TRI-STATE TOLLWAY (I-294)**

**MILE POST 26.6**

**SCHEDULE OF PRICES**

| SP | PAY ITEM NUMBER | DESIGNATION | UNIT | QUANTITY | UNIT PRICE DOLLAR | AMOUNT DOLLAR |
|---|---|---|---|---|---|---|
| * | 20100500 | TREE REMOVAL, ACRES | ACRE | 12.0 | | |
| | 20101100 | TREE TRUNK PROTECTION | EACH | 10 | | |
| * | 20200100 | EARTH EXCAVATION | CU YD | 109,456 | | |
| * | 20201200 | REMOVAL AND DISPOSAL OF UNSUITABLE MATERIAL | CU YD | 18,360 | | |
| | 20400100 | BORROW EXCAVATION | CU YD | 45,350 | | |
| | 20400800 | FURNISHED EXCAVATION | CU YD | 75,772 | | |
| | 20600150 | TRENCH BACKFILL | CU YD | 5,210 | | |
| | 20900110 | POROUS GRANULAR BACKFILL | CU YD | 5,018 | | |
| | 25000400 | NITROGEN FERTILIZER NUTRIENT | POUND | 475 | | |
| | 25000500 | PHOSPHORUS FERTILIZER NUTRIENT | POUND | 62 | | |
| | 25000600 | POTASSIUM FERTILIZER NUTRIENT | POUND | 1,162 | | |
| | 25100127 | MULCH, METHOD 3A | ACRE | 25.3 | | |
| | 25100630 | EROSION CONTROL BLANKET | SQ YD | 72,154 | | |
| | 25200100 | SODDING | SQ YD | 16,686 | | |
| | 25200110 | SODDING, SALT TOLERANT | SQ YD | 2,192 | | |
| | 25200200 | SUPPLEMENTAL WATERING | UNIT | 349 | | |
| | 28000250 | TEMPORARY EROSION CONTROL SEEDING | POUND | 2,520 | | |

## THE ILLINOIS STATE TOLL HIGHWAY AUTHORITY (TOLLWAY)

CONTRACT NO. I-18-4428

BRIDGE RECONSTRUCTION (BN 261) BURLINGTON NORTHERN SANTA FE (BNSF) RAILWAY OVER

THE TRI-STATE TOLLWAY (I-294)

MILE POST 26.6

SCHEDULE OF PRICES

| SP | PAY ITEM NUMBER | DESIGNATION | UNIT | QUANTITY | UNIT PRICE DOLLAR | AMOUNT DOLLAR |
|---|---|---|---|---|---|---|
| | 28100107 | STONE RIPRAP, CLASS A4 | SQ YD | 40 | | |
| | 28200200 | FILTER FABRIC | SQ YD | 708 | | |
| | 31100200 | SUBBASE GRANULAR MATERIAL, TYPE A | CU YD | 27 | | |
| | 31100500 | SUBBASE GRANULAR MATERIAL, TYPE A 6" | SQ YD | 1,866 | | |
| | 31101200 | SUBBASE GRANULAR MATERIAL, TYPE B 4" | SQ YD | 980 | | |
| | 31102000 | SUBBASE GRANULAR MATERIAL, TYPE C | CU YD | 12 | | |
| | 35102400 | AGGREGATE BASE COURSE, TYPE B 12" | SQ YD | 3,110 | | |
| | 40200700 | AGGREGATE SURFACE COURSE, TYPE A 8" | SQ YD | 1,441 | | |
| | 40201000 | AGGREGATE FOR TEMPORARY ACCESS | TON | 840 | | |
| | 40600275 | BITUMINOUS MATERIALS (PRIME COAT) | POUND | 6,998 | | |
| | 40600290 | BITUMINOUS MATERIALS (TACK COAT) | POUND | 1,875 | | |
| | 40600982 | HOT-MIX ASPHALT SURFACE REMOVAL - BUTT JOINT | SQ YD | 24 | | |
| | 40603085 | HOT-MIX ASPHALT BINDER COURSE, IL-19.0, N70 | TON | 348 | | |
| | 40603340 | HOT-MIX ASPHALT SURFACE COURSE, MIX "D", N70 | TON | 641 | | |
| | 42000060 | WELDED WIRE REINFORCEMENT | SQ YD | 24 | | |
| | 42000501 | PORTLAND CEMENT CONCRETE PAVEMENT 10" (JOINTED) | SQ YD | 203 | | |
| | 42001300 | PROTECTIVE COAT | SQ YD | 1,652 | | |

## THE ILLINOIS STATE TOLL HIGHWAY AUTHORITY (TOLLWAY)

CONTRACT NO. I-18-4428

BRIDGE RECONSTRUCTION (BN 261) BURLINGTON NORTHERN SANTA FE (BNSF) RAILWAY OVER

THE TRI-STATE TOLLWAY (I-294)

MILE POST 26.6

SCHEDULE OF PRICES

| SP | PAY ITEM NUMBER | DESIGNATION | UNIT | QUANTITY | UNIT PRICE DOLLAR | AMOUNT DOLLAR |
|---|---|---|---|---|---|---|
| | 42400200 | PORTLAND CEMENT CONCRETE SIDEWALK 5 INCH | SQ FT | 8,824 | | |
| | 42400800 | DETECTABLE WARNINGS | SQ FT | 50 | | |
| | 44000100 | PAVEMENT REMOVAL | SQ YD | 4,527 | | |
| | 44000157 | HOT-MIX ASPHALT SURFACE REMOVAL, 2" | SQ YD | 11,652 | | |
| | 44000400 | GUTTER REMOVAL | FOOT | 501 | | |
| | 44000500 | COMBINATION CURB AND GUTTER REMOVAL | FOOT | 2,152 | | |
| | 44000600 | SIDEWALK REMOVAL | SQ FT | 4,950 | | |
| | 44001980 | CONCRETE BARRIER REMOVAL | FOOT | 395 | | |
| | 44004000 | PAVED DITCH REMOVAL | FOOT | 1,196 | | |
| | 44004250 | PAVED SHOULDER REMOVAL | SQ YD | 8,123 | | |
| | 44201747 | CLASS D PATCHES, TYPE IV, 8 INCH | SQ YD | 1,866 | | |
| * | 50100300 | REMOVAL OF EXISTING STRUCTURES NO. 1 | EACH | 1 | | |
| * | 50100400 | REMOVAL OF EXISTING STRUCTURES NO. 2 | EACH | 1 | | |
| | 50104400 | CONCRETE HEADWALL REMOVAL | EACH | 10 | | |
| | 50157300 | PROTECTIVE SHIELD | SQ YD | 1,980 | | |
| | 50200100 | STRUCTURE EXCAVATION | CU YD | 14,485 | | |
| * | 50201101 | COFFERDAM (TYPE 1) (LOCATION - 1) | EACH | 1 | | |

## THE ILLINOIS STATE TOLL HIGHWAY AUTHORITY (TOLLWAY)

**CONTRACT NO. I-18-4428**

**BRIDGE RECONSTRUCTION (BN 261) BURLINGTON NORTHERN SANTA FE (BNSF) RAILWAY OVER**

**THE TRI-STATE TOLLWAY (I-294)**

**MILE POST 26.6**

**SCHEDULE OF PRICES**

| SP | PAY ITEM NUMBER | DESIGNATION | UNIT | QUANTITY | UNIT PRICE DOLLAR | AMOUNT DOLLAR |
|---|---|---|---|---|---|---|
| | 50300225 | CONCRETE STRUCTURES | CU YD | 651.9 | | |
| | 50401205 | PRECAST CONCRETE CAPS | EACH | 1,929 | | |
| * | 50500105 | FURNISHING AND ERECTING STRUCTURAL STEEL | L. SUM | 1 | | |
| | 50500505 | STUD SHEAR CONNECTORS | EACH | 1,985 | | |
| | 50800105 | REINFORCEMENT BARS | POUND | 490,410 | | |
| | 50800205 | REINFORCEMENT BARS, EPOXY COATED | POUND | 328,372 | | |
| | 50800515 | BAR SPLICERS | EACH | 193 | | |
| | 50901760 | PIPE HANDRAIL | FOOT | 248 | | |
| | 51200205 | FURNISHING UNTREATED PILES 30.1-45 FEET | FOOT | 65,238 | | |
| | 51200305 | FURNISHING UNTREATED PILES OVER 45 FEET | FOOT | 689 | | |
| | 51201900 | FURNISHING STEEL PILES HP14X89 | FOOT | 6,104 | | |
| | 51202305 | DRIVING PILES | FOOT | 72,031 | | |
| | 51202900 | TEST PILE TIMBER | EACH | 12 | | |
| | 51203900 | TEST PILE STEEL HP14X89 | EACH | 5 | | |
| | 51204650 | PILE SHOES | EACH | 108 | | |
| GBSP | 51602000 | PERMANENT CASING | FOOT | 1,941 | | |
| GBSP | 51603000 | DRILLED SHAFT IN SOIL | CU YD | 1,291 | | |

## THE ILLINOIS STATE TOLL HIGHWAY AUTHORITY (TOLLWAY)

CONTRACT NO. I-18-4428

BRIDGE RECONSTRUCTION (BN 261) BURLINGTON NORTHERN SANTA FE (BNSF) RAILWAY OVER

THE TRI-STATE TOLLWAY (I-294)

MILE POST 26.6

SCHEDULE OF PRICES

| SP | PAY ITEM NUMBER | DESIGNATION | UNIT | QUANTITY | UNIT PRICE DOLLAR | AMOUNT DOLLAR |
|---|---|---|---|---|---|---|
| | 52100400 | STEEL BEARING ASSEMBLY | EACH | 16 | | |
| | 52200010 | TEMPORARY SHEET PILING | SQ FT | 4,027 | | |
| | 52200020 | TEMPORARY SOIL RETENTION SYSTEM | SQ FT | 13,726 | | |
| | 52200100 | FURNISHING SOLDIER PILES (HP SECTION) | FOOT | 951 | | |
| | 52200105 | FURNISHING SOLDIER PILES (W SECTION) | FOOT | 4,317 | | |
| | 52200200 | DRILLING AND SETTING SOLDIER PILES (IN SOIL) | CU FT | 35,675 | | |
| | 52200250 | UNTREATED TIMBER LAGGING | SQ FT | 8,547 | | |
| | 52200700 | PRECAST MODULAR RETAINING WALL | SQ FT | 20,719 | | |
| | 52200800 | SEGMENTAL CONCRETE BLOCK WALL | SQ FT | 3,912 | | |
| | 52200900 | CONCRETE STRUCTURES (RETAINING WALL) | CU YD | 602.7 | | |
| | 54001001 | BOX CULVERT END SECTIONS, CULVERT NO. 1 | EACH | 1 | | |
| | 54001003 | BOX CULVERT END SECTIONS, CULVERT NO. 3 | EACH | 1 | | |
| | 54001004 | BOX CULVERT END SECTIONS, CULVERT NO. 4 | EACH | 1 | | |
| | 54003000 | CONCRETE BOX CULVERTS | CU YD | 841.8 | | |
| | 54010605 | PRECAST CONCRETE BOX CULVERTS 6'X5' | FOOT | 562 | | |
| | 54248510 | CONCRETE COLLAR | CU YD | 6.4 | | |
| | 550A0070 | STORM SEWERS, CLASS A, TYPE 1 15" | FOOT | 152 | | |

THE ILLINOIS STATE TOLL HIGHWAY AUTHORITY (TOLLWAY)

CONTRACT NO. I-18-4428

BRIDGE RECONSTRUCTION (BN 261) BURLINGTON NORTHERN SANTA FE (BNSF) RAILWAY OVER

THE TRI-STATE TOLLWAY (I-294)

MILE POST 26.6

SCHEDULE OF PRICES

| SP | PAY ITEM NUMBER | DESIGNATION | UNIT | QUANTITY | UNIT PRICE DOLLAR | AMOUNT DOLLAR |
|---|---|---|---|---|---|---|
| | 550A0120 | STORM SEWERS, CLASS A, TYPE 1 24" | FOOT | 58 | | |
| | 550A0190 | STORM SEWERS, CLASS A, TYPE 1 48" | FOOT | 55 | | |
| | 550A0340 | STORM SEWERS, CLASS A, TYPE 2 12" | FOOT | 88 | | |
| | 550A0360 | STORM SEWERS, CLASS A, TYPE 2 15" | FOOT | 1,927 | | |
| | 550A0380 | STORM SEWERS, CLASS A, TYPE 2 18" | FOOT | 235 | | |
| | 550A0410 | STORM SEWERS, CLASS A, TYPE 2 24" | FOOT | 202 | | |
| | 550A0430 | STORM SEWERS, CLASS A, TYPE 2 30" | FOOT | 1,033 | | |
| | 550A0470 | STORM SEWERS, CLASS A, TYPE 2 42" | FOOT | 1,920 | | |
| | 550A0480 | STORM SEWERS, CLASS A, TYPE 2 48" | FOOT | 392 | | |
| | 550A5500 | STORM SEWERS, CLASS A, TYPE 2 EQUIVALENT ROUND-SIZE 42" | FOOT | 9 | | |
| | 55100200 | STORM SEWER REMOVAL 6" | FOOT | 41 | | |
| | 55100400 | STORM SEWER REMOVAL 10" | FOOT | 162 | | |
| | 55100500 | STORM SEWER REMOVAL 12" | FOOT | 97 | | |
| | 55100700 | STORM SEWER REMOVAL 15" | FOOT | 1,074 | | |
| | 55100900 | STORM SEWER REMOVAL 18" | FOOT | 44 | | |
| | 55101200 | STORM SEWER REMOVAL 24" | FOOT | 1,175 | | |
| | 55101600 | STORM SEWER REMOVAL 36" | FOOT | 103 | | |

## THE ILLINOIS STATE TOLL HIGHWAY AUTHORITY (TOLLWAY)

CONTRACT NO. I-18-4428

BRIDGE RECONSTRUCTION (BN 261) BURLINGTON NORTHERN SANTA FE (BNSF) RAILWAY OVER

THE TRI-STATE TOLLWAY (I-294)

MILE POST 26.6

SCHEDULE OF PRICES

| SP | PAY ITEM NUMBER | DESIGNATION | UNIT | QUANTITY | UNIT PRICE DOLLAR | AMOUNT DOLLAR |
|---|---|---|---|---|---|---|
| | 55101800 | STORM SEWER REMOVAL 42" | FOOT | 526 | | |
| | 55101900 | STORM SEWER REMOVAL 48" | FOOT | 8 | | |
| | 56100900 | WATER MAIN 12" | FOOT | 1,818 | | |
| | 58700300 | CONCRETE SEALER | SQ FT | 11,810 | | |
| | 59100100 | GEOCOMPOSITE WALL DRAIN | SQ YD | 3,613 | | |
| | 60200105 | CATCH BASINS, TYPE A, 4'-DIAMETER, TYPE 1 FRAME, OPEN LID | EACH | 10 | | |
| | 60200305 | CATCH BASINS, TYPE A, 4'-DIAMETER, TYPE 3 FRAME AND GRATE | EACH | 8 | | |
| | 60200805 | CATCH BASINS, TYPE A, 4'-DIAMETER, TYPE 8 GRATE | EACH | 4 | | |
| | 60203805 | CATCH BASINS, TYPE A, 5'-DIAMETER, TYPE 1 FRAME, OPEN LID | EACH | 2 | | |
| | 60206905 | CATCH BASINS, TYPE C, TYPE 1 FRAME, OPEN LID | EACH | 2 | | |
| | 60218400 | MANHOLES, TYPE A, 4'-DIAMETER, TYPE 1 FRAME, CLOSED LID | EACH | 4 | | |
| | 60221100 | MANHOLES, TYPE A, 5'-DIAMETER, TYPE 1 FRAME, CLOSED LID | EACH | 2 | | |
| | 60223700 | MANHOLES, TYPE A, 6'-DIAMETER, TYPE 1 FRAME, OPEN LID | EACH | 4 | | |
| | 60223800 | MANHOLES, TYPE A, 6'-DIAMETER, TYPE 1 FRAME, CLOSED LID | EACH | 5 | | |
| | 60224446 | MANHOLES, TYPE A, 7'-DIAMETER, TYPE 1 FRAME, CLOSED LID | EACH | 4 | | |
| | 60224459 | MANHOLES, TYPE A, 8'-DIAMETER, TYPE 1 FRAME, CLOSED LID | EACH | 4 | | |
| | 60224469 | MANHOLES, TYPE A, 9'-DIAMETER, TYPE 1 FRAME, CLOSED LID | EACH | 5 | | |

## THE ILLINOIS STATE TOLL HIGHWAY AUTHORITY (TOLLWAY)

CONTRACT NO. I-18-4428

BRIDGE RECONSTRUCTION (BN 261) BURLINGTON NORTHERN SANTA FE (BNSF) RAILWAY OVER

THE TRI-STATE TOLLWAY (I-294)

MILE POST 26.6

SCHEDULE OF PRICES

| SP | PAY ITEM NUMBER | DESIGNATION | UNIT | QUANTITY | UNIT PRICE DOLLAR | AMOUNT DOLLAR |
|---|---|---|---|---|---|---|
| | 60248900 | VALVE VAULTS, TYPE A, 5'-DIAMETER, TYPE 1 FRAME, CLOSED LID | EACH | 2 | | |
| | 60250200 | CATCH BASINS TO BE ADJUSTED | EACH | 1 | | |
| | 60253100 | CATCH BASINS TO BE RECONSTRUCTED WITH NEW TYPE 1 FRAME, CLOSED LID | EACH | 2 | | |
| | 60255800 | MANHOLES TO BE ADJUSTED WITH NEW TYPE 1 FRAME, CLOSED LID | EACH | 1 | | |
| | 60258100 | MANHOLES TO BE RECONSTRUCTED WITH NEW TYPE 1 FRAME, OPEN LID | EACH | 1 | | |
| | 60258200 | MANHOLES TO BE RECONSTRUCTED WITH NEW TYPE 1 FRAME, CLOSED LID | EACH | 2 | | |
| | 60300305 | FRAMES AND LIDS TO BE ADJUSTED | EACH | 3 | | |
| | 60406000 | FRAMES AND LIDS, TYPE 1, OPEN LID | EACH | 3 | | |
| | 60500040 | REMOVING MANHOLES | EACH | 17 | | |
| | 60500050 | REMOVING CATCH BASINS | EACH | 22 | | |
| | 60500060 | REMOVING INLETS | EACH | 1 | | |
| | 60500105 | FILLING MANHOLES | EACH | 1 | | |
| | 60600095 | CLASS SI CONCRETE (OUTLET) | CU YD | 8.0 | | |
| | 60603800 | COMBINATION CONCRETE CURB AND GUTTER, TYPE B-6.12 | FOOT | 2,900 | | |
| | 63200310 | GUARDRAIL REMOVAL | FOOT | 902 | | |

## THE ILLINOIS STATE TOLL HIGHWAY AUTHORITY (TOLLWAY)

**CONTRACT NO. I-18-4428**

**BRIDGE RECONSTRUCTION (BN 261) BURLINGTON NORTHERN SANTA FE (BNSF) RAILWAY OVER**

**THE TRI-STATE TOLLWAY (I-294)**

**MILE POST 26.6**

**SCHEDULE OF PRICES**

| SP | PAY ITEM NUMBER | DESIGNATION | UNIT | QUANTITY | UNIT PRICE DOLLAR | AMOUNT DOLLAR |
|---|---|---|---|---|---|---|
| | 66900530 | SOIL DISPOSAL ANALYSIS | EACH | 200 | | |
| BDE | 70300904 | PAVEMENT MARKING TAPE, TYPE IV 4" | FOOT | 94,077 | | |
| | 70600280 | IMPACT ATTENUATORS, TEMPORARY (SEVERE USE,NARROW), TEST LEVEL 3 | EACH | 8 | | |
| | 70600370 | IMPACT ATTENUATORS, RELOCATE (SEVERE USE, NARROW), TEST LEVEL 3 | EACH | 82 | | |
| | 72100100 | SIGN PANEL OVERLAY | SQ FT | 22 | | |
| | 72400200 | REMOVE SIGN PANEL ASSEMBLY - TYPE B | EACH | 1 | | |
| | 72400330 | REMOVE SIGN PANEL - TYPE 3 | SQ FT | 96 | | |
| | 72400720 | RELOCATE SIGN PANEL - TYPE 2 | SQ FT | 20 | | |
| | 72400730 | RELOCATE SIGN PANEL - TYPE 3 | SQ FT | 96 | | |
| | 72700100 | STRUCTURAL STEEL SIGN SUPPORT - BREAKAWAY | POUND | 912 | | |
| | 73000100 | WOOD SIGN SUPPORT | FOOT | 18 | | |
| | 73400100 | CONCRETE FOUNDATIONS | CU YD | 2.4 | | |
| | 73700100 | REMOVE GROUND MOUNTED SIGN SUPPORT | EACH | 2 | | |
| | 73700200 | REMOVE CONCRETE FOUNDATION - GROUND MOUNT | EACH | 2 | | |
| | 78000100 | THERMOPLASTIC PAVEMENT MARKING - LETTERS AND SYMBOLS | SQ FT | 7.0 | | |
| | 78000200 | THERMOPLASTIC PAVEMENT MARKING - LINE 4" | FOOT | 2,090 | | |
| | 78000600 | THERMOPLASTIC PAVEMENT MARKING - LINE 12" | FOOT | 66 | | |

## THE ILLINOIS STATE TOLL HIGHWAY AUTHORITY (TOLLWAY)

### CONTRACT NO. I-18-4428

### BRIDGE RECONSTRUCTION (BN 261) BURLINGTON NORTHERN SANTA FE (BNSF) RAILWAY OVER THE TRI-STATE TOLLWAY (I-294)

### MILE POST 26.6

### SCHEDULE OF PRICES

| SP | PAY ITEM NUMBER | DESIGNATION | UNIT | QUANTITY | UNIT PRICE DOLLAR | AMOUNT DOLLAR |
|---|---|---|---|---|---|---|
| | 78005110 | EPOXY PAVEMENT MARKING - LINE 4" | FOOT | 12,544 | | |
| | 78005130 | EPOXY PAVEMENT MARKING - LINE 6" | FOOT | 9,408 | | |
| | 78005150 | EPOXY PAVEMENT MARKING - LINE 12" | FOOT | 1,111 | | |
| | 81028180 | UNDERGROUND CONDUIT, GALVANIZED STEEL, 1 1/4" DIA. | FOOT | 6 | | |
| | 81028210 | UNDERGROUND CONDUIT, GALVANIZED STEEL, 2 1/2" DIA. | FOOT | 138 | | |
| | 81028730 | UNDERGROUND CONDUIT, COILABLE NONMETALLIC CONDUIT, 1 1/4" DIA. | FOOT | 729 | | |
| | 81702110 | ELECTRIC CABLE IN CONDUIT, 600V (XLP-TYPE USE) 1/C NO. 10 | FOOT | 549 | | |
| | 81702130 | ELECTRIC CABLE IN CONDUIT, 600V (XLP-TYPE USE) 1/C NO. 6 | FOOT | 1,617 | | |
| | 81800330 | AERIAL CABLE, 3-1/C NO. 6 WITH MESSENGER WIRE | FOOT | 1,600 | | |
| | 81800400 | AERIAL CABLE, 4-1/C NO. 2 WITH MESSENGER WIRE | FOOT | 2,648 | | |
| | 83600200 | LIGHT POLE FOUNDATION, 24" DIAMETER | FOOT | 53 | | |
| | 84200600 | REMOVAL OF LIGHTING UNIT, NO SALVAGE | EACH | 4 | | |
| | 84200804 | REMOVAL OF POLE FOUNDATION | EACH | 4 | | |
| | 87900100 | DRILL EXISTING FOUNDATION | EACH | 2 | | |
| * | X0300015 | CONCRETE WINGWALL REMOVAL | EACH | 4 | | |
| GBSP | X0320051 | CROSSHOLE SONIC LOGGING ACCESS DUCTS | FOOT | 9,070 | | |
| GBSP | X0320052 | CROSSHOLE SONIC LOGGING TESTING | EACH | 3 | | |
| * | X0322584 | REVETMENT MAT REMOVAL | SQ YD | 333 | | |

THE ILLINOIS STATE TOLL HIGHWAY AUTHORITY (TOLLWAY)

CONTRACT NO. I-18-4428

BRIDGE RECONSTRUCTION (BN 261) BURLINGTON NORTHERN SANTA FE (BNSF) RAILWAY OVER

THE TRI-STATE TOLLWAY (I-294)

MILE POST 26.6

SCHEDULE OF PRICES

| SP | PAY ITEM NUMBER | DESIGNATION | UNIT | QUANTITY | UNIT PRICE DOLLAR | AMOUNT DOLLAR |
|---|---|---|---|---|---|---|
| * | X0322916 | PROPOSED STORM SEWER CONNECTION TO EXISTING STORM SEWER | EACH | 1 | | |
| * | X0322917 | PROPOSED STORM SEWER CONNECTION TO EXISTING MANHOLE | EACH | 3 | | |
| * | X0322924 | RETAINING WALL REMOVAL | SQ FT | 589 | | |
| * | X0324761 | DRAINAGE SYSTEM (SPECIAL) | L SUM | 1 | | |
| * | X0325110 | BIAXIAL GEOGRID | SQ YD | 18,724 | | |
| * | X0325815 | REMOVE EXISTING CABLE | FOOT | 364 | | |
| * | X0326801 | COMBINED SEWERS TO BE CLEANED | FOOT | 1,275 | | |
| * | X0326804 | COMBINED SEWER REMOVAL 42" | FOOT | 607 | | |
| * | X0326998 | FURNISH AND INSTALL HANDRAIL | FOOT | 1,270 | | |
| * | X0327141 | LIGHTING STANDARD, TYPE 4A | EACH | 2 | | |
| * | X0327142 | LIGHTING STANDARD, TYPE 4B | EACH | 2 | | |
| * | X0327149 | RELOCATE BENCH | EACH | 1 | | |
| * | X0327267 | SLOPE INCLINOMETER | EACH | 2 | | |
| * | X0327357 | CONSTRUCTION VIBRATION MONITORING | L SUM | 1 | | |
| * | X0327754 | TEMPORARY BULKHEAD | EACH | 6 | | |
| * | X0795800 | COARSE AGGREGATE | TON | 12,837 | | |
| * | X0800003 | COARSE AGGREGATE BACKFILL (SPECIAL) | CU YD | 2,110 | | |

## THE ILLINOIS STATE TOLL HIGHWAY AUTHORITY (TOLLWAY)

CONTRACT NO. I-18-4428

BRIDGE RECONSTRUCTION (BN 261) BURLINGTON NORTHERN SANTA FE (BNSF) RAILWAY OVER

THE TRI-STATE TOLLWAY (I-294)

MILE POST 26.6

SCHEDULE OF PRICES

| SP | PAY ITEM NUMBER | DESIGNATION | UNIT | QUANTITY | UNIT PRICE DOLLAR | AMOUNT DOLLAR |
|---|---|---|---|---|---|---|
| GBSP | X0900064 | MEMBRANE WATERPROOFING SYSTEM FOR BURIED STRUCTURES | SQ YD | 2,542 | | |
| * | X1200080 | STORM SEWERS JACKED IN PLACE, 48" (SPECIAL) | FOOT | 296 | | |
| * | X1200140 | PRECAST CONCRETE BOX CULVERT (SPECIAL) | FOOT | 1,043 | | |
| * | X2200003 | FENCE (SPECIAL) | FOOT | 1,930 | | |
| * | X5030225 | CONCRETE STRUCTURES (SPECIAL) | CU YD | 36 | | |
| * | X5210015 | ELASTOMERIC BEARING ASSEMBLY, TYPE I (SPECIAL) | EACH | 64 | | |
| * | X5210025 | ELASTOMERIC BEARING ASSEMBLY, TYPE II (SPECIAL) | EACH | 16 | | |
| * | X5537500 | STORM SEWERS TO BE CLEANED 6" | FOOT | 167 | | |
| * | X5538000 | STORM SEWERS TO BE CLEANED 18" | FOOT | 63 | | |
| * | X5538400 | STORM SEWERS TO BE CLEANED 30" | FOOT | 272 | | |
| * | X5610651 | ABANDON EXISTING WATER MAIN, FILL WITH CLSM | FOOT | 1,793 | | |
| * | X6020293 | MANHOLES, TYPE A, 6'-DIAMETER, WITH 2 TYPE 1 FRAME, CLOSED LID, RESTRICTOR PLATE | EACH | 1 | | |
| * | X6020710 | CATCH BASIN TO BE ADJUSTED WITH SPECIAL FRAME AND GRATE | EACH | 2 | | |
| * | X6022850 | MANHOLE, SANITARY, 6' DIAMETER, TYPE 1 FRAME, CLOSED LID | EACH | 2 | | |
| * | X6022900 | CATCH BASINS TO BE RECONSTRUCTED (SPECIAL) | EACH | 2 | | |
| * | X6024200 | MANHOLES, TYPE A, 6'-DIAMETER, TYPE 1 FRAME, CLOSED LID, SPECIAL | EACH | 1 | | |
| * | X6026051 | SANITARY MANHOLES TO BE RECONSTRUCTED | EACH | 1 | | |
| * | X6026054 | SANITARY MANHOLES TO BE REMOVED | EACH | 2 | | |

## THE ILLINOIS STATE TOLL HIGHWAY AUTHORITY (TOLLWAY)

CONTRACT NO. I-18-4428

BRIDGE RECONSTRUCTION (BN 261) BURLINGTON NORTHERN SANTA FE (BNSF) RAILWAY OVER

THE TRI-STATE TOLLWAY (I-294)

MILE POST 26.6

SCHEDULE OF PRICES

| SP | PAY ITEM NUMBER | DESIGNATION | UNIT | QUANTITY | UNIT PRICE DOLLAR | AMOUNT DOLLAR |
|---|---|---|---|---|---|---|
| * | X6028000 | MANHOLES TO BE RECONSTRUCTED (SPECIAL) | EACH | 1 | | |
| * | X6040205 | FRAMES AND LIDS, SPECIAL | EACH | 2 | | |
| * | X6640050 | CHAIN LINK FENCE, 42" ATTACHED TO STRUCTURE (SPECIAL) | FOOT | 1,683 | | |
| * | X6640312 | CHAIN LINK GATES TO BE REMOVED AND RE-ERECTED | EACH | 2 | | |
| * | X7015005 | CHANGEABLE MESSAGE SIGN | CAL DAY | 365 | | |
| BDE | X7030005 | TEMPORARY PAVEMENT MARKING REMOVAL | SQ FT | 31,359 | | |
| * | X7200053 | REMOVE, STORE AND RE-ERECT SIGN PANEL (SPECIAL) | EACH | 29 | | |
| * | X7330086 | FURNISH AND INSTALL WALKWAY | FOOT | 3,917 | | |
| * | X8140105 | HANDHOLE (SPECIAL) | EACH | 2 | | |
| * | X8300001 | LIGHT POLE, SPECIAL | EACH | 2 | | |
| * | X8950130 | MODIFY EXISTING LIGHTING CONTROLLER | EACH | 1 | | |
| * | XX004360 | SANITARY SEWER BYPASS PUMPING | L SUM | 1 | | |
| * | Z0022800 | FENCE REMOVAL | FOOT | 644 | | |
| * | Z0033024 | MAINTAIN EXISTING LIGHTING SYSTEM | L SUM | 1 | | |
| * | Z0040000 | PIEZOMETER | EACH | 4 | | |
| * | Z0040530 | PIPE UNDERDRAIN REMOVAL | FOOT | 2,112 | | |
| GBSP | Z0046304 | PIPE UNDERDRAIN FOR STRUCTURES 4" | FOOT | 1,474 | | |

## THE ILLINOIS STATE TOLL HIGHWAY AUTHORITY (TOLLWAY)

CONTRACT NO. I-18-4428

BRIDGE RECONSTRUCTION (BN 261) BURLINGTON NORTHERN SANTA FE (BNSF) RAILWAY OVER

THE TRI-STATE TOLLWAY (I-294)

MILE POST 26.6

SCHEDULE OF PRICES

| SP | PAY ITEM NUMBER | DESIGNATION | UNIT | QUANTITY | UNIT PRICE DOLLAR | AMOUNT DOLLAR |
|---|---|---|---|---|---|---|
| GBSP | Z0046306 | PIPE UNDERDRAIN FOR STRUCTURES 6" | FOOT | 414 | | |
| * | Z0056648 | STORM SEWERS, TYPE 1, WATER MAIN QUALITY PIPE, 12" | FOOT | 33 | | |
| * | Z0056650 | STORM SEWERS, TYPE 1, WATER MAIN QUALITY PIPE, 15" | FOOT | 36 | | |
| * | Z0056668 | STORM SEWERS, TYPE 2, WATER MAIN QUALITY PIPE, 12" | FOOT | 67 | | |
| * | Z0056670 | STORM SEWERS, TYPE 2, WATER MAIN QUALITY PIPE, 18" | FOOT | 49 | | |
| * | Z0057950 | SANITARY SEWER 42" | FOOT | 615 | | |
| * | Z0065100 | SETTLEMENT PLATFORMS | EACH | 7 | | |
| * | Z0075400 | TIE RODS | EACH | 43 | | |
| * | Z0075496 | CONCRETE RETAINING WALL REMOVAL | FOOT | 1,171 | | |
| * | JI211110 | TOPSOIL EXCAVATION AND PLACEMENT | CU YD | 1,000 | | |
| * | JI211112 | TOPSOIL EXCAVATION AND DISPOSAL | CU YD | 18,380 | | |
| * | JI211126 | TOPSOIL FURNISH AND PLACE, 6" | SQ YD | 74,346 | | |
| * | JI213004 | EXPLORATION TRENCH, UTILITIES (HAND EXCAVATION) | FOOT | 100 | | |
| * | JI213006 | EXPLORATION TRENCH, UTILITIES (VACUUM EXCAVATION) | FOOT | 100 | | |
| * | JI406107 | ASPHALT TACK COAT | POUND | 4,475 | | |
| * | JI406510 | WARM-MIX ASPHALT SURFACE COURSE, MIX "D", N70 | TON | 1,012 | | |
| * | JI408100 | ASPHALT DAMP PROOFING | SQ YD | 903 | | |

## THE ILLINOIS STATE TOLL HIGHWAY AUTHORITY (TOLLWAY)

### CONTRACT NO. I-18-4428

### BRIDGE RECONSTRUCTION (BN 261) BURLINGTON NORTHERN SANTA FE (BNSF) RAILWAY OVER

### THE TRI-STATE TOLLWAY (I-294)

### MILE POST 26.6

### SCHEDULE OF PRICES

| SP | PAY ITEM NUMBER | DESIGNATION | UNIT | QUANTITY | UNIT PRICE DOLLAR | AMOUNT DOLLAR |
|---|---|---|---|---|---|---|
| * | JI420900 | DRILL AND GROUT #6 TIE BARS | EACH | 93 | | |
| * | JI440010 | CONCRETE MEDIAN BARRIER AND BASE REMOVAL | FOOT | 653 | | |
| * | JI481060 | AGGREGATE SHOULDERS, TYPE B 4" | SQ YD | 14 | | |
| * | JI481070 | AGGREGATE SHOULDERS, SPECIAL TYPE C | TON | 86 | | |
| * | JI481130 | AGGREGATE SHOULDERS WITH FILTER FABRIC, TYPE B 4" | SQ YD | 701 | | |
| * | JI482112 | WARM-MIX ASPHALT SHOULDERS (9 IN.) | SQ YD | 9,221 | | |
| * | JI503230 | MASS CONCRETE STRUCTURES | CU YD | 450.4 | | |
| * | JI542010 | END SECTION REMOVAL | EACH | 2 | | |
| * | JI580001 | RAILROAD DECK WATERPROOFING | SQ FT | 18,884 | | |
| * | JI593030 | ABANDON AND FILL EXISTING STORM SEWER | CU YD | 152 | | |
| * | JI601215 | SLOPE DRAIN, 15" | FOOT | 89 | | |
| * | JI601300 | PIPE UNDERDRAINS, 6" (SPECIAL) | FOOT | 16 | | |
| * | JI601320 | PIPE UNDERDRAINS, FABRIC LINED TRENCH 6" | FOOT | 2,469 | | |
| * | JI602117 | CATCH BASINS, TYPE G-2, TYPE G-2 MODIFIED FRAME AND GRATE | EACH | 14 | | |
| * | JI602184 | CATCH BASINS, TYPE A, 4'-DIAMETER, TYPE 20A FRAME AND GRATE | EACH | 2 | | |
| * | JI602367 | MANHOLE, TYPE A, 10'-DIAMETER, TYPE 20A FRAME AND GRATE | EACH | 4 | | |
| * | JI602368 | MANHOLE, TYPE A, 10'-DIAMETER, WITH TWO TYPE 1 FRAME, CLOSED LID, RESTRICTOR PLATE | EACH | 1 | | |

## THE ILLINOIS STATE TOLL HIGHWAY AUTHORITY (TOLLWAY)

### CONTRACT NO. I-18-4428

### BRIDGE RECONSTRUCTION (BN 261) BURLINGTON NORTHERN SANTA FE (BNSF) RAILWAY OVER THE TRI-STATE TOLLWAY (I-294)

### MILE POST 26.6

### SCHEDULE OF PRICES

| SP | PAY ITEM NUMBER | DESIGNATION | UNIT | QUANTITY | UNIT PRICE DOLLAR | AMOUNT DOLLAR |
|---|---|---|---|---|---|---|
| * | JI602791 | JUNCTION CHAMBER, LOCATION 1 | EACH | 1 | | |
| * | JI606015 | GUTTER, TYPE G-2, MODIFIED | FOOT | 2,875 | | |
| * | JI606020 | GUTTER, TYPE G-3 | FOOT | 471 | | |
| * | JI630002 | GALVANIZED STEEL PLATE BEAM GUARDRAIL, TYPE A, 6 FOOT POSTS | FOOT | 1,225 | | |
| * | JI631110 | TRAFFIC BARRIER TERMINAL, TYPE T1 (SPECIAL) TANGENT | EACH | 1 | | |
| * | JI631120 | TRAFFIC BARRIER TERMINAL, TYPE T2 | EACH | 3 | | |
| * | JI631135 | TRAFFIC BARRIER TERMINAL, TYPE T6B | EACH | 1 | | |
| * | JI637001 | CONCRETE BARRIER BASE | FOOT | 630 | | |
| * | JI637003 | CONCRETE BARRIER, DOUBLE FACE, 42 INCH | FOOT | 512 | | |
| * | JI664305 | RIGHT-OF-WAY FENCE, TYPE 1, 6' | FOOT | 3,150 | | |
| * | JI664310 | CORNER POST, RIGHT-OF-WAY FENCE, TYPE 1 | EACH | 9 | | |
| * | JI664315 | PULL POST, RIGHT-OF-WAY FENCE, TYPE 1 | EACH | 15 | | |
| * | JI664320 | END POST, RIGHT-OF-WAY FENCE, TYPE 1 | EACH | 11 | | |
| * | JI664325 | PEDESTRIAN GATE, RIGHT-OF-WAY FENCE, TYPE 1 | EACH | 5 | | |
| * | JI664400 | RIGHT OF WAY FENCE REMOVAL | FOOT | 4,596 | | |
| * | JI664620 | TEMPORARY CHAIN LINK FENCE 8' SCREENING, TYPE 2 | FOOT | 7,278 | | |
| * | JI669010 | REGULATED SUBSTANCES PRE-CONSTRUCTION PLAN | L SUM | 1 | | |
| * | JI669015 | ON-SITE MONITORING OF REGULATED SUBSTANCES | CAL DAY | 600 | | |
| * | JI669020 | REGULATED SUBSTANCES FINAL CONSTRUCTION REPORT | L SUM | 1 | | |
| * | JI680004 | HEADWALL TYPE I, 24" | EACH | 1 | | |

## THE ILLINOIS STATE TOLL HIGHWAY AUTHORITY (TOLLWAY)

CONTRACT NO. I-18-4428

BRIDGE RECONSTRUCTION (BN 261) BURLINGTON NORTHERN SANTA FE (BNSF) RAILWAY OVER

THE TRI-STATE TOLLWAY (I-294)

MILE POST 26.6

SCHEDULE OF PRICES

| SP | PAY ITEM NUMBER | DESIGNATION | UNIT | QUANTITY | UNIT PRICE DOLLAR | AMOUNT DOLLAR |
|---|---|---|---|---|---|---|
| * | JI680011 | HEADWALL TYPE II, 48" | EACH | 1 | | |
| * | JI680122 | SLOPED HEADWALL TYPE III, 15", 1:3 | EACH | 2 | | |
| * | JI680125 | SLOPED HEADWALL TYPE III, 24", 1:3 | EACH | 3 | | |
| * | JI680127 | SLOPED HEADWALL TYPE III, 30", 1:3 | EACH | 1 | | |
| * | JI680140 | SLOPED HEADWALL TYPE III, 6", 1:6 | EACH | 2 | | |
| * | JI680141 | SLOPED HEADWALL TYPE III, 12", 1:6 | EACH | 1 | | |
| * | JI704000 | TEMPORARY CONCRETE BARRIER | FOOT | 6,113 | | |
| * | JI704005 | RELOCATE TEMPORARY CONCRETE BARRIER | FOOT | 58,013 | | |
| * | JI725000 | TERMINAL MARKER - DIRECT APPLIED | EACH | 1 | | |
| * | JI761010 | RAISED PAVEMENT LANE MARKER, REFLECTOR | EACH | 378 | | |
| * | JI782014 | GUARDRAIL BARRIER REFLECTORS, TYPE B | EACH | 13 | | |
| * | JI782022 | BARRIER WALL REFLECTORS, TYPE C | EACH | 141 | | |
| * | JI811276 | CONDUIT ATTACHED TO STRUCTURE, 2" DIA., STAINLESS STEEL | FOOT | 20 | | |
| * | JI830210 | TEMPORARY WOOD POLE, 90 FEET, CLASS 2, TO REMAIN IN PLACE | EACH | 2 | | |
| ** | JS107360 | DUST CONTROL WATERING | UNIT | 330 | | |
| ** | JS120100 | TRAILER MOUNTED FULL MATRIX PORTABLE CHANGEABLE MESSAGE SIGNS | EACH | 2.0 | | |
| ** | JS250220 | SEEDING, CLASS 2E | ACRE | 0.7 | | |

THE ILLINOIS STATE TOLL HIGHWAY AUTHORITY (TOLLWAY)

CONTRACT NO. I-18-4428

BRIDGE RECONSTRUCTION (BN 261) BURLINGTON NORTHERN SANTA FE (BNSF) RAILWAY OVER

THE TRI-STATE TOLLWAY (I-294)

MILE POST 26.6

SCHEDULE OF PRICES

| SP | PAY ITEM NUMBER | DESIGNATION | UNIT | QUANTITY | UNIT PRICE DOLLAR | AMOUNT DOLLAR |
|---|---|---|---|---|---|---|
| ** | JS250314 | SEEDING, CLASS 4B | ACRE | 0.6 | | |
| ** | JS250318 | SEEDING, CLASS 4F | ACRE | 10.2 | | |
| ** | JS250320 | SEEDING, CLASS 5 | ACRE | 10.2 | | |
| ** | JS250324 | SEEDING, CLASS 5B | ACRE | 0.6 | | |
| ** | JS280020 | MANAGEMENT OF EROSION AND SEDIMENT CONTROL | CAL. MO. | 33 | | |
| ** | JS280040 | EROSION AND SEDIMENT CONTROL-CLEANOUT | CU YD | 50 | | |
| ** | JS280050 | SILT FENCE | FOOT | 7,515 | | |
| ** | JS280051 | RE-ERECT SILT FENCE | FOOT | 1,500 | | |
| ** | JS280070 | STABILIZED CONSTRUCTION ENTRANCE | SQ YD | 2,131 | | |
| ** | JS280080 | FLOTATION BOOM | FOOT | 200 | | |
| ** | JS280100 | SUPER SILT FENCE | FOOT | 608 | | |
| ** | JS280120 | TREE PROTECTION | FOOT | 500 | | |
| ** | JS280140 | TEMPORARY RIPRAP | TON | 108 | | |
| ** | JS280151 | SAME-DAY STABILIZATION | SQ YD | 40,366 | | |
| ** | JS280180 | RECTANGULAR INLET PROTECTION | EACH | 6 | | |
| ** | JS280205 | FILTER FABRIC INLET PROTECTION, COVER TYPE | EACH | 12 | | |
| ** | JS280210 | FILTER FABRIC INLET PROTECTION, BASKET TYPE | EACH | 54 | | |

## THE ILLINOIS STATE TOLL HIGHWAY AUTHORITY (TOLLWAY)

CONTRACT NO. I-18-4428

BRIDGE RECONSTRUCTION (BN 261) BURLINGTON NORTHERN SANTA FE (BNSF) RAILWAY OVER

THE TRI-STATE TOLLWAY (I-294)

MILE POST 26.6

SCHEDULE OF PRICES

| SP | PAY ITEM NUMBER | DESIGNATION | UNIT | QUANTITY | UNIT PRICE DOLLAR | AMOUNT DOLLAR |
|---|---|---|---|---|---|---|
| ** | JS280305 | TEMPORARY DITCH CHECKS | FOOT | 1,000 | | |
| * | JS670CSP | FIELD OFFICE, TYPE C (SPECIAL) | CAL MO | 36 | | |
| ** | JS671020 | MOBILIZATION, TOLLWAY (MODIFIED) | L SUM | 1 | | |
| * | JS701010 | MAINTENANCE OF TRAFFIC | L SUM | 1 | | |
| ** | JS810242 | CONDUIT ENCASED IN CONCRETE, 6" DIA. PVC | FOOT | 208 | | |
| ** | JS810875 | UNDERGROUND CONDUIT, COILABLE NONMETALLIC CONDUIT, 2" DIA. | FOOT | 1,865 | | |
| ** | JS810879 | UNDERGROUND CONDUIT, COILABLE NONMETALLIC CONDUIT, 4" DIA. | FOOT | 174 | | |
| ** | JS811032 | CONDUIT ATTACHED TO STRUCTURE, 1" DIA., PVC COATED GALVANIZED STEEL | FOOT | 393 | | |
| ** | JS812023 | CONDUIT EMBEDDED IN STRUCTURE, 2" DIA., PVC | FOOT | 45 | | |
| ** | JS812025 | CONDUIT EMBEDDED IN STRUCTURE, 3" DIA., PVC | FOOT | 738 | | |
| ** | JS813001 | JUNCTION BOX, STAINLESS STEEL, EMBEDDED IN STRUCTURE, 20" X 12" X 8" | EACH | 1 | | |
| ** | JS813022 | JUNCTION BOX, STAINLESS STEEL, ATTACHED TO STRUCTURE, 6" X 6" X 4" | EACH | 5 | | |
| ** | JS813053 | JUNCTION BOX, STAINLESS STEEL, ATTACHED TO STRUCTURE, 12" X 10" X 6" | EACH | 1 | | |
| * | JS813083 | JUNCTION BOX, STAINLESS STEEL, ATTACHED TO STRUCTURE, 18" X 18" X 8" | EACH | 2 | | |
| ** | JS814002 | HEAVY-DUTY HANDHOLE, TOLLWAY | EACH | 2 | | |
| ** | JS817211 | ELECTRIC CABLE IN CONDUIT, 600V (XLP-TYPE USE) 1/C NO. 10 | FOOT | 2,206 | | |
| ** | JS817212 | ELECTRIC CABLE IN CONDUIT, 600V (XLP-TYPE USE) 1/C NO. 8 | FOOT | 2,309 | | |

THE ILLINOIS STATE TOLL HIGHWAY AUTHORITY (TOLLWAY)

CONTRACT NO. I-18-4428

BRIDGE RECONSTRUCTION (BN 261) BURLINGTON NORTHERN SANTA FE (BNSF) RAILWAY OVER

THE TRI-STATE TOLLWAY (I-294)

MILE POST 26.6

SCHEDULE OF PRICES

| SP | PAY ITEM NUMBER | DESIGNATION | UNIT | QUANTITY | UNIT PRICE DOLLAR | AMOUNT DOLLAR |
|---|---|---|---|---|---|---|
| ** | JS817213 | ELECTRIC CABLE IN CONDUIT, 600V (XLP-TYPE USE) 1/C NO. 6 | FOOT | 212 | | |
| ** | JS817215 | ELECTRIC CABLE IN CONDUIT, 600V (XLP-TYPE USE) 1/C NO. 2 | FOOT | 8,804 | | |
| ** | JS821002 | UNDERPASS LUMINAIRE, 150 WATT, HIGH PRESSURE SODIUM VAPOR | EACH | 4 | | |
| ** | JS821003 | TEMPORARY LUMINAIRE, SODIUM VAPOR, HORIZONTAL MOUNT, 400 WATT | EACH | 8 | | |
| ** | JS821110 | UNDERPASS LUMINAIRE, LED | EACH | 4 | | |
| ** | JS830027 | TEMPORARY WOOD POLE, 50 FT., CLASS 4 | EACH | 4 | | |
| ** | JS830030 | TEMPORARY WOOD POLE, 60 FT., CLASS 4 | EACH | 3 | | |
| ** | JS830033 | TEMPORARY WOOD POLE, 70 FT., CLASS 3 | EACH | 1 | | |
| ** | JS830034 | TEMPORARY WOOD POLE, 70 FT., CLASS 3, 15 FT. MAST ARM | EACH | 8 | | |
| * | JS830145 | WOOD POLE, 45 FEET, CLASS 2 | EACH | 5 | | |
| ** | JS836007 | LIGHT POLE FOUNDATION (ROADWAY) MEDIAN, TYPE 3 | EACH | 4 | | |
| ** | JS842100 | REMOVAL OF UNDERPASS LUMINAIRE | EACH | 4 | | |
| ** | JS842105 | POLE FOUNDATION, REMOVED | EACH | 4 | | |
| ** | JS846001 | MAINTAIN LIGHTING SYSTEM | L SUM | 1 | | |
| * | JT130707 | STANDBY GENERATOR AND AUTOMATIC TRANSFER SWITCH | L SUM | 1 | | |
| * | JT130708 | TEMPORARY PORTABLE GENERATOR | L SUM | 1 | | |
| * | JT130709 | WELL HOUSE ELECTRICAL WORK | L SUM | 1 | | |
| * | JT131005 | BUILDING INSPECTIONS | L SUM | 1 | | |
| * | JT132810 | ITS POLE MOUNTED ENCLOSURE (CCTV OR MVDS) | EACH | 1 | | |
| * | JT132814 | ITS DISCONNECT SWITCH ASSEMBLY | EACH | 1 | | |

## THE ILLINOIS STATE TOLL HIGHWAY AUTHORITY (TOLLWAY)

CONTRACT NO. I-18-4428

BRIDGE RECONSTRUCTION (BN 261) BURLINGTON NORTHERN SANTA FE (BNSF) RAILWAY OVER

THE TRI-STATE TOLLWAY (I-294)

MILE POST 26.6

SCHEDULE OF PRICES

| SP | PAY ITEM NUMBER | DESIGNATION | UNIT | QUANTITY | UNIT PRICE DOLLAR | AMOUNT DOLLAR |
|---|---|---|---|---|---|---|
| * | JT132820 | CCTV CAMERA, ITS ASSEMBLY (TOLLWAY) | EACH | 1 | | |
| * | JT132830 | FIBER OPTIC COMMUNICATIONS, ITS ASSEMBLY | EACH | 1 | | |
| * | JT134000 | MAINTAIN INTELLIGENT TRANSPORTATION SYSTEMS | L SUM | 1 | | |
| * | JT134037 | ITS ELEMENT SITE GROUNDING – POLE MOUNTED ASSEMBLY | EACH | 1 | | |
| * | JT135042 | WEBCAM | EACH | 1 | | |
| * | JT160132 | HANDHOLE FOR SINGLE MODE FIBER OPTIC CABLE, 48"X72"X36" | EACH | 13 | | |
| * | JT211A11 | SUBGRADE AGGREGATE 12 IN. | CU YD | 1,546 | | |
| * | JT280500 | SEDIMENT FILTER BAG | EACH | 30 | | |
| * | JT280510 | FLOC LOG | EACH | 100 | | |
| * | JT280530 | IN-LINE FLOCCULATION SYSTEM | EACH | 3 | | |
| * | JT285055 | ARTICULATED CONCRETE BLOCK REVETMENT SYSTEM, TYPE 1 | SQ YD | 503 | | |
| * | JT311060 | AGGREGATE SUBBALLAST (SPECIAL) | CU YD | 11,033 | | |
| * | JT546000 | TELEVISION INSPECTION OF SEWER | FOOT | 4,380 | | |
| * | JT599040 | REMOVAL OF EXISTING NOISE ABATEMENT WALL | SQ FT | 6,805 | | |
| * | JT599P01 | PERFORMANCE BASED NOISE ABATEMENT WALL (PRECAST CONCRETE) NO. 1 | L SUM | 1 | | |
| * | JT637023 | CONCRETE MEDIAN BARRIER TRANSITION, TYPE V-F | FOOT | 118 | | |
| * | JT701030 | SUPPLEMENTAL BARRICADE | EACH/DAY | 1,000 | | |
| * | JT701031 | SUPPLEMENTAL SIGNING | SQ FT | 200 | | |
| * | JT701032 | SUPPLEMENTAL FLASHING ARROW BOARD (PER DAY) | EACH/DAY | 30 | | |
| * | JT701033 | SUPPLEMENTAL FLASHING ARROW BOARD (PER WEEK) | EACH/WEEK | 4 | | |

## THE ILLINOIS STATE TOLL HIGHWAY AUTHORITY (TOLLWAY)

**CONTRACT NO. I-18-4428**

**BRIDGE RECONSTRUCTION (BN 261) BURLINGTON NORTHERN SANTA FE (BNSF) RAILWAY OVER**

**THE TRI-STATE TOLLWAY (I-294)**

**MILE POST 26.6**

**SCHEDULE OF PRICES**

| SP | PAY ITEM NUMBER | DESIGNATION | UNIT | QUANTITY | UNIT PRICE DOLLAR | AMOUNT DOLLAR |
|---|---|---|---|---|---|---|
| * | JT701034 | SUPPLEMENTAL FLASHING ARROW BOARD (PER MONTH) | EACH/ MONTH | 4 | | |
| * | JT701035 | SUPPLEMENTAL MAINTENANCE OF TRAFFIC | DAY | 30 | | |
| * | JT703104 | LATE SEASON TEMPORARY PAVEMENT MARKING, 4" | FOOT | 243,352 | | |
| * | JT726040 | REMOVE AND REINSTALL MILE POST MARKER | EACH | 2 | | |
| * | JT783005 | WATERBLAST PAVEMENT MARKING REMOVAL WITH VACUUM RECOVERY | SQ FT | 90,051 | | |
| * | JT783009 | RAISED PAVEMENT LANE MARKER, REFLECTOR REMOVAL | EACH | 378 | | |
| * | JT810873 | UNDERGROUND CONDUIT, COILABLE NONMETALLIC CONDUIT, SDR 11, 1 1/4" DIA. | FOOT | 272 | | |
| * | JT810874 | UNDERGROUND CONDUIT, COILABLE NONMETALLIC CONDUIT, SDR 11, 1 1/2" DIA. | FOOT | 2,575 | | |
| * | JT810881 | UNDERGROUND CONDUIT, COILABLE NONMETALLIC CONDUIT, SDR 11, 6" DIA. | FOOT | 1,782 | | |
| ** | JT830042 | WOOD POLE, 90 FT., CLASS 2 | EACH | 4 | | |
| * | JT836029 | ITS CONCRETE SERVICE PAD, TYPE C | EACH | 1 | | |
| * | JT844010 | REMOVE AND REINSTALL LIGHTING UNIT | EACH | 4 | | |
| * | JT900442 | CURED-IN-PLACE PIPE LINER, 42" | FOOT | 667 | | |
| * | JT901056 | LOCATOR TRACER WIRE | FOOT | 5,169 | | |
| * | JT901135 | DEWATERING, SPECIAL | L SUM | 1 | | |
| | | | | | TOTAL AMOUNT OF CORE WORK: | |
| | | | | | | |
| * | JT155001 | CONTRACTOR'S QUALITY PROGRAM | L SUM | 1 | $1,110,000 | $1,110,000.00 |
| | | | | | | |

## THE ILLINOIS STATE TOLL HIGHWAY AUTHORITY (TOLLWAY)

### CONTRACT NO. I-18-4428

### BRIDGE RECONSTRUCTION (BN 261) BURLINGTON NORTHERN SANTA FE (BNSF) RAILWAY OVER THE TRI-STATE TOLLWAY (I-294)

### MILE POST 26.6

### SCHEDULE OF PRICES

| SP | PAY ITEM NUMBER | DESIGNATION | UNIT | QUANTITY | UNIT PRICE DOLLAR | AMOUNT DOLLAR |
|---|---|---|---|---|---|---|
| * | JT150100 | CONTRACT SPECIFIED EXTRA WORK ITEMS | UNIT | 100,000 | $ 1.00 | $ 100,000.00 |
| * | JT151500 | CONTRACT ADJUSTMENT ALLOWANCE FOR TEMPERATURE CONTROL OF CONCRETE | UNIT | 75,000 | $ 1.00 | $ 75,000.00 |
| * | JT154005 | EMERGENCY PAVEMENT AND SHOULDER REPAIRS | UNIT | 25,000 | $ 1.00 | $ 25,000.00 |
| * | JT154016 | ALLOWANCE FOR UNFORESEEN EROSION CONTROL MEASURES | UNIT | 20,000 | $ 1.00 | $ 20,000.00 |
| * | JT154045 | CONTRACT ALLOWANCE FOR COLD WEATHER PAVEMENT MARKINGS | UNIT | 50,000 | $ 1.00 | $ 50,000.00 |
| * | JT154051 | CONTRACT ALLOWANCE FOR UNSUITABLE SOIL | UNIT | 6,000,000 | $ 1.00 | $ 6,000,000.00 |
| * | JT154067 | CONTRACT ALLOWANCE FOR CONSTRUCTIONWORKS APPRENTICES | UNIT | 100,000 | $ 1.00 | $ 100,000.00 |
| * | JT154100 | ALLOWANCE FOR SUPPLEMENTAL FLAGGING | UNIT | 300,000 | $ 1.00 | $ 300,000.00 |
| * | JT154103 | ALLOWANCE FOR RAILROAD FLAGGING AND SERVICES | UNIT | 13,000,000 | $ 1.00 | $ 13,000,000.00 |
| * | JT154150 | ALLOWANCE FOR STEEL COSTS ADJUSTMENT | UNIT | 75,000 | $ 1.00 | $ 75,000.00 |
| * | JT154160 | ALLOWANCE FOR FUEL COSTS ADJUSTMENT | UNIT | 50,000 | $ 1.00 | $ 50,000.00 |
| | | | | | | |
| | 999NEG20 | DAMAGE TO ILLINOIS TOLLWAY'S OPERATIONAL FACILITIES PER S.P. 115.5 - TRI-STATE | HOUR | | (10,000) | |
| | 999NEG30 | DAMAGE TO ILLINOIS TOLLWAY'S OPERATIONAL FACILITIES PER S.P. 115.5 - ALL ROADWAYS OFF-PEAK | HOUR | | (2,000) | |
| | 999NEG31 | DAMAGE TO ELECTRICAL FACILITIES PER TOLLWAY SUPPL. SPEC. 107.30 (b) | INC/DAY | | (1,000) | |

## THE ILLINOIS STATE TOLL HIGHWAY AUTHORITY (TOLLWAY)

**CONTRACT NO. I-18-4428**

**BRIDGE RECONSTRUCTION (BN 261) BURLINGTON NORTHERN SANTA FE (BNSF) RAILWAY OVER**

**THE TRI-STATE TOLLWAY (I-294)**

**MILE POST 26.6**

**SCHEDULE OF PRICES**

| SP | PAY ITEM NUMBER | DESIGNATION | UNIT | QUANTITY | UNIT PRICE DOLLAR | AMOUNT DOLLAR |
|---|---|---|---|---|---|---|
| | 999NEG32 | LIQUIDATED DAMAGES FOR DELAY IN SUBMITTAL OF PROGRESS SCHEDULE PER TOLLWAY SUPPL. SPEC. 108.02 (e) | DAY | | (300) | |
| | 999NEG33 | NON-COMPLIANCE WITH EROSION AND SEDIMENT CONTROL PER TOLLWAY SUPPL. SPEC. 280.02 (b) (1) | INC/DAY | | See Note 2 | |
| | 999NEG34 | NON-COMPLIANCE WITH RESPONSIBILITY FOR CONSTRUCTION HAULING EQUIPMENT PER TOLLWAY SUPPL. SPEC. 105.15 | DAY | | (1,000) | |
| | 999NEG35 | FAILURE TO RESPOND TO REGULATORY AGENCY REQUESTS, PER TOLLWAY SUPPL. SPEC. 280.02 (b) (2) | OCCUR | | (25,000) | |
| | 999NEG37 | NON-COMPLIANCE WITH TOLLWAY MAINTENANCE OF TRAFFIC PER TOLLWAY SUPPL. SPEC. 701.01 (b) (1) | INC/DAY | | (2,500) | |
| | 999NEG38 | FAILURE TO RESPOND TO RE-ESTABLISH DEVICES PER TOLLWAY SUPPL. SPEC. 701.01 (b) (2) | OCCUR | | (2,500) | |
| | 999NEG39 | FAILURE TO REPAIR IMPACT ATTENUATORS, TEMPORARY PER TOLLWAY SUPPL. SPEC. 701.01 (b) (3) | OCCUR | | (2,500) | |
| | 999NEG40 | LOSS OR DAMAGE TO TOLLWAY OWNED DEVICES PER TOLLWAY SUPPL. SPEC. 701.01 (b) (4) | SQ. FT. | | (100) | |
| | 999NEG42 | NON-COMPLIANCE WITH MAINTAIN LIGHTING SYSTEM PER TOLLWAY SUPPL. SPEC. 846.06 (a) | INC/DAY | | (1,000) | |
| | 999NEG43 | FAILURE TO RESPOND TO MAINTAIN LIGHTING SYSTEM PER TOLLWAY SUPPL. SPEC. 846.06 (b) | OCCUR | | (1,000) | |
| | 999NEG44 | LIQUIDATED DAMAGES FOR NON-COMPLETION PER S.P. 105.1.1 | CAL DAY | | (12,000) | |
| | 999NEG45 | LIQUIDATED DAMAGES FOR NON-COMPLETION PER S.P. 105.1.2 | CAL DAY | | (42,000) | |
| | 999NEG46 | LIQUIDATED DAMAGES FOR NON-COMPLETION PER S.P. 105.1.3 | CAL DAY | | (12,000) | |
| | 999NEG47 | LIQUIDATED DAMAGES FOR NON-COMPLETION PER S.P. 105.1.4 | CAL DAY | | (62,000) | |
| | 999NEG48 | LIQUIDATED DAMAGES FOR NON-COMPLETION PER S.P. 105.1.5 | CAL DAY | | (62,000) | |

## THE ILLINOIS STATE TOLL HIGHWAY AUTHORITY (TOLLWAY)

**CONTRACT NO. I-18-4428**

**BRIDGE RECONSTRUCTION (BN 261) BURLINGTON NORTHERN SANTA FE (BNSF) RAILWAY OVER**

**THE TRI-STATE TOLLWAY (I-294)**

**MILE POST 26.6**

**SCHEDULE OF PRICES**

| SP | PAY ITEM NUMBER | DESIGNATION | UNIT | QUANTITY | UNIT PRICE DOLLAR | AMOUNT DOLLAR |
|---|---|---|---|---|---|---|
| | 999NEG49 | DAMAGE TO FIBER OPTIC UTILITIES PER S.P. 115.3 | OCCUR | | (10,000) | |
| | 999NEG52 | FAILURE TO RESPOND FOR PATCHING BARRICADES PER PORTLAND CEMENT CONCRETE PATCHING SPECIAL PROVISION | OCCUR | | (500) | |
| | 999NEG53 | NON-COMPLIANCE WITH CONTRACTOR QUALITY PROGRAM SPECIAL PROVISION | OCCUR | | (1,000) | |
| | 999NEG54 | DAMAGE TO TOLLWAY MULTI-MODE CABLE, DMS SIGNS, CAMERAS, TELECOMMUNICATION, CABLE, ELECTRICAL, WATER AND SEWER PER S.P. 115.4 | OCCUR | | (1,000) | |
| | 999NEG90 | ONE LANE OR RAMP BLOCKED PER S.P. FAILURE TO OPEN LANES TO TRAFFIC | 15 MINUTES | | (3,000) | |
| | | **ADJUSTMENTS** | | | | |
| | 999ADJ20 | PROTECTION METHOD I FOR CONCRETE IN SUBSTRUCTURES, CULVERTS, PUMP HOUSES, AND RETAINING WALLS AS PER IDOT Article 503.22 | CU YD | | See Note 1 | |
| | 999ADJ21 | PROTECTION METHOD II FOR CONCRETE IN SUBSTRUCTURES, CULVERTS, PUMP HOUSES, AND RETAINING WALLS AS PER IDOT Article 503.22 | CU YD | | See Note 1 | |
| | 999ADJ24 | PROTECTION METHODS I, II or III FOR CONCRETE IN FOOTINGS AS PER IDOT Article 503.22 | CU YD | | See Note 1 | |
| | 999ADJ25 | PROTECTION METHODS I FOR CONCRETE IN SLOPE WALLS AS PER IDOT Article 503.22 | SQ YD | | See Note 1 | |

## THE ILLINOIS STATE TOLL HIGHWAY AUTHORITY (TOLLWAY)

**CONTRACT NO. I-18-4428**

**BRIDGE RECONSTRUCTION (BN 261) BURLINGTON NORTHERN SANTA FE (BNSF) RAILWAY OVER**

**THE TRI-STATE TOLLWAY (I-294)**

**MILE POST 26.6**

**SCHEDULE OF PRICES**

| SP | PAY ITEM NUMBER | DESIGNATION | UNIT | QUANTITY | UNIT PRICE DOLLAR | AMOUNT DOLLAR |
|---|---|---|---|---|---|---|
| | 999ADJ45 | CONSTRUCTIONWORKS APPRENTICES WAGE RATE | HOUR | | 15.00 | |
| | | TOTAL AMOUNT OF CONTRACTOR'S QUALITY PROGRAM (CQP) + CONTINGENCY WORK | | | | 20,905,000 |

| | |
|---|---|
| TOTAL AMOUNT OF CORE WORK + AMOUNT OF CONTRACTOR'S QUALITY PROGRAM + TOTAL AMOUNT OF CONTINGENCY WORK = TOTAL AMOUNT OF BASE BID | |
| BID CREDIT | |
| AWARD CRITERIA | |

LEGEND FOR SP COLUMN

| | |
|---|---|
| * | INDICATES SPECIAL PROVISION |
| ** | INDICATES TOLLWAY SUPPLEMENTAL SPECIFICATIONS |
| *** | INDICATES IDOT RECURRING SPECIAL PROVISION |
| BDE | INDICATES IDOT BDE SPECIAL PROVISION |
| GBSP | INDICATES IDOT GUIDE BRIDGE SPECIAL PROVISION |

**Note 1: The Contractor should leave the unit price value blank. The unit price will be entered by the Tollway after receipt of bids.**

**Note 2: The Contractor should leave the unit price value blank. The deduction base value is $1,000.00 and will be adjusted by a Gravity Adjustment Factor according to Article 280.02(b)(1) Table A of the Supplemental Specifications, assessed for each infraction.**

## THE ILLINOIS STATE TOLL HIGHWAY AUTHORITY

### I-18-4428 Tri-State Tollway (I-294), Bridge Reconstruction (BN 261) Burlington Northern Santa Fe Railway (BNSF) over the Tri-State Tollway (I-294)

Date: June 4, 2019
Re: Request for Information Received from Plan Holders

---

***QUESTION #1***
The latest bid form that was issued in Addendum No. 2 contains pay items 66900200 Non Special Waste Disposal and 66900205 Special Waste Disposal; however these items are listed as zero quantity. I realize the items were removed via addendum, but they still appear on the bid form. Should we bid these items as .01 for a unit price, or leave them blank? Page I-1 of the documents states that we can not have items with prices of $0.00, but with a zero quantity, we have no choice. Please clarify, or remove these items.

***ANSWER #1***
The P-Page revision will be included in Addendum No. 4.

---

***QUESTION #2***
I did not see a BIT COST ADJUSTMENT option. There are Fuel & Steel adjustment options but not any asphalt. With a completion in 2022 this would seem necessary.

***ANSWER #2***
A Bituminous Cost Adjustment will not be included in this Contract.

---

***QUESTION #3***
will the department provide an update P-Page with the revised quantities as updated in Addendum No.1 & No.2?

***ANSWER #3***
P-Page revisions have been provided in Addendum No. 1, 2, and 4.

---

***QUESTION #4***
Does all existing ballast and sub ballast have to be removed in it's entirety from 85+20 to 119+18? The reason I ask is that some of the existing ballast is in an embankment area. Not acceptable embankment? Same can be said of the existing sub ballast.

***ANSWER #4***
Special Provision "EARTH AND ROCK EXCAVATION" Section 202.03 Condition 1 applies for areas within the railroad right-of-way. Existing ballast and sub-ballast under the tracks will be removed and disposed of according to the special provisions. Existing suitable embankment may remain.

**ADDENDUM NO. 3**
**TO**
**CONTRACT REQUIREMENTS**
**FOR CONTRACT I-18-4428**
**ILLINOIS STATE TOLL HIGHWAY AUTHORITY**

**Date: May 31, 2019**

For which proposals will be received by the Illinois State Toll Highway Authority at its offices, 2700 Ogden Avenue, Downers Grove, Illinois 60515 until 10:30:00 A.M. local time, **June 6, 2019.**

## NOTICE OF REVISION TO CONTRACT

**NOTES:**

1. Plan-Holder's Requests for Information received by 2:00pm (CDT), May 24, 2019 and not included in Addendum No. 1 or Addendum No. 2 are attached for information.

---

**END OF ADDENDUM CHANGES**

## THE ILLINOIS STATE TOLL HIGHWAY AUTHORITY

### I-18-4428 Tri-State Tollway (I-294), Bridge Reconstruction (BN 261) Burlington Northern Santa Fe Railway (BNSF) over the Tri-State Tollway (I-294)

Date: May 31, 2019
Re: Request for Information Received from Plan Holders

---

***QUESTION #1***

*Note this question and response provides clarification to Question #22 Request for Information Received from Plan Holders included in Addendum No. 1:*

*Pre-Bid Meeting Open Discussion question:* Railroad may require ballast and sub-ballast to be removed and disposed. This may potentially be classified as Non-Special or Special Waste. Verify that plan quantities include this removal and classification provided.

***ANSWER #1***

The ballast removal and disposal is included in EARTH EXCAVATION.

---

***QUESTION #2***

Note 5 on Drawings 323 and 326 states that all Pile will be vibrated into place. How will the Bearing of these pile be checked? What if it is not possible to vibrate them down to required depth?

***ANSWER #2***

Vibrating piles at each abutment is a precaution to working in proximity of the sewer pipes running parallel to the Tollway abutments. The owner of the utility is concerned driving piles may disturb the soil surrounding the sewer pipe. Contractor may coordinate with the utility owner as needed. Piles are bearing on Rock.

---

***QUESTION #3***

*Note this question and response provides clarification to Question #38 Request for Information Received from Plan Holders included in Addendum No. 2.*

Would you happen to know if there was any plan of extending the bid date on this project?

***ANSWER #3***

Prior to advertisement of I-18-4428 Contract Documents on May 9, 2019, a not-for-bid plan set and 100-series contract special provisions were issued on April 15, 2019 for industry review which allows additional review time prior to bidding. Bid opening will not be extended, and the Bid opening will be at 10:30 A.M. on June 6, 2019. This schedule is required to meet a third party agreement timelines critical to the completion of the project.

---

**ADDENDUM NO. 2**
**TO**
**CONTRACT REQUIREMENTS**
**FOR CONTRACT I-18-4428**
**ILLINOIS STATE TOLL HIGHWAY AUTHORITY**

**Date: May 30, 2019**

For which proposals will be received by the Illinois State Toll Highway Authority at its offices, 2700 Ogden Avenue, Downers Grove, Illinois 60515 until 10:30:00 A.M. local time, **June 6, 2019.**

## NOTICE OF REVISION TO CONTRACT

**NOTES:**

1. Revised Schedule of Price pages P-5RR, P-14RR, P-23R, P-24R, P-25RR, P-26R, P-30R accompany this Addendum and must be inserted into the Contract Proposal by the Bidder. Note, all P-Pages have been included as part of this Addendum.

2. The following revised Special Provisions pages are included with this Addendum:
   Volume II: J-IR thru J-IXR, J-20RR, J-95R, J-103AR, J-103BR, J-103CR, J-104RR, J-105RR, J-129R, J-130R, J-131R, J-147RR, J-151RR, J-160R, J-164R, J-182R, J-241R, J-242R, J-411R, J-413R, J-416R, J-417R, J-424R, J-445R

3. The following new Special Provisions pages are included with this Addendum:
   Volume II: J-IXA, J-117A thru J-117E, J-350A thru J-350I, J-360A thru J-360Y, J-445A, J-445B, J-450A

4. The following revised Contract Drawings are included with this Addendum.
   Volume 1: Drawings 5, 6, 130, 134, 138, 163, 235
   Volume 2: Drawings 274, 307, 308, 323, 324, 326, 327, 329, 343, 344, 347, 351, 355, 360, 382, 383

5. The following new Contract Drawings are included with this Addendum.
   Volume 1: Drawings 14A, 240A thru 240E

6. The following revised Contract Drawings will be issued to the successful Bidder.
   Volume 1: Drawings 9, 10, 12, 13, 14, 50, 53, 56, 59, 62, 65, 137
   Volume 2: Drawings 266, 268, 305, 318, 325, 356, 376

7. The following Computer-Aided Design (CAD) files will be uploaded to the Online Plan Room as part of this Addendum to be consistent with the revised Special Provision 121 included as part of Addendum No. 1:
   4428-pr-terrain-model.dxf, 4428-terrain-model.dxf, 4428-3D-prstr.dxf,
   4428-3D-rdy-001.dxf, 4428-3D-rr-001.dxf, 4428-3D-rr-002.dxf
   4428-3D-util.dxf, 4428-drain-SUDA.dxf, 4428-drain_interim-SUDA.dxf

8. Plan-Holder's Requests for Information received by 2:00pm (CDT), May 24, 2019 and not included in Addendum No. 1 are attached for information:

## CHANGES TO THE CONTRACT REQUIREMENTS

## CHANGES TO THE SCHEDULE OF PRICES

**SUMMARY OF REVISIONS TO PAY ITEM QUANTITIES**

| SP | PAY ITEM NUMBER | DESCRIPTION | UNITS | ORIGINAL QTY | CHANGE | NEW QTY |
|---|---|---|---|---|---|---|
| * | 20201200 | REMOVAL AND DISPOSAL OF UNSUITABLE MATERIAL | CU YD | 13,630 | +4,730 | 18,360 |
| | 81800330 | AERIAL CABLE, 3-1/C NO. 6 WITH MESSENGER WIRE | FOOT | 0 | +1,600 | 1,600 |
| ** | JS810875 | UNDERGROUND CONDUIT, COILABLE NONMETALLIC CONDUIT, 2" DIA. | FOOT | 1,533 | +332 | 1,865 |
| ** | JS817212 | ELECTRICAL CABLE IM CONDUIT, 600V (XLP-TYPE USE) 1/C NO. 8 | FOOT | 2,203 | +106 | 2,309 |
| ** | JS817213 | ELECTRICAL CABLE IM CONDUIT, 600V (XLP-TYPE USE) 1/C NO. 6 | FOOT | 0 | +212 | 212 |
| * | JT132810 | ITS POLE MOUNTED ENCLOSURE (CCTV OR MVDS) | EACH | 0 | +1 | 1 |
| * | JT132814 | ITS DISCONNECT SWITCH ASSEMBLY | EACH | 0 | +1 | 1 |
| * | JT132830 | FIBER OPTIC COMMUNICATIONS, ITS ASSEMBLY | EACH | 0 | +1 | 1 |
| * | JT134000 | MAINTAIN INTELLIGENT TRANSPORTATION SYSTEMS | L SUM | 0 | +1 | 1 |
| * | JT134037 | ITS ELEMENT SITE GROUNDING – POLE MOUNTED ASSEMBLY | EACH | 0 | +1 | 1 |
| * | JT160132 | HANDHOLE FOR SINGLE MODE FIBER OPTIC CABLE, 48"x72"x36" | EACH | 10 | +3 | 13 |
| * | JT810873 | UNDERGROUND CONDUIT, COILABLE NONMETALLIC CONDUIT, SDR 11, 1 1//4" DIA. | FOOT | 0 | +272 | 272 |
| * | JT810881 | UNDERGROUND CONDUIT, COILABLE NONMETALLIC CONDUIT, SDR 11, 6" DIA. | FOOT | 1,322 | +460 | 1,782 |
| * | JT836029 | ITS CONCRETE SERVICE PAD, TYPE C | EACH | 0 | +1 | 1 |
| * | JT901056 | LOCATOR TRACER WIRE | FOOT | 0 | +5,169 | 5,169 |

* Denotes Special Provision
** Denotes Tollway Supplemental Specifications
GBSP Denotes IDOT Guide Bridge Special Provision

**Change #1**
Contract Requirements, Volume II, Replace Pages P-5R, P-14R, P-23, P-24, P-25R, P-26, and P-30 with P-5RR, P-14RR, P-23R, P-24R, P-25RR, P-26R, P-30R (attached).

This replacement contains the following revisions:
1.1. Schedule of Prices have been revised for the pay items and quantity revisions consistent with changes shown in the table above.
1.2. On P-30R, revised the Total amount of Contractor's Quality Program (CQP) + Contingency Work to be consistent with the changes to the Contingency Work included in Addendum No. 1.

## CHANGES TO THE CONTRACT SPECIAL PROVISIONS

**Change #2**
Contract Requirements, Volume II, Replace Page J-I Thru J-IX with J-IR Thru J-IXR, and Add J-IXA (attached).

This replacement contains the following revisions:
2.1. The table of contents have been revised consistent with the revised and new special provisions included in Addendum No. 1 and Addendum No. 2.
2.2. On page J-VR, the page number for Asphalt Binder and Surface Course Mixtures (Illinois Tollway) has been revised to read J-202.

**Change #3**
Contract Requirements, Volume II, Replace Page J-20R with J-20RR (attached).

This replacement contains the following revisions:
3.1. Revised S.P. 106.7 to indicate the Contractor shall submit to the BNSF RR the temporary occupancy permit application within 5 days of receiving Notice to Proceed.

**Change #4**
Contract Requirements, Volume II, Replace Page J-95 with J-95R (attached).

This replacement contains the following revisions:
4.1. Revised S.P. 118 "Right-of-Way", to indicate the projected acquisition date for parcel TW-5-16-134 is October 1, 2019.
4.2. Note added indicating access to parcel TW-5-16-134 is contingent upon the BNSF RR approval of the Contractor's Temporary Occupancy permit.

**Change #5**
Contract Requirements, Volume II, Replace Pages J-103A, J-103B, and J-103C with J-103AR, J-103BR, and J-103CR (attached).

This replacement contains the following revisions:
5.1. The reference to UNCONTAMINATED SOIL DISPOSAL special provision has been removed.
5.2. The basis of payment revised to be consistent with the EARTH AND ROCK EXCAVATION Special Provision requirements.
5.3. Revised the unit of measurement for SOIL DISPOSAL ANALYSIS to read EACH.

**Change #6**
Contract Requirements, Volume II, Replace Pages J-104R & J-105R with J-104RR and J-105RR (attached).

This replacement contains the following revisions:
6.1. The special provision UNCONTAMINATED SOIL DISPOSAL has been deleted.

**Change #7**
Contract Requirements, Volume II, added new Pages J-117A thru J-117C (attached).

This replacement contains the following revisions:
7.1. Added Special Provision for PILE DRIVING ANALYZER TESTING stating requirements driving the timber test piles for the ground improvement areas. This change is consistent with the revisions to the timber test pile revisions included in Addendum No. 1.

**Change #8**
Contract Requirements, Volume II, added new Pages J-117D and J-117E (attached).

This replacement contains the following revisions:
8.1. Added Special Provision for WAVE EQUATION ANALYSIS OF PILES stating requirements FOR driving the timber test piles for the ground improvement areas. This change is consistent with the revisions to the timber test pile revisions included in Addendum No. 1.

**Change #9**
Contract Requirements, Volume II, Replace Page J-129 with J-129R (attached).

This replacement contains the following revisions:
9.1. Revised the "Flow Bypassing" requirements.

**Change #10**
Contract Requirements, Volume II, Replace Page J-130 and J-131 with J-130R and J-131R (attached).

This replacement contains the following revisions:
10.1. Revised HSS sections to be ASTM A500, Grade B.
10.2. Revised the handrail requirements to be galvanized and not painted.

**Change #11**
Contract Requirements, Volume II, Replace Pages J-147R and J-151R with J-147RR and J-151RR (attached).

This replacement contains the following revisions:
11.1. The special provision has been revised indicting the fence shall be 16-feet high. The basis of payment has been revised indicating the top of panel shall be 16-ft above the proposed ground surface.
11.2. The reference to measurement and payment for Non-Special Waste Disposal has been removed. The Basis of Payment has been revised indicating Non-Special Waste will be paid for according to Special Provision EARTH AND ROCK EXCAVATION.

**Change #12**
Contract Requirements, Volume II, Replace Page J-160 with J-160R (attached).

This replacement contains the following revisions:
12.1. Added requirement to include the construction of the chlorine injection piping associated with MH101, consisting of installing a new 8" and 2" diameter PVC piping.

**Change #13**
Contract Requirements, Volume II, Replace Page J-164 with J-164R (attached).

This replacement contains the following revisions:
13.1. Added requirement to include the removal of the existing chlorine injection piping associated with manhole R103.

**Change #14**
Contract Requirements, Volume II, Replace Page J-182 with J-182R (attached).

This replacement contains the following revisions:
14.1. Added the bypass flow requirements.

**Change #15**
Contract Requirements, Volume II, Replace Page J-241 and J-242 with J-241R and J-242R (attached).

This replacement contains the following revision:
15.1. Added membrane waterproofing system and geocomposite wall drain to be included in the cost of pay item JI602791 JUNCTION CAHMBER, LOCATION 1.

**Change #16**
Contract Requirements, Volume II, added new Pages J-350A Thru J-350G (attached).

This replacement contains the following revisions:
16.1. Added Special Provision for ITS POLE MOUNTED ENCLOSURE (CCTV OR MVDS).

**Change #17**
Contract Requirements, Volume II, added new Pages J-350H Thru J-350I (attached).

This replacement contains the following revisions:
17.1. Added Special Provision for ITS DISCONNECT SWITCH ASSEMBLY.

**Change #18**
Contract Requirements, Volume II, added new Pages J-360A Thru J-360H (attached).

This replacement contains the following revisions:
18.1. Added Special Provision for FIBER OPTIC COMMUNICATIONS, ITS ASSEMBLY.

**Change #19**
Contract Requirements, Volume II, added new Pages J-360I Thru J-360L (attached).

This replacement contains the following revisions:
19.1. Added Special Provision for MAINTAIN INTELLIGENT TRANSPORTATION SYSTEMS.

**Change #20**
Contract Requirements, Volume II, added new Pages J-360M Thru J-360Y (attached).

This replacement contains the following revisions:
20.1. Added Special Provision for ITS ELEMENT SITE GROUNDING-POLE MOUNTED ASSEMBLY.

**Change #21**
Contract Requirements, Volume II, Replace Page J-411, J-413, J-416, J-417, J-424 with J—411R, J-413R, J-416R, J-417R, J-424R (attached).

This replacement contains the following revisions:
21.1. The Noise Abatement Wall "General Structural Design Requirement 6" has been revised to clarify post alignment requirements.
21.2. The Noise Abatement Wall "Ground Mounted Design Requirement 1" has been revised to clarify panel/post vertical alignment requirements.
21.3. The Noise Abatement Wall "Structural Steel Materials" has been revised to add paint color requirements for steel posts.
21.4. The Noise Abatement Wall "Structural Steel Fabrication, Construction and Erection Requirements" has been revised to add paint color requirements for steel posts.

**Change #22**
Contract Requirements, Volume II, Replace Page J-445 with J-445R (attached).

This replacement contains the following revisions:
22.1. The Basis of Payment table has been revised to include pay item JT810873 for 1.25" dia. conduit.

**Change #23**
Contract Requirements, Volume II, added new Pages J-445A and J-445B (attached).

This replacement contains the following revisions:
23.1. Added Special Provision for CONCRETE SERVICE PAD.

**Change #24**
Contract Requirements, Volume II, added new Page J-450A (attached).

This replacement contains the following revisions:
24.1. Added Special Provision for LOCATE TRACER WIRE.

## CHANGES TO THE CONTRACT PLANS

**Change #25**
Contract Plans, Volume 1, Drawings 5 and 6 (attached)

This change contains the following revisions:
25.1. Revised schedule to be consistent with revisions included in S.P. 118.

**Change #26**
Contract Plans, Volume 1, Drawing 9, 10, 12, 13

This change contains the following revisions:
26.1. The summary of quantities has been revised to be consistent with Summary of Revisions to Pay Item Quantities table above.
Revised drawings to be issued to successful Bidder.

**Change #27**
Contract Plans, Volume 1, Drawing 14

This change contains the following revisions:
27.1. The earthwork schedule of quantities has been revised to be consistent with conditions 1, 2, and 3 noted in the Special Provision EARTH AND ROCK EXCAVATION.
Revised drawing to be issued to successful Bidder.

**Change #28**
Contract Plans, Volume 1, Drawing 14A (attached)

This change contains the following revisions:
28.1. A plan view showing approximate locations of Conditions 1, 2, and 3 as noted in the Special Provision EARTH AND ROCK EXCAVATION has been provided.

**Change #29**
Contract Plans, Volume 1, Drawings 50, 53, 56, 59, 62, 65

This change contains the following revisions:
29.1. A note has been added indicating approximate locations of the temporary access ramps consistent with the temporary grading plans. No change to MOT details included with this revision.
Revised drawing to be issued to successful Bidder.

**Change #30**
Contract Plans, Volume 1, Drawing 130 (attached)

This change contains the following revisions:
30.1. Added the removal of the chlorine injection piping associated with R103.

**Change #31**
Contract Plans, Volume 1, Drawing 134 (attached)

This change contains the following revisions:
31.1. Changed the Standard Number for MH101 and MH201.

**Change #32**
Contract Plans, Volume 1, Drawing 137

This change contains the following revisions:
32.1. Revise note 1 to read "Excess soil excavated for pipe installation shall be disposed of according to Special Provision EARTH AND ROCK EXCAVATION."
32.2. Revise note 2 to read "Structure Excavation is not measured for payment for this work, but shall be included in the cost of STORM SEWERS JACKED IN PLACE, 48".
Revised drawing to be issued to successful Bidder.

**Change #33**
Contract Plans, Volume 1, Drawing 138 (attached)

This change contains the following revisions:
33.1. Added the construction of the chlorine injection piping associated with MH101 and the detail associated with the chlorine injection piping.

**Change #34**
Contract Plans, Volume 1, Drawing 163 (attached)

This change contains the following revisions:
34.1. Added MEMBRANE WATERPROOFING FOR BURIED STRUCTURES and GEOCOMPOSITE WALL DRAIN quantities to Bill of Material and indicated items are to be included in the cost of JUNCTION CHAMBER, LOCATION 1.

**Change #35**
Contract Plans, Volume 1, Drawing 235 (attached)

This change contains the following revisions:
35.1. Additional pay items for conduit and electrical cable associated with the CCTV have been revised. In addition, the Contractor shall delay installation of the CCTV until the I-18-4438 Contractor installs the pole line from approximately station 1417+00 to 1427+50, where the existing controller will provide service for the CCTV camera.
35.2. Aerial electrical cable is noted.
35.3. Additional reference to ITS sheets noted to clarify limits and scope of work to be included in this contract. Note ITS drawings 240A thru 240C have been provided to show limits of work.

**Change #36**
Contract Plans, Volume 1, Drawings 240A thru 240E (attached)

This change contains the following revisions:
36.1. The ITS and CCTV work overlaps with the I-18-4438 Contract. Plan views have been provided to clarity limits and scope of work to be included in this contract, and which work needs coordination with I-18-4438 Contractor.
36.2. Drawing 240D and 240E provides bored conduit details.

**Change #37**
Contract Plans, Volume 2, Drawings 266 and 268

This change contains the following revisions:
37.1. On drawing 266, the dimensions have been revised due to row 20 being deleted due to the 48" dia pipe being jacked under the railroad embankment. Dimension of 6-ft added between rows 17-18, and 18-19. A 12-ft dimension added between rows 19-21. The callout for pile rows 21-150 has been revised to read "129 pile spaces at 6'-0" = 744'-0"".
37.2. On drawing 268, Table "Location (Pile Row A to K), Piles Embankment at Stations 102+00.44 to 109+98.44",
    37.2.1. Revise No. of piles for ROW A, B, C, and D to read 133, 132, 133, and 133 respectively. (1 pile less than shown for each).
    37.2.2. For Row E-F, revise No of Piles to read 266.
    37.2.3. For Rows G-K, revise number of piles to read 665.
37.3. On drawing 268, Table 1, Station 102+00.44 through Station 109+98.44, the pile lengths for Rows G-K have been reduced by 1'-0".
Revised drawing to be issued to successful Bidder.

**Change #38**
Contract Plans, Volume 2, Drawing 274 (attached)

This change contains the following revisions:
38.1. In each "Plan View", Dimensions showing sheet piling layout have been added/revised.

**Change #39**
Contract Plans, Volume 2, Drawing 305

This change contains the following revisions:
39.1. In "Section C-C", a dimension has been added between the gap in the deck plates over the pier which reads 2 7/8".
Revised drawing to be issued to successful Bidder.

**Change #40**
Contract Plans, Volume 2, Drawing 307 (attached)

This change contains the following revisions:
40.1. Handrail splice details have been included.

**Change #41**
Contract Plans, Volume 2, Drawing 308 (attached)

This change contains the following revisions:
41.1. Note has been added indicating the work associated with the sacrificial beam is included in the cost of FURNISHING AND ERECTING STRUCTURAL STEEL.

**Change #42**
Contract Plans, Volume 2, Drawing 318

This change contains the following revisions:
42.1. Under the "Structural Steel" heading, General Note has been added indicating "COVER PLATE, CLOSURE PLATES AND ANCHOR RODS/BOLTS SHALL BE GALVANIZED AFTER FABRICATION IN ACCORDANCE WITH ASTM A123, THICKNESS GRADE 100."
Revised drawing to be issued to successful Bidder.

**Change #43**
Contract Plans, Volume 2, Drawings 323, 324, 326, and 327 (attached)

This change contains the following revisions:
43.1. A callout or note has been added stating the cost of the waler is included in the cost of TIE RODS.

**Change #44**
Contract Plans, Volume 2, Drawing 325

This change contains the following revisions:
44.1. The description for pay item X0800003 has been revised to read "COURSE AGGREGATE BACKFILL SPECIAL."
44.2. The description for pay item Z0075400 has been revised to read "TIE RODS."
Revised drawing to be issued to successful Bidder.

**Change #45**
Contract Plans, Volume 2, Drawing 329 (attached)

This change contains the following revisions:
45.1. A note has been added stating the cost of the C10X20 bracing is included in the cost of FURNISHING STEEL PILES, HP14X89.

**Change #46**
Contract Plans, Volume 2, Drawings 343 and 344 (attached)

This change contains the following revisions:
46.1. Note has been added stating "ALL ELEMENTS OF SACRIFICIAL BEAM AND SUPPORTING FRAME SHALL BE INCLUDED IN THE COST OF FURNISHING AND ERECTING STRUCTURAL STEEL."

**Change #47**
Contract Plans, Volume 2, Drawings 347, 351, 355, 360, and 382 (attached)

This change contains the following revisions:
47.1. The Design Specifications have been revised.

**Change #48**
Contract Plans, Volume 2, Drawing 356

This change contains the following revisions:
48.1. In the "Section Thru Wall" detail, the dimensions showing the Load Transfer Platform and ground improvement caps, showing 2'-0" and 1'-0" have been deleted.
Revised drawing to be issued to successful Bidder.

**Change #49**
Contract Plans, Volume 2, Drawing 376

This change contains the following revisions:
49.1. Wall thickness and reinforcement clearance increased to match the relief of the form liner requirements.
Revised drawing to be issued to successful Bidder.

**Change #50**
Contract Plans, Volume 2, Drawing 383 (attached)

This change contains the following revisions:
50.1. Notes have been added clarifying limits of Earth Excavation and Structure Excavation.

## CHANGES TO THE COMPUTER-AIDED DESIGN (CAD) FILES

**Change #51**
Computer-Aided Design (CAD) Files (provided in Tollway's Online Plan Room)

This change contains the following revisions:
51.1. Available Computer-Aided Design (CAD) Files provided in an additional (.dxf) format. These files will be uploaded to the Online Plan Room as part of this Addendum to be consistent with the revised Special Provision 121 included as part of Addendum No. 1.

---

**END OF ADDENDUM CHANGES**

THE ILLINOIS STATE TOLL HIGHWAY AUTHORITY (TOLLWAY)

CONTRACT NO. I-18-4428

BRIDGE RECONSTRUCTION (BN 261) BURLINGTON NORTHERN SANTA FE (BNSF) RAILWAY OVER

THE TRI-STATE TOLLWAY (I-294)

MILE POST 26.6

SCHEDULE OF PRICES

| SP | PAY ITEM NUMBER | DESIGNATION | UNIT | QUANTITY | UNIT PRICE DOLLAR | AMOUNT DOLLAR |
|---|---|---|---|---|---|---|
| * | 20100500 | TREE REMOVAL, ACRES | ACRE | 12.0 | | |
| | 20101100 | TREE TRUNK PROTECTION | EACH | 10 | | |
| * | 20200100 | EARTH EXCAVATION | CU YD | 109,456 | | |
| * | 20201200 | REMOVAL AND DISPOSAL OF UNSUITABLE MATERIAL | CU YD | 18,360 | | |
| | 20400100 | BORROW EXCAVATION | CU YD | 45,350 | | |
| | 20400800 | FURNISHED EXCAVATION | CU YD | 75,772 | | |
| | 20800150 | TRENCH BACKFILL | CU YD | 5,210 | | |
| | 20900110 | POROUS GRANULAR BACKFILL | CU YD | 5,018 | | |
| | 25000400 | NITROGEN FERTILIZER NUTRIENT | POUND | 475 | | |
| | 25000500 | PHOSPHORUS FERTILIZER NUTRIENT | POUND | 62 | | |
| | 25000600 | POTASSIUM FERTILIZER NUTRIENT | POUND | 1,162 | | |
| | 25100127 | MULCH, METHOD 3A | ACRE | 25.3 | | |
| | 25100630 | EROSION CONTROL BLANKET | SQ YD | 72,154 | | |
| | 25200100 | SODDING | SQ YD | 16,686 | | |
| | 25200110 | SODDING, SALT TOLERANT | SQ YD | 2,192 | | |
| | 25200200 | SUPPLEMENTAL WATERING | UNIT | 349 | | |
| | 28000250 | TEMPORARY EROSION CONTROL SEEDING | POUND | 2,520 | | |

## THE ILLINOIS STATE TOLL HIGHWAY AUTHORITY (TOLLWAY)

### CONTRACT NO. I-18-4428

### BRIDGE RECONSTRUCTION (BN 261) BURLINGTON NORTHERN SANTA FE (BNSF) RAILWAY OVER THE TRI-STATE TOLLWAY (I-294)

### MILE POST 26.6

### SCHEDULE OF PRICES

| SP | PAY ITEM NUMBER | DESIGNATION | UNIT | QUANTITY | UNIT PRICE DOLLAR | AMOUNT DOLLAR |
|---|---|---|---|---|---|---|
| | 28100107 | STONE RIPRAP, CLASS A4 | SQ YD | 40 | | |
| | 28200200 | FILTER FABRIC | SQ YD | 708 | | |
| | 31100200 | SUBBASE GRANULAR MATERIAL, TYPE A | CU YD | 27 | | |
| | 31100500 | SUBBASE GRANULAR MATERIAL, TYPE A 6" | SQ YD | 1,866 | | |
| | 31101200 | SUBBASE GRANULAR MATERIAL, TYPE B 4" | SQ YD | 980 | | |
| | 31102000 | SUBBASE GRANULAR MATERIAL, TYPE C | CU YD | 12 | | |
| | 35102400 | AGGREGATE BASE COURSE, TYPE B 12" | SQ YD | 3,110 | | |
| | 40200700 | AGGREGATE SURFACE COURSE, TYPE A 8" | SQ YD | 1,441 | | |
| | 40201000 | AGGREGATE FOR TEMPORARY ACCESS | TON | 840 | | |
| | 40600275 | BITUMINOUS MATERIALS (PRIME COAT) | POUND | 6,998 | | |
| | 40600290 | BITUMINOUS MATERIALS (TACK COAT) | POUND | 1,875 | | |
| | 40600982 | HOT-MIX ASPHALT SURFACE REMOVAL - BUTT JOINT | SQ YD | 24 | | |
| | 40603085 | HOT-MIX ASPHALT BINDER COURSE, IL-19.0, N70 | TON | 348 | | |
| | 40603340 | HOT-MIX ASPHALT SURFACE COURSE, MIX "D", N70 | TON | 641 | | |
| | 42000060 | WELDED WIRE REINFORCEMENT | SQ YD | 24 | | |
| | 42000501 | PORTLAND CEMENT CONCRETE PAVEMENT 10" (JOINTED) | SQ YD | 203 | | |
| | 42001300 | PROTECTIVE COAT | SQ YD | 1,652 | | |

## THE ILLINOIS STATE TOLL HIGHWAY AUTHORITY (TOLLWAY)

CONTRACT NO. I-18-4428

BRIDGE RECONSTRUCTION (BN 261) BURLINGTON NORTHERN SANTA FE (BNSF) RAILWAY OVER

THE TRI-STATE TOLLWAY (I-294)

MILE POST 26.6

SCHEDULE OF PRICES

| SP | PAY ITEM NUMBER | DESIGNATION | UNIT | QUANTITY | UNIT PRICE DOLLAR | AMOUNT DOLLAR |
|---|---|---|---|---|---|---|
| | 42400200 | PORTLAND CEMENT CONCRETE SIDEWALK 5 INCH | SQ FT | 8,824 | | |
| | 42400800 | DETECTABLE WARNINGS | SQ FT | 50 | | |
| | 44000100 | PAVEMENT REMOVAL | SQ YD | 4,527 | | |
| | 44000157 | HOT-MIX ASPHALT SURFACE REMOVAL, 2" | SQ YD | 11,652 | | |
| | 44000400 | GUTTER REMOVAL | FOOT | 501 | | |
| | 44000500 | COMBINATION CURB AND GUTTER REMOVAL | FOOT | 2,152 | | |
| | 44000600 | SIDEWALK REMOVAL | SQ FT | 4,950 | | |
| | 44001980 | CONCRETE BARRIER REMOVAL | FOOT | 395 | | |
| | 44004000 | PAVED DITCH REMOVAL | FOOT | 1,196 | | |
| | 44004250 | PAVED SHOULDER REMOVAL | SQ YD | 8,123 | | |
| | 44201747 | CLASS D PATCHES, TYPE IV, 8 INCH | SQ YD | 1,866 | | |
| * | 50100300 | REMOVAL OF EXISTING STRUCTURES NO. 1 | EACH | 1 | | |
| * | 50100400 | REMOVAL OF EXISTING STRUCTURES NO. 2 | EACH | 1 | | |
| | 50104400 | CONCRETE HEADWALL REMOVAL | EACH | 10 | | |
| | 50157300 | PROTECTIVE SHIELD | SQ YD | 1,980 | | |
| | 50200100 | STRUCTURE EXCAVATION | CU YD | 14,485 | | |
| * | 50201101 | COFFERDAM (TYPE 1) (LOCATION - 1) | EACH | 1 | | |

## THE ILLINOIS STATE TOLL HIGHWAY AUTHORITY (TOLLWAY)

**CONTRACT NO. I-18-4428**

**BRIDGE RECONSTRUCTION (BN 261) BURLINGTON NORTHERN SANTA FE (BNSF) RAILWAY OVER**

**THE TRI-STATE TOLLWAY (I-294)**

**MILE POST 26.6**

**SCHEDULE OF PRICES**

| SP | PAY ITEM NUMBER | DESIGNATION | UNIT | QUANTITY | UNIT PRICE DOLLAR | AMOUNT DOLLAR |
|---|---|---|---|---|---|---|
| | 50300225 | CONCRETE STRUCTURES | CU YD | 651.9 | | |
| | 50401205 | PRECAST CONCRETE CAPS | EACH | 1,929 | | |
| * | 50500105 | FURNISHING AND ERECTING STRUCTURAL STEEL | L. SUM | 1 | | |
| | 50500505 | STUD SHEAR CONNECTORS | EACH | 1,985 | | |
| | 50800105 | REINFORCEMENT BARS | POUND | 490,410 | | |
| | 50800205 | REINFORCEMENT BARS, EPOXY COATED | POUND | 328,372 | | |
| | 50800515 | BAR SPLICERS | EACH | 193 | | |
| | 50901760 | PIPE HANDRAIL | FOOT | 248 | | |
| | 51200205 | FURNISHING UNTREATED PILES 30.1-45 FEET | FOOT | 65,238 | | |
| | 51200305 | FURNISHING UNTREATED PILES OVER 45 FEET | FOOT | 689 | | |
| | 51201900 | FURNISHING STEEL PILES HP14X89 | FOOT | 6,104 | | |
| | 51202305 | DRIVING PILES | FOOT | 72,031 | | |
| | 51202900 | TEST PILE TIMBER | EACH | 12 | | |
| | 51203900 | TEST PILE STEEL HP14X89 | EACH | 5 | | |
| | 51204650 | PILE SHOES | EACH | 108 | | |
| GBSP | 51602000 | PERMANENT CASING | FOOT | 1,941 | | |
| GBSP | 51603000 | DRILLED SHAFT IN SOIL | CU YD | 1,291 | | |

## THE ILLINOIS STATE TOLL HIGHWAY AUTHORITY (TOLLWAY)

**CONTRACT NO. I-18-4428**

**BRIDGE RECONSTRUCTION (BN 261) BURLINGTON NORTHERN SANTA FE (BNSF) RAILWAY OVER**

**THE TRI-STATE TOLLWAY (I-294)**

**MILE POST 26.6**

**SCHEDULE OF PRICES**

| SP | PAY ITEM NUMBER | DESIGNATION | UNIT | QUANTITY | UNIT PRICE DOLLAR | AMOUNT DOLLAR |
|---|---|---|---|---|---|---|
| | 52100400 | STEEL BEARING ASSEMBLY | EACH | 16 | | |
| | 52200010 | TEMPORARY SHEET PILING | SQ FT | 4,027 | | |
| | 52200020 | TEMPORARY SOIL RETENTION SYSTEM | SQ FT | 13,726 | | |
| | 52200100 | FURNISHING SOLDIER PILES (HP SECTION) | FOOT | 951 | | |
| | 52200105 | FURNISHING SOLDIER PILES (W SECTION) | FOOT | 4,317 | | |
| | 52200200 | DRILLING AND SETTING SOLDIER PILES (IN SOIL) | CU FT | 35,675 | | |
| | 52200250 | UNTREATED TIMBER LAGGING | SQ FT | 8,547 | | |
| | 52200700 | PRECAST MODULAR RETAINING WALL | SQ FT | 20,719 | | |
| | 52200800 | SEGMENTAL CONCRETE BLOCK WALL | SQ FT | 3,912 | | |
| | 52200900 | CONCRETE STRUCTURES (RETAINING WALL) | CU YD | 602.7 | | |
| | 54001001 | BOX CULVERT END SECTIONS, CULVERT NO. 1 | EACH | 1 | | |
| | 54001003 | BOX CULVERT END SECTIONS, CULVERT NO. 3 | EACH | 1 | | |
| | 54001004 | BOX CULVERT END SECTIONS, CULVERT NO. 4 | EACH | 1 | | |
| | 54003000 | CONCRETE BOX CULVERTS | CU YD | 841.8 | | |
| | 54010605 | PRECAST CONCRETE BOX CULVERTS 6'X5' | FOOT | 562 | | |
| | 54248510 | CONCRETE COLLAR | CU YD | 6.4 | | |
| | 550A0070 | STORM SEWERS, CLASS A, TYPE 1 15" | FOOT | 152 | | |

THE ILLINOIS STATE TOLL HIGHWAY AUTHORITY (TOLLWAY)

CONTRACT NO. I-18-4428

BRIDGE RECONSTRUCTION (BN 261) BURLINGTON NORTHERN SANTA FE (BNSF) RAILWAY OVER

THE TRI-STATE TOLLWAY (I-294)

MILE POST 26.6

SCHEDULE OF PRICES

| SP | PAY ITEM NUMBER | DESIGNATION | UNIT | QUANTITY | UNIT PRICE DOLLAR | AMOUNT DOLLAR |
|---|---|---|---|---|---|---|
| | 550A0120 | STORM SEWERS, CLASS A, TYPE 1 24" | FOOT | 58 | | |
| | 550A0190 | STORM SEWERS, CLASS A, TYPE 1 48" | FOOT | 55 | | |
| | 550A0340 | STORM SEWERS, CLASS A, TYPE 2 12" | FOOT | 88 | | |
| | 550A0360 | STORM SEWERS, CLASS A, TYPE 2 15" | FOOT | 1,927 | | |
| | 550A0380 | STORM SEWERS, CLASS A, TYPE 2 18" | FOOT | 235 | | |
| | 550A0410 | STORM SEWERS, CLASS A, TYPE 2 24" | FOOT | 202 | | |
| | 550A0430 | STORM SEWERS, CLASS A, TYPE 2 30" | FOOT | 1,033 | | |
| | 550A0470 | STORM SEWERS, CLASS A, TYPE 2 42" | FOOT | 1,920 | | |
| | 550A0480 | STORM SEWERS, CLASS A, TYPE 2 48" | FOOT | 392 | | |
| | 550A5500 | STORM SEWERS, CLASS A, TYPE 2 EQUIVALENT ROUND-SIZE 42" | FOOT | 9 | | |
| | 55100200 | STORM SEWER REMOVAL 6" | FOOT | 41 | | |
| | 55100400 | STORM SEWER REMOVAL 10" | FOOT | 162 | | |
| | 55100500 | STORM SEWER REMOVAL 12" | FOOT | 97 | | |
| | 55100700 | STORM SEWER REMOVAL 15" | FOOT | 1,074 | | |
| | 55100900 | STORM SEWER REMOVAL 18" | FOOT | 44 | | |
| | 55101200 | STORM SEWER REMOVAL 24" | FOOT | 1,175 | | |
| | 55101600 | STORM SEWER REMOVAL 36" | FOOT | 103 | | |

## THE ILLINOIS STATE TOLL HIGHWAY AUTHORITY (TOLLWAY)

CONTRACT NO. I-18-4428

BRIDGE RECONSTRUCTION (BN 261) BURLINGTON NORTHERN SANTA FE (BNSF) RAILWAY OVER

THE TRI-STATE TOLLWAY (I-294)

MILE POST 26.6

SCHEDULE OF PRICES

| SP | PAY ITEM NUMBER | DESIGNATION | UNIT | QUANTITY | UNIT PRICE DOLLAR | AMOUNT DOLLAR |
|---|---|---|---|---|---|---|
| | 55101800 | STORM SEWER REMOVAL 42" | FOOT | 526 | | |
| | 55101900 | STORM SEWER REMOVAL 48" | FOOT | 8 | | |
| | 56100900 | WATER MAIN 12" | FOOT | 1,818 | | |
| | 58700300 | CONCRETE SEALER | SQ FT | 11,810 | | |
| | 59100100 | GEOCOMPOSITE WALL DRAIN | SQ YD | 3,613 | | |
| | 60200105 | CATCH BASINS, TYPE A, 4'-DIAMETER, TYPE 1 FRAME, OPEN LID | EACH | 10 | | |
| | 60200305 | CATCH BASINS, TYPE A, 4'-DIAMETER, TYPE 3 FRAME AND GRATE | EACH | 8 | | |
| | 60200805 | CATCH BASINS, TYPE A, 4'-DIAMETER, TYPE 8 GRATE | EACH | 4 | | |
| | 60203805 | CATCH BASINS, TYPE A, 5'-DIAMETER, TYPE 1 FRAME, OPEN LID | EACH | 2 | | |
| | 60206905 | CATCH BASINS, TYPE C, TYPE 1 FRAME, OPEN LID | EACH | 2 | | |
| | 60218400 | MANHOLES, TYPE A, 4'-DIAMETER, TYPE 1 FRAME, CLOSED LID | EACH | 4 | | |
| | 60221100 | MANHOLES, TYPE A, 5'-DIAMETER, TYPE 1 FRAME, CLOSED LID | EACH | 2 | | |
| | 60223700 | MANHOLES, TYPE A, 6'-DIAMETER, TYPE 1 FRAME, OPEN LID | EACH | 4 | | |
| | 60223800 | MANHOLES, TYPE A, 6'-DIAMETER, TYPE 1 FRAME, CLOSED LID | EACH | 5 | | |
| | 60224446 | MANHOLES, TYPE A, 7'-DIAMETER, TYPE 1 FRAME, CLOSED LID | EACH | 4 | | |
| | 60224459 | MANHOLES, TYPE A, 8'-DIAMETER, TYPE 1 FRAME, CLOSED LID | EACH | 4 | | |
| | 60224469 | MANHOLES, TYPE A, 9'-DIAMETER, TYPE 1 FRAME, CLOSED LID | EACH | 5 | | |

## THE ILLINOIS STATE TOLL HIGHWAY AUTHORITY (TOLLWAY)

### CONTRACT NO. I-18-4428

### BRIDGE RECONSTRUCTION (BN 261) BURLINGTON NORTHERN SANTA FE (BNSF) RAILWAY OVER THE TRI-STATE TOLLWAY (I-294)

### MILE POST 26.6

### SCHEDULE OF PRICES

| SP | PAY ITEM NUMBER | DESIGNATION | UNIT | QUANTITY | UNIT PRICE DOLLAR | AMOUNT DOLLAR |
|---|---|---|---|---|---|---|
| | 60248900 | VALVE VAULTS, TYPE A, 5'-DIAMETER, TYPE 1 FRAME, CLOSED LID | EACH | 2 | | |
| | 60250200 | CATCH BASINS TO BE ADJUSTED | EACH | 1 | | |
| | 60253100 | CATCH BASINS TO BE RECONSTRUCTED WITH NEW TYPE 1 FRAME, CLOSED LID | EACH | 2 | | |
| | 60255800 | MANHOLES TO BE ADJUSTED WITH NEW TYPE 1 FRAME, CLOSED LID | EACH | 1 | | |
| | 60258100 | MANHOLES TO BE RECONSTRUCTED WITH NEW TYPE 1 FRAME, OPEN LID | EACH | 1 | | |
| | 60258200 | MANHOLES TO BE RECONSTRUCTED WITH NEW TYPE 1 FRAME, CLOSED LID | EACH | 2 | | |
| | 60300305 | FRAMES AND LIDS TO BE ADJUSTED | EACH | 3 | | |
| | 60406000 | FRAMES AND LIDS, TYPE 1, OPEN LID | EACH | 3 | | |
| | 60500040 | REMOVING MANHOLES | EACH | 17 | | |
| | 60500050 | REMOVING CATCH BASINS | EACH | 22 | | |
| | 60500060 | REMOVING INLETS | EACH | 1 | | |
| | 60500105 | FILLING MANHOLES | EACH | 1 | | |
| | 60600095 | CLASS SI CONCRETE (OUTLET) | CU YD | 8.0 | | |
| | 60603800 | COMBINATION CONCRETE CURB AND GUTTER, TYPE B-6.12 | FOOT | 2,900 | | |
| | 63200310 | GUARDRAIL REMOVAL | FOOT | 902 | | |
| * | 66900200 | NON-SPECIAL WASTE DISPOSAL | CU YD | 0 | | |
| | 66900205 | SPECIAL WASTE DISPOSAL | CU YD | 0 | | |

## THE ILLINOIS STATE TOLL HIGHWAY AUTHORITY (TOLLWAY)

CONTRACT NO. I-18-4428

BRIDGE RECONSTRUCTION (BN 261) BURLINGTON NORTHERN SANTA FE (BNSF) RAILWAY OVER

THE TRI-STATE TOLLWAY (I-294)

MILE POST 26.6

SCHEDULE OF PRICES

| SP | PAY ITEM NUMBER | DESIGNATION | UNIT | QUANTITY | UNIT PRICE DOLLAR | AMOUNT DOLLAR |
|---|---|---|---|---|---|---|
| | 66900530 | SOIL DISPOSAL ANALYSIS | EACH | 200 | | |
| BDE | 70300904 | PAVEMENT MARKING TAPE, TYPE IV 4" | FOOT | 94,077 | | |
| | 70600280 | IMPACT ATTENUATORS, TEMPORARY (SEVERE USE,NARROW), TEST LEVEL 3 | EACH | 8 | | |
| | 70600370 | IMPACT ATTENUATORS, RELOCATE (SEVERE USE, NARROW), TEST LEVEL 3 | EACH | 82 | | |
| | 72100100 | SIGN PANEL OVERLAY | SQ FT | 22 | | |
| | 72400200 | REMOVE SIGN PANEL ASSEMBLY - TYPE B | EACH | 1 | | |
| | 72400330 | REMOVE SIGN PANEL - TYPE 3 | SQ FT | 96 | | |
| | 72400720 | RELOCATE SIGN PANEL - TYPE 2 | SQ FT | 20 | | |
| | 72400730 | RELOCATE SIGN PANEL - TYPE 3 | SQ FT | 96 | | |
| | 72700100 | STRUCTURAL STEEL SIGN SUPPORT - BREAKAWAY | POUND | 912 | | |
| | 73000100 | WOOD SIGN SUPPORT | FOOT | 18 | | |
| | 73400100 | CONCRETE FOUNDATIONS | CU YD | 2.4 | | |
| | 73700100 | REMOVE GROUND MOUNTED SIGN SUPPORT | EACH | 2 | | |
| | 73700200 | REMOVE CONCRETE FOUNDATION - GROUND MOUNT | EACH | 2 | | |
| | 78000100 | THERMOPLASTIC PAVEMENT MARKING - LETTERS AND SYMBOLS | SQ FT | 7.0 | | |
| | 78000200 | THERMOPLASTIC PAVEMENT MARKING - LINE 4" | FOOT | 2,090 | | |
| | 78000600 | THERMOPLASTIC PAVEMENT MARKING - LINE 12" | FOOT | 66 | | |

## THE ILLINOIS STATE TOLL HIGHWAY AUTHORITY (TOLLWAY)

### CONTRACT NO. I-18-4428

### BRIDGE RECONSTRUCTION (BN 261) BURLINGTON NORTHERN SANTA FE (BNSF) RAILWAY OVER THE TRI-STATE TOLLWAY (I-294)

### MILE POST 26.6

### SCHEDULE OF PRICES

| SP | PAY ITEM NUMBER | DESIGNATION | UNIT | QUANTITY | UNIT PRICE DOLLAR | AMOUNT DOLLAR |
|---|---|---|---|---|---|---|
| | 78005110 | EPOXY PAVEMENT MARKING - LINE 4" | FOOT | 12,544 | | |
| | 78005130 | EPOXY PAVEMENT MARKING - LINE 6" | FOOT | 9,408 | | |
| | 78005150 | EPOXY PAVEMENT MARKING - LINE 12" | FOOT | 1,111 | | |
| | 81028180 | UNDERGROUND CONDUIT, GALVANIZED STEEL, 1 1/4" DIA. | FOOT | 6 | | |
| | 81028210 | UNDERGROUND CONDUIT, GALVANIZED STEEL, 2 1/2" DIA. | FOOT | 138 | | |
| | 81028730 | UNDERGROUND CONDUIT, COILABLE NONMETALLIC CONDUIT, 1 1/4" DIA. | FOOT | 729 | | |
| | 81702110 | ELECTRIC CABLE IN CONDUIT, 600V (XLP-TYPE USE) 1/C NO. 10 | FOOT | 549 | | |
| | 81702130 | ELECTRIC CABLE IN CONDUIT, 600V (XLP-TYPE USE) 1/C NO. 6 | FOOT | 1,617 | | |
| | 81800330 | AERIAL CABLE, 3-1/C NO. 6 WITH MESSENGER WIRE | FOOT | 1,600 | | |
| | 81800400 | AERIAL CABLE, 4-1/C NO. 2 WITH MESSENGER WIRE | FOOT | 2,648 | | |
| | 83600200 | LIGHT POLE FOUNDATION, 24" DIAMETER | FOOT | 53 | | |
| | 84200600 | REMOVAL OF LIGHTING UNIT, NO SALVAGE | EACH | 4 | | |
| | 84200804 | REMOVAL OF POLE FOUNDATION | EACH | 4 | | |
| | 87900100 | DRILL EXISTING FOUNDATION | EACH | 2 | | |
| * | X0300015 | CONCRETE WINGWALL REMOVAL | EACH | 4 | | |
| GBSP | X0320051 | CROSSHOLE SONIC LOGGING ACCESS DUCTS | FOOT | 9,070 | | |
| GBSP | X0320052 | CROSSHOLE SONIC LOGGING TESTING | EACH | 3 | | |
| * | X0322584 | REVETMENT MAT REMOVAL | SQ YD | 333 | | |

## THE ILLINOIS STATE TOLL HIGHWAY AUTHORITY (TOLLWAY)

### CONTRACT NO. I-18-4428

### BRIDGE RECONSTRUCTION (BN 261) BURLINGTON NORTHERN SANTA FE (BNSF) RAILWAY OVER

### THE TRI-STATE TOLLWAY (I-294)

### MILE POST 26.6

### SCHEDULE OF PRICES

| SP | PAY ITEM NUMBER | DESIGNATION | UNIT | QUANTITY | UNIT PRICE DOLLAR | AMOUNT DOLLAR |
|---|---|---|---|---|---|---|
| * | X0322916 | PROPOSED STORM SEWER CONNECTION TO EXISTING STORM SEWER | EACH | 1 | | |
| * | X0322917 | PROPOSED STORM SEWER CONNECTION TO EXISTING MANHOLE | EACH | 3 | | |
| * | X0322924 | RETAINING WALL REMOVAL | SQ FT | 589 | | |
| * | X0324761 | DRAINAGE SYSTEM (SPECIAL) | L SUM | 1 | | |
| * | X0325110 | BIAXIAL GEOGRID | SQ YD | 18,724 | | |
| * | X0325815 | REMOVE EXISTING CABLE | FOOT | 364 | | |
| * | X0326801 | COMBINED SEWERS TO BE CLEANED | FOOT | 1,275 | | |
| * | X0326804 | COMBINED SEWER REMOVAL 42" | FOOT | 607 | | |
| * | X0326998 | FURNISH AND INSTALL HANDRAIL | FOOT | 1,270 | | |
| * | X0327141 | LIGHTING STANDARD, TYPE 4A | EACH | 2 | | |
| * | X0327142 | LIGHTING STANDARD, TYPE 4B | EACH | 2 | | |
| * | X0327149 | RELOCATE BENCH | EACH | 1 | | |
| * | X0327267 | SLOPE INCLINOMETER | EACH | 2 | | |
| * | X0327357 | CONSTRUCTION VIBRATION MONITORING | L SUM | 1 | | |
| * | X0327754 | TEMPORARY BULKHEAD | EACH | 6 | | |
| * | X0795800 | COARSE AGGREGATE | TON | 12,837 | | |
| * | X0800003 | COARSE AGGREGATE BACKFILL (SPECIAL) | CU YD | 2,110 | | |

## THE ILLINOIS STATE TOLL HIGHWAY AUTHORITY (TOLLWAY)

### CONTRACT NO. I-18-4428

### BRIDGE RECONSTRUCTION (BN 261) BURLINGTON NORTHERN SANTA FE (BNSF) RAILWAY OVER THE TRI-STATE TOLLWAY (I-294)

### MILE POST 26.6

### SCHEDULE OF PRICES

| SP | PAY ITEM NUMBER | DESIGNATION | UNIT | QUANTITY | UNIT PRICE DOLLAR | AMOUNT DOLLAR |
|---|---|---|---|---|---|---|
| GBSP | X0900064 | MEMBRANE WATERPROOFING SYSTEM FOR BURIED STRUCTURES | SQ YD | 2,542 | | |
| * | X1200080 | STORM SEWERS JACKED IN PLACE, 48" (SPECIAL) | FOOT | 296 | | |
| * | X1200140 | PRECAST CONCRETE BOX CULVERT (SPECIAL) | FOOT | 1,043 | | |
| * | X2200003 | FENCE (SPECIAL) | FOOT | 1,930 | | |
| * | X5030225 | CONCRETE STRUCTURES (SPECIAL) | CU YD | 36 | | |
| * | X5210015 | ELASTOMERIC BEARING ASSEMBLY, TYPE I (SPECIAL) | EACH | 64 | | |
| * | X5210025 | ELASTOMERIC BEARING ASSEMBLY, TYPE II (SPECIAL) | EACH | 16 | | |
| * | X5537500 | STORM SEWERS TO BE CLEANED 6" | FOOT | 167 | | |
| * | X5538000 | STORM SEWERS TO BE CLEANED 18" | FOOT | 63 | | |
| * | X5538400 | STORM SEWERS TO BE CLEANED 30" | FOOT | 272 | | |
| * | X5610651 | ABANDON EXISTING WATER MAIN, FILL WITH CLSM | FOOT | 1,793 | | |
| * | X6020293 | MANHOLES, TYPE A, 8'-DIAMETER, WITH 2 TYPE 1 FRAME, CLOSED LID, RESTRICTOR PLATE | EACH | 1 | | |
| * | X6020710 | CATCH BASIN TO BE ADJUSTED WITH SPECIAL FRAME AND GRATE | EACH | 2 | | |
| * | X6022850 | MANHOLE, SANITARY, 8' DIAMETER, TYPE 1 FRAME, CLOSED LID | EACH | 2 | | |
| * | X6022900 | CATCH BASINS TO BE RECONSTRUCTED (SPECIAL) | EACH | 2 | | |
| * | X6024200 | MANHOLES, TYPE A, 6'-DIAMETER, TYPE 1 FRAME, CLOSED LID, SPECIAL | EACH | 1 | | |
| * | X6026051 | SANITARY MANHOLES TO BE RECONSTRUCTED | EACH | 1 | | |
| * | X6026054 | SANITARY MANHOLES TO BE REMOVED | EACH | 2 | | |

## THE ILLINOIS STATE TOLL HIGHWAY AUTHORITY (TOLLWAY)

**CONTRACT NO. I-18-4428**

**BRIDGE RECONSTRUCTION (BN 261) BURLINGTON NORTHERN SANTA FE (BNSF) RAILWAY OVER**

**THE TRI-STATE TOLLWAY (I-294)**

**MILE POST 26.6**

**SCHEDULE OF PRICES**

| SP | PAY ITEM NUMBER | DESIGNATION | UNIT | QUANTITY | UNIT PRICE DOLLAR | AMOUNT DOLLAR |
|---|---|---|---|---|---|---|
| * | X6028000 | MANHOLES TO BE RECONSTRUCTED (SPECIAL) | EACH | 1 | | |
| * | X6040205 | FRAMES AND LIDS, SPECIAL | EACH | 2 | | |
| * | X6640050 | CHAIN LINK FENCE, 42" ATTACHED TO STRUCTURE (SPECIAL) | FOOT | 1,683 | | |
| * | X6640312 | CHAIN LINK GATES TO BE REMOVED AND RE-ERECTED | EACH | 2 | | |
| * | X7015005 | CHANGEABLE MESSAGE SIGN | CAL DAY | 365 | | |
| BDE | X7030005 | TEMPORARY PAVEMENT MARKING REMOVAL | SQ FT | 31,359 | | |
| * | X7200053 | REMOVE, STORE AND RE-ERECT SIGN PANEL (SPECIAL) | EACH | 29 | | |
| * | X7330086 | FURNISH AND INSTALL WALKWAY | FOOT | 3,917 | | |
| * | X8140105 | HANDHOLE (SPECIAL) | EACH | 2 | | |
| * | X8300001 | LIGHT POLE, SPECIAL | EACH | 2 | | |
| * | X8950130 | MODIFY EXISTING LIGHTING CONTROLLER | EACH | 1 | | |
| * | XX004360 | SANITARY SEWER BYPASS PUMPING | L SUM | 1 | | |
| * | Z0022800 | FENCE REMOVAL | FOOT | 644 | | |
| * | Z0033024 | MAINTAIN EXISTING LIGHTING SYSTEM | L SUM | 1 | | |
| * | Z0040000 | PIEZOMETER | EACH | 4 | | |
| * | Z0040530 | PIPE UNDERDRAIN REMOVAL | FOOT | 2,112 | | |
| GBSP | Z0046304 | PIPE UNDERDRAIN FOR STRUCTURES 4" | FOOT | 1,474 | | |

## THE ILLINOIS STATE TOLL HIGHWAY AUTHORITY (TOLLWAY)

CONTRACT NO. I-18-4428

BRIDGE RECONSTRUCTION (BN 261) BURLINGTON NORTHERN SANTA FE (BNSF) RAILWAY OVER

THE TRI-STATE TOLLWAY (I-294)

MILE POST 26.6

SCHEDULE OF PRICES

| SP | PAY ITEM NUMBER | DESIGNATION | UNIT | QUANTITY | UNIT PRICE DOLLAR | AMOUNT DOLLAR |
|---|---|---|---|---|---|---|
| GBSP | Z0046306 | PIPE UNDERDRAIN FOR STRUCTURES 6" | FOOT | 414 | | |
| * | Z0056648 | STORM SEWERS, TYPE 1, WATER MAIN QUALITY PIPE, 12" | FOOT | 33 | | |
| * | Z0056650 | STORM SEWERS, TYPE 1, WATER MAIN QUALITY PIPE, 15" | FOOT | 36 | | |
| * | Z0056668 | STORM SEWERS, TYPE 2, WATER MAIN QUALITY PIPE, 12" | FOOT | 67 | | |
| * | Z0056670 | STORM SEWERS, TYPE 2, WATER MAIN QUALITY PIPE, 18" | FOOT | 49 | | |
| * | Z0057950 | SANITARY SEWER 42" | FOOT | 615 | | |
| * | Z0065100 | SETTLEMENT PLATFORMS | EACH | 7 | | |
| * | Z0075400 | TIE RODS | EACH | 43 | | |
| * | Z0075496 | CONCRETE RETAINING WALL REMOVAL | FOOT | 1,171 | | |
| * | JI211110 | TOPSOIL EXCAVATION AND PLACEMENT | CU YD | 1,000 | | |
| * | JI211112 | TOPSOIL EXCAVATION AND DISPOSAL | CU YD | 18,380 | | |
| * | JI211126 | TOPSOIL FURNISH AND PLACE, 6" | SQ YD | 74,346 | | |
| * | JI213004 | EXPLORATION TRENCH, UTILITIES (HAND EXCAVATION) | FOOT | 100 | | |
| * | JI213006 | EXPLORATION TRENCH, UTILITIES (VACUUM EXCAVATION) | FOOT | 100 | | |
| * | JI406107 | ASPHALT TACK COAT | POUND | 4,475 | | |
| * | JI406510 | WARM-MIX ASPHALT SURFACE COURSE, MIX "D", N70 | TON | 1,012 | | |
| * | JI408100 | ASPHALT DAMP PROOFING | SQ YD | 903 | | |

## THE ILLINOIS STATE TOLL HIGHWAY AUTHORITY (TOLLWAY)

### CONTRACT NO. I-18-4428

### BRIDGE RECONSTRUCTION (BN 261) BURLINGTON NORTHERN SANTA FE (BNSF) RAILWAY OVER THE TRI-STATE TOLLWAY (I-294)

### MILE POST 26.6

### SCHEDULE OF PRICES

| SP | PAY ITEM NUMBER | DESIGNATION | UNIT | QUANTITY | UNIT PRICE DOLLAR | AMOUNT DOLLAR |
|---|---|---|---|---|---|---|
| * | JI420900 | DRILL AND GROUT #6 TIE BARS | EACH | 93 | | |
| * | JI440010 | CONCRETE MEDIAN BARRIER AND BASE REMOVAL | FOOT | 653 | | |
| * | JI481060 | AGGREGATE SHOULDERS, TYPE B 4" | SQ YD | 14 | | |
| * | JI481070 | AGGREGATE SHOULDERS, SPECIAL TYPE C | TON | 86 | | |
| * | JI481130 | AGGREGATE SHOULDERS WITH FILTER FABRIC, TYPE B 4" | SQ YD | 701 | | |
| * | JI482112 | WARM-MIX ASPHALT SHOULDERS (9 IN.) | SQ YD | 9,221 | | |
| * | JI503230 | MASS CONCRETE STRUCTURES | CU YD | 450.4 | | |
| * | JI542010 | END SECTION REMOVAL | EACH | 2 | | |
| * | JI580001 | RAILROAD DECK WATERPROOFING | SQ FT | 18,884 | | |
| * | JI593030 | ABANDON AND FILL EXISTING STORM SEWER | CU YD | 152 | | |
| * | JI601215 | SLOPE DRAIN, 15" | FOOT | 89 | | |
| * | JI601300 | PIPE UNDERDRAINS, 6" (SPECIAL) | FOOT | 16 | | |
| * | JI601320 | PIPE UNDERDRAINS, FABRIC LINED TRENCH 6" | FOOT | 2,469 | | |
| * | JI602117 | CATCH BASINS, TYPE G-2, TYPE G-2 MODIFIED FRAME AND GRATE | EACH | 14 | | |
| * | JI602184 | CATCH BASINS, TYPE A, 4'-DIAMETER, TYPE 20A FRAME AND GRATE | EACH | 2 | | |
| * | JI602367 | MANHOLE, TYPE A, 10'-DIAMETER, TYPE 20A FRAME AND GRATE | EACH | 4 | | |
| * | JI602368 | MANHOLE, TYPE A, 10'-DIAMETER, WITH TWO TYPE 1 FRAME, CLOSED LID, RESTRICTOR PLATE | EACH | 1 | | |

THE ILLINOIS STATE TOLL HIGHWAY AUTHORITY (TOLLWAY)

CONTRACT NO. I-18-4428

BRIDGE RECONSTRUCTION (BN 261) BURLINGTON NORTHERN SANTA FE (BNSF) RAILWAY OVER

THE TRI-STATE TOLLWAY (I-294)

MILE POST 26.6

SCHEDULE OF PRICES

| SP | PAY ITEM NUMBER | DESIGNATION | UNIT | QUANTITY | UNIT PRICE DOLLAR | AMOUNT DOLLAR |
|---|---|---|---|---|---|---|
| * | JI602791 | JUNCTION CHAMBER, LOCATION 1 | EACH | 1 | | |
| * | JI606015 | GUTTER, TYPE G-2, MODIFIED | FOOT | 2,875 | | |
| * | JI606020 | GUTTER, TYPE G-3 | FOOT | 471 | | |
| * | JI630002 | GALVANIZED STEEL PLATE BEAM GUARDRAIL, TYPE A, 6 FOOT POSTS | FOOT | 1,225 | | |
| * | JI631110 | TRAFFIC BARRIER TERMINAL, TYPE T1 (SPECIAL) TANGENT | EACH | 1 | | |
| * | JI631120 | TRAFFIC BARRIER TERMINAL, TYPE T2 | EACH | 3 | | |
| * | JI631135 | TRAFFIC BARRIER TERMINAL, TYPE T6B | EACH | 1 | | |
| * | JI637001 | CONCRETE BARRIER BASE | FOOT | 630 | | |
| * | JI637003 | CONCRETE BARRIER, DOUBLE FACE, 42 INCH | FOOT | 512 | | |
| * | JI664305 | RIGHT-OF-WAY FENCE, TYPE 1, 6' | FOOT | 3,150 | | |
| * | JI664310 | CORNER POST, RIGHT-OF-WAY FENCE, TYPE 1 | EACH | 9 | | |
| * | JI664315 | PULL POST, RIGHT-OF-WAY FENCE, TYPE 1 | EACH | 15 | | |
| * | JI664320 | END POST, RIGHT-OF-WAY FENCE, TYPE 1 | EACH | 11 | | |
| * | JI664325 | PEDESTRIAN GATE, RIGHT-OF-WAY FENCE, TYPE 1 | EACH | 5 | | |
| * | JI664400 | RIGHT OF WAY FENCE REMOVAL | FOOT | 4,596 | | |
| * | JI664620 | TEMPORARY CHAIN LINK FENCE 8' SCREENING, TYPE 2 | FOOT | 7,278 | | |
| * | JI669010 | REGULATED SUBSTANCES PRE-CONSTRUCTION PLAN | L SUM | 1 | | |
| * | JI669015 | ON-SITE MONITORING OF REGULATED SUBSTANCES | CAL DAY | 600 | | |
| * | JI669020 | REGULATED SUBSTANCES FINAL CONSTRUCTION REPORT | L SUM | 1 | | |
| * | JI680004 | HEADWALL TYPE I, 24" | EACH | 1 | | |

THE ILLINOIS STATE TOLL HIGHWAY AUTHORITY (TOLLWAY)

CONTRACT NO. I-18-4428

BRIDGE RECONSTRUCTION (BN 261) BURLINGTON NORTHERN SANTA FE (BNSF) RAILWAY OVER

THE TRI-STATE TOLLWAY (I-294)

MILE POST 26.6

SCHEDULE OF PRICES

| SP | PAY ITEM NUMBER | DESIGNATION | UNIT | QUANTITY | UNIT PRICE DOLLAR | AMOUNT DOLLAR |
|---|---|---|---|---|---|---|
| * | JI680011 | HEADWALL TYPE II, 48" | EACH | 1 | | |
| * | JI680122 | SLOPED HEADWALL TYPE III, 15", 1:3 | EACH | 2 | | |
| * | JI680125 | SLOPED HEADWALL TYPE III, 24", 1:3 | EACH | 3 | | |
| * | JI680127 | SLOPED HEADWALL TYPE III, 30", 1:3 | EACH | 1 | | |
| * | JI680140 | SLOPED HEADWALL TYPE III, 6", 1:6 | EACH | 2 | | |
| * | JI680141 | SLOPED HEADWALL TYPE III, 12", 1:6 | EACH | 1 | | |
| * | JI704000 | TEMPORARY CONCRETE BARRIER | FOOT | 6,113 | | |
| * | JI704005 | RELOCATE TEMPORARY CONCRETE BARRIER | FOOT | 58,013 | | |
| * | JI725000 | TERMINAL MARKER - DIRECT APPLIED | EACH | 1 | | |
| * | JI781010 | RAISED PAVEMENT LANE MARKER, REFLECTOR | EACH | 378 | | |
| * | JI782014 | GUARDRAIL BARRIER REFLECTORS, TYPE B | EACH | 13 | | |
| * | JI782022 | BARRIER WALL REFLECTORS, TYPE C | EACH | 141 | | |
| * | JI811276 | CONDUIT ATTACHED TO STRUCTURE, 2" DIA., STAINLESS STEEL | FOOT | 20 | | |
| * | JI830210 | TEMPORARY WOOD POLE, 90 FEET, CLASS 2, TO REMAIN IN PLACE | EACH | 2 | | |
| ** | JS107360 | DUST CONTROL WATERING | UNIT | 330 | | |
| ** | JS120100 | TRAILER MOUNTED FULL MATRIX PORTABLE CHANGEABLE MESSAGE SIGNS | EACH | 2.0 | | |
| ** | JS250220 | SEEDING, CLASS 2E | ACRE | 0.7 | | |

## THE ILLINOIS STATE TOLL HIGHWAY AUTHORITY (TOLLWAY)

**CONTRACT NO. I-18-4428**

**BRIDGE RECONSTRUCTION (BN 261) BURLINGTON NORTHERN SANTA FE (BNSF) RAILWAY OVER**

**THE TRI-STATE TOLLWAY (I-294)**

**MILE POST 26.6**

**SCHEDULE OF PRICES**

| SP | PAY ITEM NUMBER | DESIGNATION | UNIT | QUANTITY | UNIT PRICE DOLLAR | AMOUNT DOLLAR |
|---|---|---|---|---|---|---|
| ** | JS250314 | SEEDING, CLASS 4B | ACRE | 0.6 | | |
| ** | JS250318 | SEEDING, CLASS 4F | ACRE | 10.2 | | |
| ** | JS250320 | SEEDING, CLASS 5 | ACRE | 10.2 | | |
| ** | JS250324 | SEEDING, CLASS 5B | ACRE | 0.6 | | |
| ** | JS280020 | MANAGEMENT OF EROSION AND SEDIMENT CONTROL | CAL. MO. | 33 | | |
| ** | JS280040 | EROSION AND SEDIMENT CONTROL-CLEANOUT | CU YD | 50 | | |
| ** | JS280050 | SILT FENCE | FOOT | 7,515 | | |
| ** | JS280051 | RE-ERECT SILT FENCE | FOOT | 1,500 | | |
| ** | JS280070 | STABILIZED CONSTRUCTION ENTRANCE | SQ YD | 2,131 | | |
| ** | JS280080 | FLOTATION BOOM | FOOT | 200 | | |
| ** | JS280100 | SUPER SILT FENCE | FOOT | 608 | | |
| ** | JS280120 | TREE PROTECTION | FOOT | 500 | | |
| ** | JS280140 | TEMPORARY RIPRAP | TON | 108 | | |
| ** | JS280151 | SAME-DAY STABILIZATION | SQ YD | 40,366 | | |
| ** | JS280180 | RECTANGULAR INLET PROTECTION | EACH | 6 | | |
| ** | JS280205 | FILTER FABRIC INLET PROTECTION, COVER TYPE | EACH | 12 | | |
| ** | JS280210 | FILTER FABRIC INLET PROTECTION, BASKET TYPE | EACH | 54 | | |

THE ILLINOIS STATE TOLL HIGHWAY AUTHORITY (TOLLWAY)

CONTRACT NO. I-18-4428

BRIDGE RECONSTRUCTION (BN 261) BURLINGTON NORTHERN SANTA FE (BNSF) RAILWAY OVER

THE TRI-STATE TOLLWAY (I-294)

MILE POST 26.6

SCHEDULE OF PRICES

| SP | PAY ITEM NUMBER | DESIGNATION | UNIT | QUANTITY | UNIT PRICE DOLLAR | AMOUNT DOLLAR |
|---|---|---|---|---|---|---|
| ** | JS280305 | TEMPORARY DITCH CHECKS | FOOT | 1,000 | | |
| * | JS670CSP | FIELD OFFICE, TYPE C (SPECIAL) | CAL MO | 36 | | |
| ** | JS671020 | MOBILIZATION, TOLLWAY (MODIFIED) | L SUM | 1 | | |
| * | JS701010 | MAINTENANCE OF TRAFFIC | L SUM | 1 | | |
| ** | JS810242 | CONDUIT ENCASED IN CONCRETE, 6" DIA. PVC | FOOT | 208 | | |
| ** | JS810875 | UNDERGROUND CONDUIT, COILABLE NONMETALLIC CONDUIT, 2" DIA. | FOOT | 1,865 | | |
| ** | JS810879 | UNDERGROUND CONDUIT, COILABLE NONMETALLIC CONDUIT, 4" DIA. | FOOT | 174 | | |
| ** | JS811032 | CONDUIT ATTACHED TO STRUCTURE, 1" DIA., PVC COATED GALVANIZED STEEL | FOOT | 393 | | |
| ** | JS812023 | CONDUIT EMBEDDED IN STRUCTURE, 2" DIA., PVC | FOOT | 45 | | |
| ** | JS812025 | CONDUIT EMBEDDED IN STRUCTURE, 3" DIA., PVC | FOOT | 738 | | |
| ** | JS813001 | JUNCTION BOX, STAINLESS STEEL, EMBEDDED IN STRUCTURE, 20" X 12" X 8" | EACH | 1 | | |
| ** | JS813022 | JUNCTION BOX, STAINLESS STEEL, ATTACHED TO STRUCTURE, 6" X 6" X 4" | EACH | 5 | | |
| ** | JS813053 | JUNCTION BOX, STAINLESS STEEL, ATTACHED TO STRUCTURE, 12" X 10" X 6" | EACH | 1 | | |
| * | JS813083 | JUNCTION BOX, STAINLESS STEEL, ATTACHED TO STRUCTURE, 18" X 18" X 8" | EACH | 2 | | |
| ** | JS814002 | HEAVY-DUTY HANDHOLE, TOLLWAY | EACH | 2 | | |
| ** | JS817211 | ELECTRIC CABLE IN CONDUIT, 600V (XLP-TYPE USE) 1/C NO. 10 | FOOT | 2,206 | | |
| ** | JS817212 | ELECTRIC CABLE IN CONDUIT, 600V (XLP-TYPE USE) 1/C NO. 8 | FOOT | 2,309 | | |

## THE ILLINOIS STATE TOLL HIGHWAY AUTHORITY (TOLLWAY)

### CONTRACT NO. I-18-4428

### BRIDGE RECONSTRUCTION (BN 261) BURLINGTON NORTHERN SANTA FE (BNSF) RAILWAY OVER THE TRI-STATE TOLLWAY (I-294)

### MILE POST 26.6

### SCHEDULE OF PRICES

| SP | PAY ITEM NUMBER | DESIGNATION | UNIT | QUANTITY | UNIT PRICE DOLLAR | AMOUNT DOLLAR |
|---|---|---|---|---|---|---|
| ** | JS817213 | ELECTRIC CABLE IN CONDUIT, 600V (XLP-TYPE USE) 1/C NO. 6 | FOOT | 212 | | |
| ** | JS817215 | ELECTRIC CABLE IN CONDUIT, 600V (XLP-TYPE USE) 1/C NO. 2 | FOOT | 8,804 | | |
| ** | JS821002 | UNDERPASS LUMINAIRE, 150 WATT, HIGH PRESSURE SODIUM VAPOR | EACH | 4 | | |
| ** | JS821003 | TEMPORARY LUMINAIRE, SODIUM VAPOR, HORIZONTAL MOUNT, 400 WATT | EACH | 8 | | |
| ** | JS821110 | UNDERPASS LUMINAIRE, LED | EACH | 4 | | |
| ** | JS830027 | TEMPORARY WOOD POLE, 50 FT., CLASS 4 | EACH | 4 | | |
| ** | JS830030 | TEMPORARY WOOD POLE, 60 FT., CLASS 4 | EACH | 3 | | |
| ** | JS830033 | TEMPORARY WOOD POLE, 70 FT., CLASS 3 | EACH | 1 | | |
| ** | JS830034 | TEMPORARY WOOD POLE, 70 FT., CLASS 3, 15 FT. MAST ARM | EACH | 8 | | |
| * | JS830145 | WOOD POLE, 45 FEET, CLASS 2 | EACH | 5 | | |
| ** | JS836007 | LIGHT POLE FOUNDATION (ROADWAY) MEDIAN, TYPE 3 | EACH | 4 | | |
| ** | JS842100 | REMOVAL OF UNDERPASS LUMINAIRE | EACH | 4 | | |
| ** | JS842105 | POLE FOUNDATION, REMOVED | EACH | 4 | | |
| ** | JS846001 | MAINTAIN LIGHTING SYSTEM | L SUM | 1 | | |
| * | JT130707 | STANDBY GENERATOR AND AUTOMATIC TRANSFER SWITCH | L SUM | 1 | | |
| * | JT130708 | TEMPORARY PORTABLE GENERATOR | L SUM | 1 | | |
| * | JT130709 | WELL HOUSE ELECTRICAL WORK | L SUM | 1 | | |
| * | JT131005 | BUILDING INSPECTIONS | L SUM | 1 | | |
| * | JT132810 | ITS POLE MOUNTED ENCLOSURE (CCTV OR MVDS) | EACH | 1 | | |
| * | JT132814 | ITS DISCONNECT SWITCH ASSEMBLY | EACH | 1 | | |

THE ILLINOIS STATE TOLL HIGHWAY AUTHORITY (TOLLWAY)

CONTRACT NO. I-18-4428

BRIDGE RECONSTRUCTION (BN 261) BURLINGTON NORTHERN SANTA FE (BNSF) RAILWAY OVER

THE TRI-STATE TOLLWAY (I-294)

MILE POST 26.6

SCHEDULE OF PRICES

| SP | PAY ITEM NUMBER | DESIGNATION | UNIT | QUANTITY | UNIT PRICE DOLLAR | AMOUNT DOLLAR |
|---|---|---|---|---|---|---|
| * | JT132820 | CCTV CAMERA, ITS ASSEMBLY (TOLLWAY) | EACH | 1 | | |
| * | JT132830 | FIBER OPTIC COMMUNICATIONS, ITS ASSEMBLY | EACH | 1 | | |
| * | JT134000 | MAINTAIN INTELLIGENT TRANSPORTATION SYSTEMS | L SUM | 1 | | |
| * | JT134037 | ITS ELEMENT SITE GROUNDING – POLE MOUNTED ASSEMBLY | EACH | 1 | | |
| * | JT135042 | WEBCAM | EACH | 1 | | |
| * | JT160132 | HANDHOLE FOR SINGLE MODE FIBER OPTIC CABLE, 48"X72"X36" | EACH | 13 | | |
| * | JT211A11 | SUBGRADE AGGREGATE 12 IN. | CU YD | 1,546 | | |
| * | JT280500 | SEDIMENT FILTER BAG | EACH | 30 | | |
| * | JT280510 | FLOC LOG | EACH | 100 | | |
| * | JT280530 | IN-LINE FLOCCULATION SYSTEM | EACH | 3 | | |
| * | JT285055 | ARTICULATED CONCRETE BLOCK REVETMENT SYSTEM, TYPE 1 | SQ YD | 503 | | |
| * | JT311060 | AGGREGATE SUBBALLAST (SPECIAL) | CU YD | 11,033 | | |
| * | JT546000 | TELEVISION INSPECTION OF SEWER | FOOT | 4,380 | | |
| * | JT599040 | REMOVAL OF EXISTING NOISE ABATEMENT WALL | SQ FT | 6,805 | | |
| * | JT599P01 | PERFORMANCE BASED NOISE ABATEMENT WALL (PRECAST CONCRETE) NO. 1 | L SUM | 1 | | |
| * | JT637023 | CONCRETE MEDIAN BARRIER TRANSITION, TYPE V-F | FOOT | 118 | | |
| * | JT701030 | SUPPLEMENTAL BARRICADE | EACH/DAY | 1,000 | | |
| * | JT701031 | SUPPLEMENTAL SIGNING | SQ FT | 200 | | |
| * | JT701032 | SUPPLEMENTAL FLASHING ARROW BOARD (PER DAY) | EACH/DAY | 30 | | |
| * | JT701033 | SUPPLEMENTAL FLASHING ARROW BOARD (PER WEEK) | EACH/WEEK | 4 | | |

THE ILLINOIS STATE TOLL HIGHWAY AUTHORITY (TOLLWAY)

CONTRACT NO. I-18-4428

BRIDGE RECONSTRUCTION (BN 261) BURLINGTON NORTHERN SANTA FE (BNSF) RAILWAY OVER

THE TRI-STATE TOLLWAY (I-294)

MILE POST 26.6

SCHEDULE OF PRICES

| SP | PAY ITEM NUMBER | DESIGNATION | UNIT | QUANTITY | UNIT PRICE DOLLAR | AMOUNT DOLLAR |
|---|---|---|---|---|---|---|
| * | JT701034 | SUPPLEMENTAL FLASHING ARROW BOARD (PER MONTH) | EACH/ MONTH | 4 | | |
| * | JT701035 | SUPPLEMENTAL MAINTENANCE OF TRAFFIC | DAY | 30 | | |
| * | JT703104 | LATE SEASON TEMPORARY PAVEMENT MARKING, 4" | FOOT | 243,352 | | |
| * | JT726040 | REMOVE AND REINSTALL MILE POST MARKER | EACH | 2 | | |
| * | JT783005 | WATERBLAST PAVEMENT MARKING REMOVAL WITH VACUUM RECOVERY | SQ FT | 90,051 | | |
| * | JT783009 | RAISED PAVEMENT LANE MARKER, REFLECTOR REMOVAL | EACH | 378 | | |
| * | JT810873 | UNDERGROUND CONDUIT, COILABLE NONMETALLIC CONDUIT, SDR 11, 1 1/4" DIA. | FOOT | 272 | | |
| * | JT810874 | UNDERGROUND CONDUIT, COILABLE NONMETALLIC CONDUIT, SDR 11, 1 1/2" DIA. | FOOT | 2,575 | | |
| * | JT810881 | UNDERGROUND CONDUIT, COILABLE NONMETALLIC CONDUIT, SDR 11, 6" DIA. | FOOT | 1,782 | | |
| ** | JT830042 | WOOD POLE, 90 FT., CLASS 2 | EACH | 4 | | |
| * | JT836029 | ITS CONCRETE SERVICE PAD, TYPE C | EACH | 1 | | |
| * | JT844010 | REMOVE AND REINSTALL LIGHTING UNIT | EACH | 4 | | |
| * | JT900442 | CURED-IN-PLACE PIPE LINER, 42" | FOOT | 667 | | |
| * | JT901056 | LOCATOR TRACER WIRE | FOOT | 5,169 | | |
| * | JT901135 | DEWATERING, SPECIAL | L SUM | 1 | | |
| | | | | | TOTAL AMOUNT OF CORE WORK: | |
| | | | | | | |
| * | JT155001 | CONTRACTOR'S QUALITY PROGRAM | L SUM | 1 | $1,110,000 | $1,110,000.00 |
| | | | | | | |

## THE ILLINOIS STATE TOLL HIGHWAY AUTHORITY (TOLLWAY)

### CONTRACT NO. I-18-4428

### BRIDGE RECONSTRUCTION (BN 261) BURLINGTON NORTHERN SANTA FE (BNSF) RAILWAY OVER THE TRI-STATE TOLLWAY (I-294)

### MILE POST 26.6

### SCHEDULE OF PRICES

| SP | PAY ITEM NUMBER | DESIGNATION | UNIT | QUANTITY | UNIT PRICE DOLLAR | AMOUNT DOLLAR |
|---|---|---|---|---|---|---|
| * | JT150100 | CONTRACT SPECIFIED EXTRA WORK ITEMS | UNIT | 100,000 | $ 1.00 | $ 100,000.00 |
| * | JT151500 | CONTRACT ADJUSTMENT ALLOWANCE FOR TEMPERATURE CONTROL OF CONCRETE | UNIT | 75,000 | $ 1.00 | $ 75,000.00 |
| * | JT154005 | EMERGENCY PAVEMENT AND SHOULDER REPAIRS | UNIT | 25,000 | $ 1.00 | $ 25,000.00 |
| * | JT154016 | ALLOWANCE FOR UNFORESEEN EROSION CONTROL MEASURES | UNIT | 20,000 | $ 1.00 | $ 20,000.00 |
| * | JT154045 | CONTRACT ALLOWANCE FOR COLD WEATHER PAVEMENT MARKINGS | UNIT | 50,000 | $ 1.00 | $ 50,000.00 |
| * | JT154051 | CONTRACT ALLOWANCE FOR UNSUITABLE SOIL | UNIT | 6,000,000 | $ 1.00 | $ 6,000,000.00 |
| * | JT154067 | CONTRACT ALLOWANCE FOR CONSTRUCTIONWORKS APPRENTICES | UNIT | 100,000 | $ 1.00 | $ 100,000.00 |
| * | JT154100 | ALLOWANCE FOR SUPPLEMENTAL FLAGGING | UNIT | 300,000 | $ 1.00 | $ 300,000.00 |
| * | JT154103 | ALLOWANCE FOR RAILROAD FLAGGING AND SERVICES | UNIT | 13,000,000 | $ 1.00 | $ 13,000,000.00 |
| * | JT154150 | ALLOWANCE FOR STEEL COSTS ADJUSTMENT | UNIT | 75,000 | $ 1.00 | $ 75,000.00 |
| * | JT154160 | ALLOWANCE FOR FUEL COSTS ADJUSTMENT | UNIT | 50,000 | $ 1.00 | $ 50,000.00 |
| | | | | | | |
| | 999NEG20 | DAMAGE TO ILLINOIS TOLLWAY'S OPERATIONAL FACILITIES PER S.P. 115.5 - TRI-STATE | HOUR | | (10,000) | |
| | 999NEG30 | DAMAGE TO ILLINOIS TOLLWAY'S OPERATIONAL FACILITIES PER S.P. 115.5 - ALL ROADWAYS OFF-PEAK | HOUR | | (2,000) | |
| | 999NEG31 | DAMAGE TO ELECTRICAL FACILITIES PER TOLLWAY SUPPL. SPEC. 107.30 (b) | INC/DAY | | (1,000) | |

THE ILLINOIS STATE TOLL HIGHWAY AUTHORITY (TOLLWAY)

CONTRACT NO. I-18-4428

BRIDGE RECONSTRUCTION (BN 261) BURLINGTON NORTHERN SANTA FE (BNSF) RAILWAY OVER

THE TRI-STATE TOLLWAY (I-294)

MILE POST 26.6

SCHEDULE OF PRICES

| SP | PAY ITEM NUMBER | DESIGNATION | UNIT | QUANTITY | UNIT PRICE DOLLAR | AMOUNT DOLLAR |
|---|---|---|---|---|---|---|
| | 999NEG32 | LIQUIDATED DAMAGES FOR DELAY IN SUBMITTAL OF PROGRESS SCHEDULE PER TOLLWAY SUPPL. SPEC. 108.02 (e) | DAY | | (300) | |
| | 999NEG33 | NON-COMPLIANCE WITH EROSION AND SEDIMENT CONTROL PER TOLLWAY SUPPL. SPEC. 280.02 (b) (1) | INC/DAY | | See Note 2 | |
| | 999NEG34 | NON-COMPLIANCE WITH RESPONSIBILITY FOR CONSTRUCTION HAULING EQUIPMENT PER TOLLWAY SUPPL. SPEC. 105.15 | DAY | | (1,000) | |
| | 999NEG35 | FAILURE TO RESPOND TO REGULATORY AGENCY REQUESTS, PER TOLLWAY SUPPL. SPEC. 280.02 (b) (2) | OCCUR | | (25,000) | |
| | 999NEG37 | NON-COMPLIANCE WITH TOLLWAY MAINTENANCE OF TRAFFIC PER TOLLWAY SUPPL. SPEC. 701.01 (b) (1) | INC/DAY | | (2,500) | |
| | 999NEG38 | FAILURE TO RESPOND TO RE-ESTABLISH DEVICES PER TOLLWAY SUPPL. SPEC. 701.01 (b) (2) | OCCUR | | (2,500) | |
| | 999NEG39 | FAILURE TO REPAIR IMPACT ATTENUATORS, TEMPORARY PER TOLLWAY SUPPL. SPEC. 701.01 (b) (3) | OCCUR | | (2,500) | |
| | 999NEG40 | LOSS OR DAMAGE TO TOLLWAY OWNED DEVICES PER TOLLWAY SUPPL. SPEC. 701.01 (b) (4) | SQ. FT. | | (100) | |
| | 999NEG42 | NON-COMPLIANCE WITH MAINTAIN LIGHTING SYSTEM PER TOLLWAY SUPPL. SPEC. 846.06 (a) | INC/DAY | | (1,000) | |
| | 999NEG43 | FAILURE TO RESPOND TO MAINTAIN LIGHTING SYSTEM PER TOLLWAY SUPPL. SPEC. 846.06 (b) | OCCUR | | (1,000) | |
| | 999NEG44 | LIQUIDATED DAMAGES FOR NON-COMPLETION PER S.P. 105.1.1 | CAL DAY | | (12,000) | |
| | 999NEG45 | LIQUIDATED DAMAGES FOR NON-COMPLETION PER S.P. 105.1.2 | CAL DAY | | (42,000) | |
| | 999NEG46 | LIQUIDATED DAMAGES FOR NON-COMPLETION PER S.P. 105.1.3 | CAL DAY | | (12,000) | |
| | 999NEG47 | LIQUIDATED DAMAGES FOR NON-COMPLETION PER S.P. 105.1.4 | CAL DAY | | (62,000) | |
| | 999NEG48 | LIQUIDATED DAMAGES FOR NON-COMPLETION PER S.P. 105.1.5 | CAL DAY | | (62,000) | |

## THE ILLINOIS STATE TOLL HIGHWAY AUTHORITY (TOLLWAY)

**CONTRACT NO. I-18-4428**

**BRIDGE RECONSTRUCTION (BN 261) BURLINGTON NORTHERN SANTA FE (BNSF) RAILWAY OVER**

**THE TRI-STATE TOLLWAY (I-294)**

**MILE POST 26.6**

**SCHEDULE OF PRICES**

| SP | PAY ITEM NUMBER | DESIGNATION | UNIT | QUANTITY | UNIT PRICE DOLLAR | AMOUNT DOLLAR |
|---|---|---|---|---|---|---|
| | 999NEG49 | DAMAGE TO FIBER OPTIC UTILITIES PER S.P. 115.3 | OCCUR | | (10,000) | |
| | 999NEG52 | FAILURE TO RESPOND FOR PATCHING BARRICADES PER PORTLAND CEMENT CONCRETE PATCHING SPECIAL PROVISION | OCCUR | | (500) | |
| | 999NEG53 | NON-COMPLIANCE WITH CONTRACTOR QUALITY PROGRAM SPECIAL PROVISION | OCCUR | | (1,000) | |
| | 999NEG54 | DAMAGE TO TOLLWAY MULTI-MODE CABLE, DMS SIGNS, CAMERAS, TELECOMMUNICATION, CABLE, ELECTRICAL, WATER AND SEWER PER S.P. 115.4 | OCCUR | | (1,000) | |
| | 999NEG90 | ONE LANE OR RAMP BLOCKED PER S.P. FAILURE TO OPEN LANES TO TRAFFIC | 15 MINUTES | | (3,000) | |
| | | **ADJUSTMENTS** | | | | |
| | 999ADJ20 | PROTECTION METHOD I FOR CONCRETE IN SUBSTRUCTURES, CULVERTS, PUMP HOUSES, AND RETAINING WALLS AS PER IDOT Article 503.22 | CU YD | | See Note 1 | |
| | 999ADJ21 | PROTECTION METHOD II FOR CONCRETE IN SUBSTRUCTURES, CULVERTS, PUMP HOUSES, AND RETAINING WALLS AS PER IDOT Article 503.22 | CU YD | | See Note 1 | |
| | 999ADJ24 | PROTECTION METHODS I, II or III FOR CONCRETE IN FOOTINGS AS PER IDOT Article 503.22 | CU YD | | See Note 1 | |
| | 999ADJ25 | PROTECTION METHODS I FOR CONCRETE IN SLOPE WALLS AS PER IDOT Article 503.22 | SQ YD | | See Note 1 | |

THE ILLINOIS STATE TOLL HIGHWAY AUTHORITY (TOLLWAY)

CONTRACT NO. I-18-4428

BRIDGE RECONSTRUCTION (BN 261) BURLINGTON NORTHERN SANTA FE (BNSF) RAILWAY OVER

THE TRI-STATE TOLLWAY (I-294)

MILE POST 26.6

SCHEDULE OF PRICES

| SP | PAY ITEM NUMBER | DESIGNATION | UNIT | QUANTITY | UNIT PRICE DOLLAR | AMOUNT DOLLAR |
|---|---|---|---|---|---|---|
| | 999ADJ45 | CONSTRUCTIONWORKS APPRENTICES WAGE RATE | HOUR | | 15.00 | |
| | | TOTAL AMOUNT OF CONTRACTOR'S QUALITY PROGRAM (CQP) + CONTINGENCY WORK | | | | 20,905,000 |

| | |
|---|---|
| TOTAL AMOUNT OF CORE WORK + AMOUNT OF CONTRACTOR'S QUALITY PROGRAM + TOTAL AMOUNT OF CONTINGENCY WORK = TOTAL AMOUNT OF BASE BID | |
| BID CREDIT | |
| AWARD CRITERIA | |

LEGEND FOR SP COLUMN

| | |
|---|---|
| * | INDICATES SPECIAL PROVISION |
| ** | INDICATES TOLLWAY SUPPLEMENTAL SPECIFICATIONS |
| *** | INDICATES IDOT RECURRING SPECIAL PROVISION |
| BDE | INDICATES IDOT BDE SPECIAL PROVISION |
| GBSP | INDICATES IDOT GUIDE BRIDGE SPECIAL PROVISION |

**Note 1: The Contractor should leave the unit price value blank. The unit price will be entered by the Tollway after receipt of bids.**

**Note 2: The Contractor should leave the unit price value blank. The deduction base value is $1,000.00 and will be adjusted by a Gravity Adjustment Factor according to Article 280.02(b)(1) Table A of the Supplemental Specifications, assessed for each infraction.**

ILLINOIS STATE TOLL HIGHWAY AUTHORITY (Illinois Tollway)
SPECIAL PROVISIONS
CONTRACT NUMBER I-18-4428
Bridge Reconstruction Carrying the
Burlington Northern Santa Fe Railway (BNSF)
Over the Tri-State Tollway (I-294)
Mile Post 26.6

TABLE OF CONTENTS

VOLUME II


S.P. 101 LOCATION AND SCOPE OF WORK ..... J-1R

S.P. 102 CONTRACT I-18-4428 INDEX OF DRAWINGS ..... J-2

S.P. 103 CONTRACT COMPLETION DATE, SUBSTANTIAL AND INTERIM COMPLETION DATES ..... J-11

S.P. 104 NOTICE TO PROCEED/COMMENCEMENT OF ON-SITE WORK ..... J-12

S.P. 105 LIQUIDATED DAMAGES FOR DELAY(S) AND INCENTIVE PLAN(S) ..... J-12

S.P. 106 COOPERATION WITH UTILITIES AND OTHERS ..... J-13

S.P. 107 INSURANCE ..... J-44

S.P. 108 INDEMNIFICATION ..... J-45

S.P. 109 WORKING HOURS AND PROSECUTION OF THE WORK ..... J-46

S.P. 110 LIST OF INCIDENTALS TO THE PAY ITEMS ..... J-51

S.P. 111 EROSION AND SEDIMENT CONTROL ..... J-53

S.P. 112 QUALIFIED PRODUCTS ..... J-89

S.P. 113 RESERVED ..... J-90

S.P. 114 DELIVERY OF SALVAGEABLE MATERIAL TO THE ILLINOIS TOLLWAY .. J-90

S.P. 115 ILLINOIS TOLLWAY OPERATIONAL FACILITIES ..... J-91

S.P. 116 APPROVING A PART OR PORTION OF THE WORK FOR BENEFICIAL USE ..... J-94

S.P. 117 RESERVED ..... J-94

S.P. 118 RIGHT-OF-WAY ..... J-95R

S.P. 119 AVAILABLE GEOTECHNICAL INFORMATION ..... J-95

S.P. 120 AVAILABLE RECORD DRAWINGS ..... J-96

S.P. 121 ELECTRONIC DATA FILES AVAILABLE ..... J-96R

WARRANTY (ILLINOIS TOLLWAY) ..... J-98

TREE REMOVAL (ILLINOIS TOLLWAY) ..... J-101

EARTH AND ROCK EXCAVATION (ILLINOIS TOLLWAY) ..... J-102R

EMBANKMENT ..... J-105A

DEMOLITION OF STRUCTURES (ILLINOIS TOLLWAY GBSP) ..... J-106

COFFERDAM (TYPE 1) ..... J-111

ERECTION OF GIRDERS (ILLINOIS TOLLWAY GBSP) ..... J-113

PILE DRIVING ANALYZER TESTING ..... J-117A

WAVE EQUATION ANALYSIS OF PILES ..... J-117D

CONCRETE WINGWALL REMOVAL ..... J-118

REVETMENT MAT REMOVAL ..... J-119

PROPOSED STORM SEWER CONNECTION TO EXISTING STORM SEWER ..... J-120

PROPOSED STORM SEWER CONNECTION TO EXISTING MANHOLE ..... J-121

RETAINING WALL REMOVAL ..... J-122

DRAINAGE SYSTEM (SPECIAL) ..... J-123

BIAXIAL GEOGRID ..... J-125

REMOVE EXISTING CABLE ..... J-126

SEWERS TO BE CLEANED ..... J-127

COMBINED SEWER REMOVAL 42" ..... J-129R

FURNISH AND INSTALL HANDRAIL ..... J-130R

LIGHTING STANDARD, TYPE 4 ..... J-133

RELOCATE BENCH ..... J-134

SLOPE INCLINOMETERS ..... J-135

CONSTRUCTION VIBRATION MONITORING ..... J-137

TEMPORARY BULKHEAD ..... J-140

COARSE AGGREGATE ..... J-141

COARSE AGGREGATE BACKFILL (SPECIAL) ..... J-142

STORM SEWERS JACKED IN PLACE, 48" (SPECIAL) ..... J-143

PRECAST CONCRETE BOX CULVERT (SPECIAL) ..... J-146

FENCE (SPECIAL) ..... J-147RR

CONCRETE STRUCTURES (SPECIAL) ..... J-151A

ELASTOMERIC BEARING ASSEMBLY ..... J-152

ABANDON EXISTING WATER MAIN, FILL WITH CLSM ..... J-157

MANHOLES, TYPE A, 8'-DIAMETER, WITH 2 TYPE 1 FRAME, CLOSED LID, RESTRICTOR PLATE ..... J-158

CATCH BASINS TO BE ADJUSTED WITH SPECIAL FRAME AND GRATE ..... J-159

MANHOLE, SANITARY, 8'-DIAMETER, TYPE 1 FRAME, CLOSED LID ..... J-160R

CATCH BASINS TO BE RECONSTRUCTED (SPECIAL) ..... J-161

MANHOLES, TYPE A, 6'-DIAMETER, TYPE 1 FRAME, CLOSED LID, SPECIAL ..... J-162

SANITARY MANHOLES TO BE RECONSTRUCTED ..... J-163

SANITARY MANHOLES TO BE REMOVED ..... J-164R

MANHOLES TO BE RECONSTRUCTED (SPECIAL) ..... J-165

FRAMES AND LIDS, SPECIAL ..... J-166

CHAIN LINK FENCE, 42" ATTACHED TO STRUCTURE (SPECIAL) ..... J-167

CHAIN LINK GATES TO BE REMOVED AND RE-ERECTED ..... J-169

CHANGEABLE MESSAGE SIGN ..... J-170

REMOVE, STORE, AND RE-ERECT SIGN PANEL (SPECIAL) ..... J-171

FURNISH AND INSTALL WALKWAY ..... J-172

HANDHOLE (SPECIAL) ..... J-175R

LIGHT POLE, SPECIAL ..... J-176

MODIFY EXISTING LIGHTING CONTROLLER ..... J-181

SANITARY SEWER BYPASS PUMPING ..... J-182R

FENCE REMOVAL ..... J-183

MAINTAIN EXISTING LIGHTING SYSTEM ..... J-184

PIEZOMETER ..... J-188

PIPE UNDERDRAIN REMOVAL ..... J-189

STORM SEWERS, WATER MAIN QUALITY PIPE ..... J-190

SANITARY SEWER ..... J-191

SETTLEMENT PLATFORMS ..... J-192

TIE RODS ..... J-193

CONCRETE RETAINING WALL REMOVAL ..... J-194

TOPSOIL AND COMPOST (ILLINOIS TOLLWAY) ..... J-195

EXPLORATION TRENCH, UTILITIES (ILLINOIS TOLLWAY) ..... J-198

ASPHALT – TACK COAT (ILLINOIS TOLLWAY) ..... J-200

ASPHALT BINDER AND SURFACE COURSE MIXTURES (ILLINOIS TOLLWAY) ..... J-202

ASPHALT DAMP-PROOFING ..... J-214

DRILL AND GROUT #6 TIE BARS (ILLINOIS TOLLWAY) ..... J-215

CONCRETE MEDIAN BARRIER AND BASE REMOVAL (CTS) ..... J-216

AGGREGATE SHOULDERS (TOLLWAY RECURRING) ..... J-217

ASPHALT SHOULDERS (ILLINOIS TOLLWAY) ..... J-220

MASS CONCRETE STRUCTURES (ILLINOIS TOLLWAY GBSP) ..... J-223

END SECTION REMOVAL ..... J-228

RAILROAD DECK WATERPROOFING ..... J-229

ABANDON AND FILL EXISTING STORM SEWER ..... J-232

SLOPE DRAIN, 15" ..... J-233

PIPE UNDERDRAINS (ILLINOIS TOLLWAY) ..... J-234

CATCH BASINS, TYPE G-2, TYPE G-2 MODIFIED FRAME AND GRATE ..... J-237

CATCH BASINS, TYPE A, 4'-DIAMETER, TYPE 20A FRAME AND GRATE ..... J-238

MANHOLE, TYPE A, 10'-DIAMETER, TYPE 20A FRAME AND GRATE..... J-239

MANHOLE, TYPE A, 10'-DIAMETER, WITH 2 TYPE 1 FRAME, CLOSED LID, RESTRICTOR PLATE..... J-240

JUNCTION CHAMBER, LOCATION 1 .....J-241R

GUTTER, TYPE G (CTS)..... J-243

GALVANIZED STEEL PLATE BEAM GUARDRAIL (ILLINOIS TOLLWAY)..... J-244

TRAFFIC BARRIER TERMINAL, TYPE T1 (SPECIAL) TANGENT ..... J-247

TRAFFIC BARRIER TERMINAL, TYPE T2 (ILLINOIS TOLLWAY) ..... J-250

TRAFFIC BARRIER TERMINAL, TYPE T6B (ILLINOIS TOLLWAY)..... J-253

CONCRETE BARRIER (ILLINOIS TOLLWAY) ..... J-256

RIGHT-OF-WAY FENCE, TYPE 1 (ILLINOIS TOLLWAY) ..... J-258

RIGHT-OF-WAY FENCE REMOVAL (ILLINOIS TOLLWAY)..... J-264

TEMPORARY CHAIN LINK FENCE 8' WITH SCREENING (CTS) ..... J-266

HEADWALL AND SLOPED HEADWALL (CTS)(V1.0) ..... J-268

TEMPORARY CONCRETE BARRIER (ILLINOIS TOLLWAY)..... J-270

TERMINAL MARKER DIRECT APPLIED (ILLINOIS TOLLWAY)..... J-273

RAISED PAVEMENT LANE MARKER (ILLINOIS TOLLWAY)..... J-274

GUARDRAIL BARRIER REFLECTORS, TYPE B (ILLINOIS TOLLWAY) ..... J-278

BARRIER WALL REFLECTORS, TYPE C (ILLINOIS TOLLWAY)..... J-280

CONDUIT ATTACHED TO STRUCTURE, 2" DIA., STAINLESS STEEL..... J-282

TEMPORARY WOOD POLE, CLASS 2, TO REMAIN IN PLACE..... J-283

FIELD OFFICE, TYPE C (SPECIAL) (CTS V 1.0) .....J-284R

MAINTENANCE OF TRAFFIC ..... J-286

SEQUENTIAL FLASHING WARNING LIGHTS (ILLINOIS TOLLWAY) ..... J-291

JUNCTION BOX, STAINLESS STEEL, ATTACHED TO STRUCTURE, 18"X18"X8" ... J-293

WOOD POLE, 45 FEET, CLASS 2 ..... J-294

STANDBY GENERATOR AND AUTOMATIC TRANSFER SWITCH ..... J-295

TEMPORARY PORTABLE GENERATOR ..... J-320

WELL HOUSE ELECTRICAL WORK ..... J-331

BUILDING INSPECTIONS ..... J-349

ITS POLE MOUNTED ENCLOSURE, ITS ASSEMBLY (CCTV OR MVDS)
(ILLINOIS TOLLWAY) ..... J-350A

ITS DISCONNECT SWITCH ASSEMBLY ..... J-350H

CLOSED CIRCUIT TELEVISION (CCTV) CAMERA, ITS ASSEMBLY
(ILLINOIS TOLLWAY) ..... J-351

FIBER OPTIC COMMUNICATIONS, ITS ASSEMBLY (ILLINOIS TOLLWAY) ..... J-360A

MAINTAIN INTELLIGENT TRANSPORTATION SYSTEMS (ILLINOIS TOLLWAY) ..... J-360I

ITS ELEMENT SITE GROUNDING (ILLINOIS TOLLWAY) ..... J-360M

WEBCAM ..... J-361

CONTRACT SPECIFIED EXTRA WORK ITEMS ..... J-364

CONTRACT ADJUSTMENT ALLOWANCE FOR TEMPERATURE CONTROL OF
CONCRETE (ILLINOIS TOLLWAY) ..... J-365

CONTRACT ALLOWANCES (ILLINOIS TOLLWAY) ..... J-366

ALLOWANCE FOR UNFORESEEN EROSION CONTROL MEASURES ..... J-367

CONTRACT ALLOWANCE FOR COLD WEATHER PAVEMENT MARKINGS
(ILLINOIS TOLLWAY) ..... J-368

ALLOWANCE FOR UNSUITABLE SOIL ..... J-369R

CONTRACT ALLOWANCE FOR CONSTRUCTION WORKS APPRENTICES (ILLINOIS TOLLWAY) ..... J-370

ALLOWANCE FOR SUPPLEMENTAL FLAGGING ..... J-372

ALLOWANCE FOR RAILROAD FLAGGING AND SERVICES ..... J-373

ALLOWANCE FOR STEEL COSTS ADJUSTMENT (ILLINOIS TOLLWAY) ..... J-374

STEEL COST ADJUSTMENT (ILLINOIS TOLLWAY)(RETURN FORM WITH BID) ..... J-375

ALLOWANCE FOR FUEL COSTS ADJUSTMENT (ILLINOIS TOLLWAY) ..... J-379

FUEL COST ADJUSTMENT (ILLINOIS TOLLWAY) (RETURN FORM WITH BID) ..... J-380

CONTRACTOR'S QUALITY PROGRAM (ILLINOIS TOLLWAY) ..... J-384

HANDHOLE FOR SINGLE MODE FIBER OPTIC CABLE ..... J-385

SUBGRADE AGGREGATE (ILLINOIS TOLLWAY) ..... J-386

SEDIMENT FILTER BAG ..... J-389

FLOC LOG ..... J-390

IN-LINE FLOCCULATION SYSTEM ..... J-392

ARTICULATED CONCRETE BLOCK REVETMENT SYSTEM (ILLINOIS TOLLWAY) . J-394

AGGREGATE SUBBALLAST (SPECIAL) ..... J-399

TELEVISION INSPECTION OF SEWER (ILLINOIS TOLLWAY) ..... J-402

REMOVAL OF EXISTING NOISE ABATEMENT WALL ..... J-404

PERFORMANCE BASED NOISE ABATEMENT WALL (PRECAST CONCRETE)(CTS) ..... J-406

FORM LINER SIMULATED LIMESTONE SURFACE AND FORM LINER MOCKUP (CTS) ..... J-427

CONCRETE MEDIAN BARRIER TRANSITION, TYPE V-F ..... J-435

SUPPLEMENTAL TRAFFIC CONTROL DEVICES (ILLINOIS TOLLWAY) ..... J-436

SUPPLEMENTAL MAINTENANCE OF TRAFFIC (ILLINOIS TOLLWAY) ..... J-438

LATE SEASON TEMPORARY PAVEMENT MARKINGS (ILLINOIS TOLLWAY)..... J-439

REMOVE AND REINSTALL MILEPOST MARKERS ..... J-440

PAVEMENT MARKING AND MARKER REMOVAL (ILLINOIS TOLLWAY)..... J-441

UNDERGROUND CONDUIT, COILABLE NON-METALLIC CONDUIT, SDR 11 (ILLINOIS TOLLWAY) ..... J-443

CONCRETE SERVICE PAD (ILLINOIS TOLLWAY) .....J-445A

REMOVE AND REINSTALL LIGHTING UNIT ..... J-446

CURED-IN-PLACE PIPE LINER ..... J-447

LOCATOR TRACER WIRE .....J-450A

DEWATERING, SPECIAL ..... J-451

ASPHALT MIXTURE LONGITUDINAL JOINT DENSITY MODIFIED (ILLINOIS TOLLWAY)..... J-454

FINE AGGREGATE FOR ASPHALT MIXTURES (ILLINOIS TOLLWAY)..... J-455

RECLAIMED ASPHALT PAVEMENT (RAP) (ILLINOIS TOLLWAY) ..... J-456

RECLAIMED ASPHALT SHINGLES (RAS) (ILLINOIS TOLLWAY) ..... J-467

IDOT RECURRING CHECKSHEET .....RECURRING-1

MANHOLES, VALVE VAULTS, AND FLAT SLAB TOPS (BDE).....BDE-1

TEMPORARY PAVEMENT MARKING (BDE).....BDE-2

DRILLED SHAFTS ..... GBSP-1

CROSSHOLE SONIC LOGGING TESTING OF DRILLED SHAFTS ..... GBSP-11

MEMBRANE WATERPROOFING SYSTEM FOR BURIED STRUCTURES ..... GBSP-15

PIPE UNDERDRAINS FOR STRUCTURES ..... GBSP-17

Throughout construction, the Contractor will be required to set up a track monitoring program to detect track settlement or movements within the limits of disturbed soils as part of this contract. Lateral and vertical readings must be taken, to an accuracy of 0.001 feet. Top of track readings shall be taken at 50-ft intervals in areas where small amount of new embankment fill is placed, and at 25-ft centers where large amounts of embankment fill is placed, or as directed by the Engineer. In addition, along the length of each sheet piling segment a minimum of three cross sections shall be recorded. Each cross-section shall monitor the top of the piling and the top of each rail. Additionally, the Contractor shall monitor the settlement or movement of the existing abutments. Lateral and vertical readings must be taken at three points on each abutment. These readings will be dated, recorded, and reported to the Engineer. The frequency of readings shall be daily to detect any movements so that corrective measures can be initiated immediately. The track monitoring for the shoring system and the monitoring of the existing abutments shall continue until final grade conditions are complete. The monitoring program, including a plan showing the location of all monitoring points, must be reviewed and approved by the Engineer. The work associated for track monitoring will not be measured for payment.

Railroad Crossing Identification Information
DOT/AAR Crossing #: 079518E
Railroad Mile Post: 16.01
RR Division: Chicago
City/County/State: Hinsdale & Western Springs/DuPage and Cook/Illinois

Contact information listed below.

Burlington Northern Santa Fe Railway Co. (BNSF)

Jones Lang LaSalle Brokerage, Inc.
Attn: Permit Services
4200 Buckingham, Ste.110
Ft. Worth, TX 76155
P: (817) 230-2600
F: (817) 306-8265
Temporary Occupancy Permit Application Fee: $800 (Plus anticipated expedited fee of approximately $7,500.00).
Temporary Occupancy Permit: $5,000 (estimated, to be determined by Railroad At time of Permit Approval).
Private Crossing Permit Fee: $800
Flagging: $1,300/Normal Day (additional fee applies for overtime)

The Contractor shall submit the Temporary Occupancy Permit Application (also referred to as Right of Entry Permit) within 5 days of receiving Notice to Proceed.

Additional information provided for convenience. However, the Contractor shall be responsible to verify the accuracy of the information by checking the BNSF website at the following link: http://www.bnsf.com/about-bnsf/faqs.html

Contractor shall note that the flagging services require one hour of set-up and one hour of take down every day in addition to the Contractor's work time.

## S.P. 118 RIGHT-OF-WAY

Proposed right-of-way and easements for the performance of the Work may not be available when Notice to Proceed is issued. The Contractor shall verify the status of right-of-way parcels to be acquired prior to the preparation of the Baseline Schedule. The Baseline Schedule should reflect construction sequencing necessary to work only within acquired right-of-way parcels, and the Contractor shall take all appropriate measures to ensure that construction operations do not encroach on parcels not acquired. The Contractor shall be required to adjust the work schedule as needed to coincide with parcel acquisition from time to time to work only within available right-of-way, and shall prepare revised Baseline Schedule(s) in compliance therewith as directed by the Engineer.

The final configuration of the Project Right-of-Way requires the acquisitions of several land parcels. This listing identifies these individual parcels and provides the acquisition status. The Contractor's bid proposal shall have been submitted with the understanding that access to the proposed right-of-way and easements will be provided no earlier that the date indicated in the "Projected Acquisition Date" column in the table below.

| Parcel ID # | Projected Acquisition Date | Actual Acquisition Date |
|---|---|---|
| TW-5-16-067* | August 2, 2019 | |
| TW-5-16-068 | August 2, 2019 | |
| TW-5-16-070 | August 2, 2019 | |
| TW-5-16-134** | October 1, 2019 | |

* Contractor will not have access to the temporary easement located within the tennis courts and cannot disrupt tennis court operations until September 3, 2019. Other work within the parcel will be allowed as approved by the Engineer. Modifications to the temporary fence location may be required to work in this parcel prior to September 3, 2019.

**Access to the temporary easement is contingent upon the BNSF Railroad approval of the Contractor's Temporary Occupancy Permit.

However, the Illinois Tollway reserves the right not to issue the Notice to Proceed until sufficient right-of-way, as deemed by the Engineer, is available for commencement of the Work. In any event, there shall be no damages or additional compensation due to the Contractor for delays due to delay in furnishing the right-of-way, and the Contractor's sole remedy, where applicable, shall be an extension of time.

## S.P. 119 AVAILABLE GEOTECHNICAL INFORMATION

The following is a listing of the geotechnical reports prepared by Wang Engineering, Inc., that are available for review at the office of the Illinois Tollway On-line Plan Room.

excavated or removed and replaced with material as shown on the plans. Unsuitable material shall not be used in embankments. All excess material meeting the requirements for disposal at a CCDD or uncontaminated soil facility shall be disposed of as such, and the Contractor shall provide a properly signed and sealed IEPA Form LPC 663 in order to allow for proper disposal of these materials. In the event this material is determined to be Non-Special or Special Waste, it shall be measured for payment according to Tollway Supplement Specification Article 109.04. The contractor shall produce and deliver to the Tollway a Non-Special Waste Certification meeting the requirements of Article 669.10.

Suitable excavated materials of any moisture content shall not be wasted without permission of the Engineer. The Contractor shall dispose of all surplus, unsuitable materials, and organic waste, in such a manner that public or private property will not be damaged or endangered. Suitable but excessively moist excavated materials if used for embankment may be treated in accordance with the Illinois Tollway special provision for Embankment to obtain the specified compaction levels.

Suitable earth, stones and boulders naturally occurring within the right-of-way may be placed in fills or embankments in lifts and compacted according to the Special Provision EMBANKMENT located elsewhere within these Special Provisions. Broken concrete pavement and structural concrete excavated from the job-site without protruding metal bars, bricks, rock stone, sand or soils generated from the construction activities shall be transported to processing stations or mobile crushers for the material to be crushed and screened as either a porous granular embankment aggregate, a porous granular subbase aggregate, a recycled coarse aggregate for concrete pavements, or as a recycled coarse aggregate for cement treated bases. Broken concrete from other sources may be used in embankment or in fill. Reclaimed asphalt pavement with no expansive aggregate (such as steel slag or blast furnace slag), or uncontaminated dirt and sand generated from construction or demolition activities may be used in embankment or in fill In areas supporting roadway pavement (not permitted to be used as embankment supporting the permanent or shoo-fly railroad) the placement of reclaimed asphalt pavement shall only be allowed when ambient air temperature is 40°F and rising. If used in fills or embankments, these materials shall be processed, placed and compacted to the satisfaction of the Engineer; shall be buried under a minimum of 2 feet of earth cover (except when the materials include only uncontaminated dirt); and shall not create an unsightly appearance or detract from the natural topographic features of an area. Broken concrete without protruding metal bars, bricks, rock, or stone from other sources may be used as riprap as approved by the Engineer. If the materials are used for fill in locations within the right-of-way but outside project construction limits, as approved by the Engineer, the Contractor must specify to the Engineer, in writing, how the landscape restoration of the fill areas will be accomplished. Placement of fill in such areas shall not commence until the Contractor's landscape restoration plan is approved by the Engineer.

Aside from the materials listed above, all other construction and demolition debris or waste shall be disposed of in a licensed landfill, recycled, reused, or otherwise disposed of as allowed by State or Federal laws and regulations. All uncontaminated soil with a pH between 6.25 and 9.0 disposed of at a CCDD or uncontaminated soil facility requires a properly signed and sealed IEPA Form 663 provided by the Contractor.

3. Excavation and Disposal of Furnished or Borrow Embankment: All excavation and disposal of material installed as part of FURNISHED EXCAVATION, BORROW EXCAVATION, and embankment installed as part of the temporary retaining walls or other items of work, shall be classified according to Article 669.09. Contractor shall perform a SOIL DISPOSAL ANALYSIS testing in these locations for this material and at the frequencies provided in the approved Material Disposal Plan and submit test results and report manifests to the Engineer as part of the approved Material Disposal Plan that classify these soils according to 669.09. It is expected that this material will qualify for and meet the requirements for disposal at a CCDD or uncontaminated soil facility and the Contractor shall provide a properly signed and sealed IEPA Form LPC 663 in order to allow for proper disposal of these materials. In the event this material is determined to be Non-Special or Special Waste, it shall be measured for payment according to Tollway Supplement Specification Article 109.04. The contractor shall produce and deliver to the Tollway a Non-Special Waste Certification meeting the requirements of Article 669.10.

Revise the first paragraph of Article 202.07(b) to read as follows:

"(b) Measured Quantities. Earth and rock excavation will be measured in their original positions, and the volumes in cubic yards computed by the method of average end areas. The volume of any unsuitable material removed will be measured for payment in cubic yards."

Revise the fourth paragraph of Article 202.08 to read as follows:

When the contract does not contain a pay item for removal and disposal of unsuitable material or non-special waste disposal, and the item is required, it will be paid for according to Article 109.04 of the Illinois Tollway Supplemental Specifications.

Revise the twelfth paragraph of Article 669.16 to read as follows:

Payment for temporary staging, if required, will not be measured for payment.

Add the following to Article 202.08:

The preparation, revision, update, administration, and execution of the Material Disposal Plan will be paid for at the lump sum price for REGULATED SUBSTANCES PRE-CONSTRUCTION PLAN.

On-site monitoring of regulated substances will be paid for at the contract unit price per calendar day, or faction thereof, for ON-SITE MONITORING OF REGULATED SUBSTANCES.

The work of preparing, submitting and administering a Regulated Substances Final Construction Report will be paid for at the contract lump sum price REGULATED SUBSTANCES FINAL CONSTRUCTION REPORT.

When the waste material for disposal requires sampling for disposal acceptance, the

samples shall be analyzed for TCLP VOCs, SVOCs, RCRA metals, pH, flash point, and paint filter. The analysis will be paid for at the contract unit price per each for SOIL DISPOSAL ANALYSIS using EPA Methods 1311 (extraction), 8260B for VOCs, 8270C for SVOCs, 6010B and 7470A for RCRA metals, 9045C for pH, 1030 for flash point, and 9095A for paint filter. This price shall include transporting the sample from the job site to the laboratory.

The off-site disposal of uncontaminated soil including pH testing, PID verification, transportation, facility disposal fees and all other work necessary, will not be paid for but is included in the contract unit price per cubic yard of EARTH EXCAVATION. Rejected loads, shall be transported to an accepting facility at a location designated by the Engineer, at no additional cost to the Illinois Tollway.

Disposal of material classified other than CCDD or uncontaminated soil shall be measured for payment according to Tollway Supplement Specification Article 109.04.

| Pay Item Number | Designation | Unit of Measure |
|---|---|---|
| 20200100 | EARTH EXCAVATION | CU YD |
| 20201200 | REMOVAL AND DISPOSAL OF UNSUITABLE MATERIAL | CU YD |
| 66900530 | SOIL DISPOSAL ANALYSIS | EACH |
| JI669010 | REGULATED SUBSTANCES PRE-CONSTRUCTION PLAN | L SUM |
| JI669015 | ON-SITE MONITORING OF REGULATED SUBSTANCES | CAL DAY |
| JI669020 | REGULATED SUBSTANCES FINAL CONSTRUCTION REPORT | L SUM |

Sheet intentionally left blank

Sheet intentionally left blank

## PILE DRIVING ANALYZER TESTING

Description: This work shall consist of high-strain dynamic testing during their driving process of timber test piles at locations indicated on the plans or as directed by the Engineer.

High-strain dynamic testing will be accomplished according to ASTM D4945 and by attaching a minimum of four sensors near the top of the pile that transmit data by cable or wireless connection to a Pile Driving Analyzer (PDA) unit at the site. Signal matching analysis (by the CASE Pile Wave Analysis Program (CAPWAP)) of the dynamic pile testing data shall be performed on all the large diameter pipe piles to establish the pile driving acceptance criteria and determine the Nominal Driven Bearing.

The Contractor shall secure the services of a Dynamic Testing Consultant (Consultant) certified for PDA work. The high-strain dynamic testing shall be performed using a PDA (Model 8G or PAX). The Consultant shall furnish all equipment necessary for the high-strain dynamic testing such as sensors, cables, or wireless transmitters, etc.

Submittals: No later than twenty-five (25) days prior to driving the production piles, the Contractor shall submit Consultant qualification documentation, testing personnel qualification documentation, and equipment documentation for review and approval by the Engineer.

1. Consultant qualification documents shall include documentation of successful completion of at least 5 PDA testing projects within the last 3 years and documentation of experience with PDA equipment manufactured by Pile Dynamics, Inc. and the CAPWAP.
2. Testing personnel qualification documents shall be provided for the engineer who will be in charge of PDA operations and of result interpretation, either on-site or by remote connection. Testing personnel in charge of PDA operations and result interpretation shall be an engineer with a minimum of 5 years of experience and who has achieved an Advanced Level or better on the Dynamic Measurement and Analysis Proficiency Test for engineers providing high-strain dynamic foundation testing services established by Pile Dynamics, Inc. in cooperation with the Pile Driving Contractors Association.
3. Testing equipment documentation shall confirm that the equipment conforms to the requirements of ASTM D4945 and has been calibrated within the last 2 years.

The Contractor shall submit a completed "Pile Driving Equipment Data" form BBS 136 to the Engineer and Consultant to prepare the PDA. The Contractor shall also notify the Engineer in writing of the anticipated driving date(s) of the pile(s) to be high-strain dynamically tested. Both the completed form and written driving dates shall be provided to the Engineer a minimum of two weeks prior to driving the first high-strain dynamically tested pile.

Any changes to the proposed driving equipment will require resubmittal of the WEAP analysis, the manufacturer specifications for the selected hammer, and form BBS 136 in accordance with the WEAP special provision. Any resubmittal will be required to meet the same timeframes required for Engineer review and approval as the original submittal.

Any changes to the proposed driving dates shall be submitted to the Engineer for approval prior to initiating driving.

Construction: High-strain dynamic testing will be performed during the final 20 feet of driving. After lifting the pile to be monitored into the leads, the Contractor shall provide labor to access either side of the pile within the top 8 feet, or as directed by the Consultant, to attach the sensors. If the Engineer elects to conduct concurrent high-strain dynamic testing with state owned equipment, the Contractor shall provide labor to access either side of the pile within the top 8 feet, or as directed by the Engineer, to attach the sensors.

When the level of the sensors is within 1 foot of any obstruction endangering the survival of sensors and/or cables, driving shall be halted and the Contractor shall remove the sensors and reattach them after passing the obstruction. When sensors are within 1 foot of the ground surface, driving shall be halted and the Contractor shall remove the sensors and reattach them near the top of the next pile segment, after lifting into place and splicing.

Upon completion of the driving process of each high-strain dynamically tested pile, the Contractor shall provide the PDA operator(s) access to remove the sensors. If the sensors are located 10 feet or more above the ground at the end of driving, the Contractor shall provide equipment and labor to remove and provide the sensors to the PDA operator(s). After the sensors are removed, the Contractor may proceed with cutting the pile to length.

Piles terminating directly on, or in, the underlying sandstone or limestone bedrock will not require redrive.

Preliminary Reports: Within one day, the Contractor shall submit a preliminary report for each pile tested, for the Engineer's review. The preliminary report shall summarize the high-strain dynamic testing results. Each preliminary report shall include the following:

(a) Maximum force applied to the pile head.
(b) Maximum pile head velocity.
(c) Maximum energy imparted to the pile.
(d) Assumed soil damping factor and wave speed.
(e) Static capacity estimate.
(f) Maximum compressive and tensile forces in the pile.
(g) Pile integrity.
(h) Blows per inch.
(i) Stroke.

Final Report: Within seven (7) days upon completion of driving all large diameter pipe piles, the Contractor shall submit a final report of all piles tested, for the Engineer's review. This report shall include results of the pile capacities obtained from the high-strain dynamic testing and CAPWAP analysis. This report shall include the report criteria of ASTM D4945 and the following:

(a) Date of testing and date of pile installation.
(b) Pile identification number and location.
(c) All information given in the preliminary reports.
(d) At least one pile from each substructure shall include the reporting information required under Section 7.2.5 *Test Pile(s)* of ASTM D4945 in addition to the other reporting requirements.
(e) Length of pile below ground.
(f) Total Length of pile, including projection above ground.
(g) Length of pile from instrumentation position to tip.

(h) Hammer type, drop, and other relevant details.
(i) Blow selected for signal matching analysis.
(j) Maximum compressive and tensile stresses, stroke, and capacity versus penetration depth.
(k) Temporary compression.
(l) Pile integrity and location of damage, if any.
(m) Force/velocity versus time trace.
(n) Force/velocity match curve.
(o) Resistance distribution along the pile and at the pile tip.
(p) Detailed graphical and tabular results from blow analyzed using signal matching techniques and software.
(q) Pile driving acceptance criteria.
(r) Nominal Driven Bearing in Kips.
(s) Electronic copies of the original PDA data collection files, final PDA-W or PDA-S refined files, and final CAPWAP files.

Basis of Payment: This work will not be measured for payment and shall be included in the cost of TEST PILE TIMBER.

## WAVE EQUATION ANALYSIS OF PILES

**Description.** This work shall consist of conducting Wave Equation Analysis of Piles (WEAP) for the timber piles, using the latest version of the WEAP software program. The analyses assumptions and driving recommendation shall be provided to the Engineer for review and approval, to establish the pile acceptance criteria and ensure the proposed driving system will not overstress the piles.

**Submittals.** No later than twenty-five (25) days prior to driving the test or production piles at the specified location(s), the Contractor shall submit the wave equation analysis results and driving recommendations to the Engineer for review and approval.

The wave equation analysis shall be sealed by a Professional Engineer licensed in the state of Illinois having experience in the use of the WEAP program and selection of the geotechnical and hammer input parameters.

As a minimum, the Contractor shall submit the following analysis assumptions:

1. The pile type and size analyzed at each location.
2. The Nominal Required Bearing specified at each location.
3. The test pile bearing when test pile(s) are specified.
4. The batter angle(s) of any piles specified to be driven in a non-vertical alignment.
5. The proposed or anticipated total pile length and length above ground at end of driving.
6. Ground surface elevation during driving.
7. The assumed subsurface soil profile layer depths and thicknesses, location of water table, soil type and strength parameters.
8. Borings numbers used to develop the design soil profile.
9. Explanation of why any input values were selected that differ from the default values recommend by the program.
10. A completed "Hammer Data Form" documenting the proposed hammer, helmet and cushion information (see attached) or see http://www.dot.il.gov/bridges/bridgforms.html

The recommendations to be included in the submittal are to include:

1. An assessment of the proposed hammer driving system(s) ability of drive the test and production piles to their required bearings at a penetration rate between 2 and 10 blows per inch.
2. The expected stress levels in the piles at the maximum expected hammer energy and any recommended limitations on hammer energy or fuel settings to ensure the pile stresses do not exceed 90% of the pile yield stress.
3. A pile inspector's charts showing hammer stroke (ft) or Energy versus pile penetration rate (blows/inch) at the nominal required bearing, batter pile bearing and test pile bearing for each test pile specified.

A new analysis is required if the contractor makes driving system changes from what is proposed in the approved analysis.

Basis of Payment: This work will not be measured for payment and shall be included in the cost of TEST PILE TIMBER.

Structure Number: -
Pile Driving Contractor:
Abutment /Pier Number(s): Route:
Pile Type & Size(s): Section:
Nominal Required: County:
Production Pile Length(s): Closest Boring(s): Contract::

Hammer Manufacturer: Model No:
Type (diesel, air/steam hydraulic, etc.): Ram Stroke Type (fixed of Variable):
Maximum Operating Energy: Minimum Operating Energy:

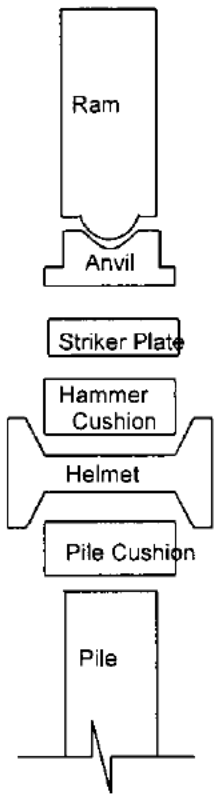


Maximum Recommended Stroke:
Minimum Measurable Stroke:
Ram Weight:

Anvil Weight:
Modifications to Hammer (if any):

Striker Plate
Diameter:
Thickness:
Weight:

Hammer Cushion Material 1
Material Type:
Diameter:
Thickness per Plate:
No. of Plates:

Hammer Cushion Material 2 (if composite)
Material Type:
Diameter:
Thickness per Plate:
No. of Plates:

Total Hammer Cushion Thickness:

Helmet (Drive Head, Pile Cap) Weight (including bonnet insert if any):

Pile Cushion (precast concrete piles only)
Material:
Thickness Per Sheet:
Area:
No. of Sheets:
Thickness Total:

Double Acting/Differential Acting Air or Steam
Hammers Net Weight:
Cylinder Net Weight:
Piston Area:

Attach Bounce Chamber Pressure vs. Equivalent Energy Graphs (Closed-End Diesel Hammers Only):

Hammer Data Completed by: Contact Phone Number:
Date Completed:

**COMBINED SEWER REMOVAL 42"**

**Description.** This work shall consist of removing combined sewer. The existing sewer may be brick, concrete or some other material. The removal shall be coordinated with the Village of Hinsdale Public Works Department and shall be completed under dry weather conditions.

**Removal.** Excavation of trenches shall be performed according to applicable requirements of Article 550.04 of the Standard Specifications. The proposed sanitary sewer shall be placed within the trench that is created by the removal of the existing combined sewer. The removed pipe shall be disposed of according to Article 202.03 of the Standard Specifications. Proposed sanitary sewer and trench backfill will be paid for separately.

**Flow Bypassing.** The Contractor shall provide the transfer of flow around the section of pipe that is to be removed. Flow bypassing will be done in accordance with the SANITARY SEWER BYPASS PUMPING special provision. Flow bypassing will be done in accordance with the SANITARY SEWER BYPASS PUMPING special provision. The 42" combination sewer normally has no dry weather base flow. During a storm event, maximum flows in the pipe have been calculated at up to 41 cfs. Construction of this sewer is recommended to be scheduled for dry weather conditions and/or piping shall be scheduled to be replaced such that no section of piping is taken out of service during a storm event.

**Method of Measurement.** This work will be measured for payment in place in feet.

**Basis of Payment.** This work will be paid for at the contract unit price per foot for COMBINED SEWER REMOVAL 42".

| Pay Item Number | Designation | Unit of Measurement |
|---|---|---|
| X0326804 | COMBINED SEWER REMOVAL 42" | FOOT |

## FURNISH AND INSTALL HANDRAIL

### DESCRIPTION

The work under this section shall include furnishing the steel Handrail including kick plates, fasteners, and washers to be installed on the bridge. The work includes furnishing all labor, material, tools, equipment and incidentals necessary to deliver and install the handrail as shown on the Plans and/or directed by the Engineer.

### OTHER SPECIFICATIONS

The following specifications are referred to in this document.:

American Railway Engineering and Maintenance-of-Way Association, Manual for Railway Engineering-updated 2016 (AREMA)

American Society for Testing and Materials, Annual Book of Standards – dated 2016 (ASTM)

American Institute of Steel Construction, Manual of Steel Construction Allowable Stress Design – Ninth Edition (AISC)

American Welding Society – Bridge Welding Code, D1.5 – dated 2015 (AWS)

### SHOP DRAWINGS

A. The Fabricator's attention is called to the requirements for shop drawings noted in Chapter 15, Article 1.1.3 Shop Drawings of AREMA Specifications.

B. The Contractor shall furnish at least three (3) complete sets of detailed shop drawings to the Illinois Tollway for approval prior to starting fabrication. Unchecked drawings shall not be submitted for approval. After approval of shop drawings, the Contractor shall supply the Illinois Tollway with one set of reproducible of the approved drawings.

C. The rejection of, or the procedure for the correction of, shop drawings will not be considered as cause for delay.

D. Original drawings and a pdf copy shall be furnished at the completion of the contract in accordance with Chapter 15, Article 1.1.3 of the AREMA Specifications. Reproducibles made by the diazo process are not acceptable. They shall be provided to the Engineer for distribution.

E. Approval by the Engineer of shop drawings shall not relieve the Contractor from furnishing material of proper dimensions, quantities and quality, nor will such approval relieve the Contractor from responsibility for errors of any sort in the shop drawings.

### MATERIALS

A. Structural Steel Shapes and Plates: ASTM A 36 or ASTM A709, Grade 36

B. HSS Sections: ASTM A500, Grade B

C. Steel Pipe: Welded and seamless, ASTM A 53, black, Schedule 80.

D. Welding Electrodes: AWS Specifications.

E. Hardware: Bolts shall be ASTM A325, Type 1 and washers shall be ASTM F436.

F. All Steel rail elements shall be galvanized according to Article 509.05 of the IDOT Standard Specifications.

**FABRICATION**

A. Shop assembled members must be welded. All welds must be ground smooth and flush with adjacent surfaces.

B. Where welding occurs, it must be by the electric arc process in accordance with American Welding Society's Code for Arc and Gas Welding in Building Construction.

C. Welding to be by operators who have been qualified previously by tests as prescribed by the American Welding Society's "Standard Qualification Procedure" to perform the work required.

D. Provide all connections necessary for complete erection.

E. No burning of steel will be permitted in the field. Members burned in the shop must be finished to an acceptable appearance, equal to a sheared finish. Holes must not be burned in either shop or field. No cutting of structural shapes must be done in the field without the consent of the Engineer.

F. Materials must be properly marked and match-marked where field assembly is required. The sequence of shipments must be such as to expedite erection and minimize the field handling of materials.

G. Use care in handling and erection to ensure that handrail will not be twisted, bent or otherwise damaged, and should any difficulty be encountered, it must be immediately reported to the Engineer.

H. After fabrication, the handrail sections shall be galvanized according to Article 509.05 of the IDOT Standard Specifications.

**INSTALLATION**

A. Steel handrails must be fabricated and assembled from steel shapes of dimension and gauge as indicated on the Plans.

B. Metal railings must be completely shop fabricated, with all runs straight and true, free from kinks and bulges between bends and having properly formed transition where any change in direction occurs. All joints must be accurately fitted and rigidly secured with hairline contact. All connections must be welded, with all exposed welds ground down smooth to blend with adjacent parent metal. All edges of horizontal and vertical plates and bars exposed to touch must be slightly rounded. Handrails must be delivered to the job site as shop assembled, requiring only a minimum fitting when installed.

## FENCE (SPECIAL)

**Description.** This work shall consist of the complete design, submittal of Working Drawings, furnishing and installing all materials, labor, and equipment necessary to construct a 16-foot high fence at the locations shown in the Plans, in accordance with this Special Provision, the Standard Specifications, and the Contractor's accepted Working Drawings.

The fence shall be SimTek manufactured by CertainTeed or approved equal and shall coordinate the procurement with the Engineer and the Village of Hinsdale. The fence consists of panel, posts, post caps, hardware required to mount the fence including fasteners, foundations and foundation anchor assemblies. The posts shall be constructed galvanized steel.

### REFERENCED STANDARDS

In addition to the Illinois Department of Transportation Standard Specifications and Supplemental Specifications (latest edition), the following specifications and standards shall govern the design, fabrication and construction of Fence.
The standards and specifications shall be the latest edition as revised to the date of the Advertisement for Bids.

1. AASHTO LRFD Bridge Design Specifications, 8th Edition Dated September 2017.

2. AASHTO Standard Specifications for Transportation Materials and Methods of Sampling and Testing.

3. Illinois Department of Transportation All Geotechnical Manual User Memo 11.1: Light Tower, Traffic Signal, Sign Structure Foundation Design, September 2011.

4. Underwriters Laboratories, Inc. (UL):
   a. Building Materials Directory

5. International Conference of Building Officials (ICBO)

6. International Building Code (IBC), 2018 or latest edition, and State of Illinois amendments, referred to herein as Building Code.

7. Illinois Tollway Structure Design Manual, Latest Edition.

Should a conflict occur between the Standard Specifications and another requirement, the Standard Specifications shall govern.

### GENERAL REQUIREMENTS

1. In addition to the complete design and preparation of Working Drawings for the fence, this work shall include a supplemental soil exploration and testing program if required for design refinement. A subsurface soil exploration and testing program has been conducted in the project area. In addition to the boring logs provided in the Contract Plans, the reports, containing the investigations, findings, and recommendations, are available for review on the Illinois Tollway on-line Plan Room. If additional information is required, the Contractor is responsible for obtaining the information at no additional cost to the Illinois Tollway.

2. The Contractor shall identify the Design Consulting Firm, Manufacturer or Supplier of

Fabrication, construction and erection of the fence shall be accomplished in accordance with the details shown on the approved Working Drawings, this Special Provision, the Standard Specifications, as recommended by the System Supplier, and as approved by the Engineer. Hardware and fasteners shall be installed in accordance with the System Supplier's recommendations and as approved by the Engineer.

Structural steel shall be fabricated and erected in accordance with Section 505 of the Standard Specifications, the System supplier's recommendations and as approved by the Engineer. Shop cleaning and preparation of steel surfaces shall be prepared in accordance with ASTM D6386 after galvanizing. The furnishing, application, and protection of the paint coatings shall be as specified in Standard Specification Section 506 and the paint manufacturer's recommendations. Structural steel coatings shall be according to Section 1008. The first coat shall meet the requirements of Article 1008.05 (d) of the Standard Specifications. The second coat shall meet the requirements of Article 1008.05 (e) except the color shall be a color created by the paint manufacturer that matches the color of the fence panel. The galvanized and two coat paint system shall meet all the requirements of Article 1008.05 (f) of the standard specifications. The coating system shall be evaluated for performance through the National Transportation Product Evaluation Program (NTPEP) for Structural Steel Coatings following the requirements of AASHTO R31 and shall meet the performance criteria listed herein.

**Excavation and Backfill**
Drilled shafts foundations shall be constructed in accordance with Section 516 of the Standard Specifications.

If Unsuitable Material is present at or below the foundation level, it shall be removed per Section 202 of the Standard Specifications. Unsuitable Material shall be any soil material containing vegetable or organic material, such as mulch, peat, or debris such as wood, glass, concrete and brick pieces. In addition to the locations shown on the Plans, Unsuitable Material shall also be any material determined to be unsuitable by the Engineer. Soils classified as Pt, OH, OL, and MH as per the United Soil Classification System shall also be considered Unsuitable Material. All open trenches and holes resulting from excavation, placement of the posts shall be protected.

Underground utilities shall be located and marked to verify adequate clearance from foundations. The Contractor shall consider OSHA clearances for excavations, and overhead obstructions such as wires, cables and roadway/area lighting, prior to wall erection.

**Method of Measurement.** This work will be measured for payment in place in feet along the top of the fence from center to center of end post.

**Basis of Payment.** This work will be paid for at the contract unit price per foot for FENCE (SPECIAL). The top of fence panel shall measure 16-feet high from finished ground surface. The Fence (Special) shall include fence panels, posts and post caps of same material, color, and type, hardware, fasteners, foundations and foundation anchorage, drilling of foundation, disposal of suitable material, all equipment and labor required to complete the work.

Non-Special Waste disposal and soil testing will be paid for according to the Special Provision EARTH AND ROCK EXCAVATION.

| Pay Item Number | Designation | Unit of Measure |
|---|---|---|
| X2200003 | FENCE (SPECIAL) | FOOT |

## MANHOLE, SANITARY, 8'-DIAMETER, TYPE 1 FRAME, CLOSED LID

**Description.** This work shall consist of constructing sanitary manholes of the size specified, together with the necessary cast iron frames and lids, in accordance with the details shown on the plans. The work shall include furnishing and installing an internal chimney seal, butyl rope mastic joint seal and an external joint wrap at each barrel section joint in accordance with details shown on the plans.

**General.** Manholes constructed over proposed or existing sanitary sewer, which are indicated on the plans as sanitary manholes, shall be provided with rubber gasketed couplings to ensure a watertight seal between pipe and manhole in accordance with details shown on the plans. The rubber gasketed couplings shall conform to ASTM Specification C-923. Sanitary manholes shall be provided with steps in accordance with details shown on the plans. The rubber gasketed couplings and steps shall be included in the cost of sanitary manholes and will not be paid for separately.

Type 1 frame, closed lid shall be used on all manholes. Lids for sanitary manholes shall be watertight, self-sealing, with a concealed pick-hole and have the word "SANITARY" cast into them.

The Contractor is responsible for tying in all existing sanitary sewers to the proposed structure as required. Up to 10 feet of new sewer (if required) for each existing sewer tying into the proposed structure shall be included in this pay item. The Contractor shall be responsible for verifying the size, inverts and locations of the existing sewers to be connected to the proposed structure. Any existing sanitary sewers that are damaged during construction shall be replaced in kind by the Contractor at no cost to the contract. In addition, the Contractor will be responsible for determining which structures require precast concrete flat slab tops in accordance with Standard Drawing 602601. Flat slab tops will only be allowed where a conical section cannot be installed due to a lack of clearance.

MH101 shall include replacement of existing 8" diameter SDR 35 PVC casing and 2" diameter Sch. 80 PVC piping between MH101 and existing manhole approximately 50 feet south of MH101. Cost of furnishing and installing new 8" and 2" Dia. PVC piping shall be included in cost of Manhole, Sanitary, 8' Diameter, Type 1 Frame, Closed Lid.

**Testing.** Sanitary manholes shall be tested for water tightness in accordance with ASTM Specification C-1244.

**Method of Measurement.** This work will be measured for payment in units of each of the diameter specified.

**Basis of Payment.** This work shall be paid for at the contract unit price per each for MANHOLE, SANITARY, TYPE 1 FRAME, CLOSED LID, of the diameter specified.

| Pay Item Number | Designation | Unit of Measure |
|---|---|---|
| X6022850 | MANHOLE, SANITARY, 8' DIAMETER, TYPE 1 FRAME, CLOSED LID | EACH |

## SANITARY MANHOLES TO BE REMOVED

**Description.** This work shall consist of removing sanitary sewer manholes. This work shall be completed in accordance with applicable portions of Section 602 of the Standard Specifications and the provisions below.

**Construction Requirements**. The manholes shall be removed for the full depth of the structure. Any damage to existing pipes to remain shall be repaired by the Contractor as approved by the Engineer at no additional cost to the Tollway.

R103 contains 8" and 2" PVC piping related to Village chlorine injection piping. This 8" and 2" PVC piping shall be removed between MH101 and the existing manhole approximately 50 feet south of MH101 and the removal included in the cost of the work for Sanitary Manholes to be Removed. Replacement of 8" and 2" PVC piping shall be paid for under Manhole, Sanitary, 8' Diameter, Type 1 Frame, Closed Lid.

**Method of Measurement.** This work will be measured for payment in units of each.

**Basis of Payment.** This work shall be paid for at the contract unit price per each for SANITARY MANHOLES TO BE REMOVED.

| Pay Item Number | Designation | Unit of Measure |
|---|---|---|
| X6026054 | SANITARY MANHOLES TO BE REMOVED | EACH |

## SANITARY SEWER BYPASS PUMPING

**Description.** This work shall consist of bypass pumping the combined sewer flow during removal and replacement of the pipe.

**Flow Bypassing.** The Contractor shall provide for the transfer of flow around the section of pipe that is to be removed. The bypass shall be made by diversion of the flow at an existing upstream access point and pumping the flow into a downstream access point. The pump and bypass lines shall be of adequate capacity and size to handle the flow. The proposed bypassing system shall be approved in advance by the Engineer. Flow bypassing shall continue until the new sanitary sewer is completed and approved for use. The 42" combination sewer normally has no dry weather base flow. During a storm event, maximum flows in the pipe have been calculated at up to 41 cfs. Construction of this sewer is recommended to be scheduled for dry weather conditions and/or piping shall be scheduled to be replaced such that no section of piping is taken out of service during a storm event.

**Method of Measurement.** This work will not be measured for payment.

**Basis of Payment.** This work will be paid for at the contract unit price per lump sum for SANITARY SEWER BYPASS PUMPING.

| Pay Item Number | Designation | Unit of Measurement |
|---|---|---|
| XX004360 | SANITARY SEWER BYPASS PUMPING | L SUM |

## JUNCTION CHAMBER, LOCATION 1

**Description.** This work shall consist of a furnishing all labor, equipment and material necessary to construct a cast-in-place reinforced concrete Junction Chamber. This item shall include excavation and backfilling, membrane waterproofing system and geocomposite wall drain, temporary soil retention system if required and the design, furnish and installation of a temporary bulkhead as shown on the plans and as specified herein.

**Materials.** Materials for the junction chamber shall be in accordance with applicable portions of Section 602 of the Standard Specifications.

Precast concrete products shall be according to Article 1042.05. The concrete mix design specifications and material proportions shall be determined by the Contractor. Before the work begins, the concrete mix design specifications, material proportions, and aggregate gradations shall be submitted for review and approval.

## CONSTRUCTION REQUIREMENTS

The structure shall be constructed at the line and grade shown on the plans. The work shall include forming, furnishing and placement of Portland Cement Concrete and reinforcing steel as required to construction the junction chamber and the associated wingwalls as shown on the plans. The work shall include excavation and backfilling.

Excavation shall be to the established bottom of the foundation as shown in the Plans or directed by the Engineer. The surface shall be firm and smooth. If soft or yielding material is encountered at this elevation, it shall be removed and back filled with suitable material, thoroughly compacted in place to the satisfaction of the Engineer.

Any temporary soil retention required to support the faces of excavation during construction shall not be paid for separately, but will be included for payment in this work.

Cast-in-place concrete work shall be performed according to the applicable portions of Section 503 and Section 1020 for concrete placement of the Standard Specifications. All reinforcement shall be furnished and installed in accordance with Section 508 of the Standard Specifications.

Membrane waterproofing shall be according to the Guide Bridge Special Provision Membrane Waterproofing for Buried Structures. Geocomposite wall drain shall be according to applicable portions of Section 591 of the Standard Specifications. The membrane waterproofing system and wall drain shall be placed on the top slab, and the top 1 foot of the sidewalls of the junction chamber.

Unsuitable material and suitable material in excess of that required for backfilling shall be disposed of by the Contractor according to Article 202.03.

Precast concrete products shall be according to applicable portions of Section 504 and Article 1042.05. The concrete mix design specifications and material proportions shall be submitted for review and approval by the Contractor before the work begins.

The Contractor shall submit calculations, drawings and details for the design and construction of the temporary bulkhead sealed and signed by an Illinois licensed Structural Engineer employed by the Contractor for Engineer review and approval. Indicate loads, codes and specifications to confirm that the design conforms to the applicable codes and design requirements. The submittal must be approved prior to the commencement of this work. Engineer review shall not relieve the Contractor of his responsibility for the design of the temporary bulkhead. The bulkhead design shall consider loads from the backfill against the temporary bulkhead with the junction chamber empty. The design shall also consider the future removal of the temporary bulkhead, which shall not disturb the junction chamber structure to remain.

The temporary bulkhead shall be installed according to the approved design by the Contractor.

**Method of Measurement.** This work will be measured for payment, in place, in units of each. Box culverts and inlet pipes imbedded in the walls will be measured for payment as specified in Section 540 and Section 542 or in other applicable sections of these Specifications. Except for box culverts and pipes imbedded in the walls, all material furnished and placed, and all work performed in the construction of junction chambers will be considered as being included in the measurements for payment described above, and no separate measurement will be made for any other material or work involved.

**Basis of Payment.** This work will be paid for at the contract unit price for each for JUNCTION CHAMBER NO. 1.

| Pay Item Number | Designation | Unit of Measure |
|---|---|---|
| JI602791 | JUNCTION CHAMBER, LOCATION 1 | EACH |

**ITS POLE MOUNTED ENCLOSURE, ITS ASSEMBLY (CCTV or MVDS) (Illinois Tollway)**

**Effective: January 15, 2015**
**Revised: March 1, 2019**

**DESCRIPTION:**

This work shall consist of furnishing, installing, calibrating and testing of the ITS Pole Mounted Enclosure (CCTV or MVDS) per the contract plans and as directed by the Engineer, and as part of a fully functional ITS site.

The work under this specification shall be in association with the installation of an ITS device pole, electrical service, grounding, CCTV Camera ITS Assembly, and communications.

**MATERIALS**

The main components of the system are as described below. All other ancillary connection cables, circuit breakers, brackets, and all other items required for the installation of a fully functional ITS Pole Mounted Enclosure, as shown on drawing(s).

- Enclosure
  - Enclosure Cabinet
  - Control Power Transformer
  - Grounding Bar System
  - Cisco Switch with Power Supply
  - Surge Suppressors
  - Ethernet Relay
  - Single Mode Fiber Small Form-Factor Plug (SFP) Module
  - 24 VDC Power Supply
- Concrete Service Pad
- Grounding System

The following are the specific materials for the system component described above:

- Enclosure. The Enclosure Cabinet shall be a NEMA 4X Stainless Steel, 36" H x 30" W x 12" D enclosure manufactured by Hoffman, model A36H3012SS6LP. The enclosure shall be ordered with a 33" x 27" panel manufactured by Hoffman, model A36P30.
  - The enclosure shall be mounted using a pole mounted kit manufactured by Hoffman, model CPMK30.
  - The Control Power Transformer shall be a 1000 VA from a 208/240/480 to 120 volt power transformer manufactured by Square D model 9070 Type T1000D95 or equivalent.
  - The Grounding Bar System shall be a Hoffman model PGS2K or equivalent
  - The Cisco Switch with Power Supply shall be a Cisco IE-4000-8GT8GP4G-E switch with PWR-IE170W- PC-AC= power supply
  - The 120 VAC Surge Suppressor shall be manufactured by Cooper Crouse Hinds model MA15/D/1/SI.
  - The Power Controller, 8-Channel DIN Ethernet Relay shall be a Digital Loggers model DIN 4

- A terminal block manufactured by Allen Bradley, model 1492-CD8
- A SMF patch panel with LC connectors, Fiber Connections, Inc. Gator Patch model G420U008LAN-XXX-0, substituting "XXX" with the appropriate length of pigtail. The pigtail length of the Gator Patch shall be of a sufficient length as scheduled on the plans, 100 meters minimum, or as directed by the Engineer to accommodate slack requirements to properly splice and store the cable.
- Single Mode Fiber Small Form-Factor Plug (SFP) Module shall be a Cisco 1Gbps transceivers Model GLC-LX-SM-RGD
- The 24 VDC Power Supply shall be a Click 204 AC/DC power supply manufactured by Wavetronix or Lambda DSP100-24.

- The concrete service pad shall be 5-inches thick and constructed using class SI concrete in accordance with Article 1020.04 of the Standard Specification, except that the minimum 14-day compressive strength of shall be 4000 psi.
- All work associated with the external ground system and connections made internally to the ITS Pole Mounted Enclosure (CCTV or MVDS) shall be according to the special provision "ITS ELEMENT SITE GROUNDING".

The Contractor shall submit to the Engineer a request for variance when changing equipment provided on the Submittal ITS POLE MOUNTED ENCLOSURE (CCTV OR MVDS) attached to this special provision. The variance shall be the formal request of an approval of an equal or better substitute for a specified part by providing justification and supporting manufacturer's specifications and other relevant documentation.

**CONSTRUCTION REQUIREMENTS**

The Contractor shall closely coordinate with the Engineer. This includes, but is not limited to, the following:

**Pre-Procurement Documentation Approval**

- The Contractor shall submit for approval to the Engineer, within 10 business days from NTP, a detailed schedule showing dates for: product submittals and approvals; device configuration by the Illinois Tollway; construction/installation; calibration; testing; burn-in period; and warranty of each ITS Pole Mounted Enclosure (CCTV or MVDS). This detailed schedule shall be included in the project schedule, as required per Illinois Tollway Supplemental Specifications Article 108.02. Schedules for each ITS Pole Mounted Enclosure (CCTV or MVDS) to be deployed within the larger construction contract and shall be staggered based on resources to be employed.
    - If this installation is part of a larger ITS deployment or construction project, then the furnishing, installation, calibration and testing of the ITS Pole Mounted Enclosure (CCTV or MVDS) site(s), shall be specifically noted in the overall project schedule.
- The Contractor shall submit for approval to the Engineer, within 10 business days from NTP, a completed Contractor ITS POLE MOUNTED ENCLOSURE (CCTV OR MVDS) Checklist and associated submittals.

The Contractor shall make all submissions to the Engineer through the Illinois Tollway's Web Based Project Management (WBPM) system.

The Contractor must obtain approval of the schedule, catalog cut sheets, cabinet wiring diagrams, and calculations from the Engineer prior to purchasing any equipment and subsequently performing the installation per the approved documents, contract plans, and specifications.

**Pre-Installation Requirements**

- Thirty (30) days prior to the scheduled field installation of each ITS Pole Mounted Enclosure (CCTV or MVDS), the Contractor shall deliver the Cisco communication switch to the Illinois Tollway's Central Administration (CA) Building for configuration and labeling prior to installation by the Contractor. The IP Relay shall be programmed by the Contractor.
    - The Contractor shall provide an A-14 form to the Engineer during acceptance of the switch at CA showing the equipment, each equipment specific serial number, and the field location of each piece of equipment. This form will be signed by both the Engineer and the Contractor.
    - The Contractor shall take possession of the Cisco communication switch from the Illinois Tollway upon notification by the Engineer of configuration and labeling completion.

**ITS Pole Mounted Enclosure (CCTV or MVDS) Installation**

- The Contractor shall install the ITS Pole Mounted Enclosure (CCTV and MVDS) on a pole and foundations that are installed outside the clear zone or in areas shielded by guardrail.
    - The ITS Pole Mounted Enclosure (CCTV and MVDS) shall be oriented on the pole perpendicular to the roadway, such that a worker who faces an opened cabinet is also facing the direction of approaching traffic.
    - The ground rod shall be connected to the exterior of the ITS Pole Mounted Enclosure (CCTV or MVDS) pole at the Master Ground Bus Bar (MGB).
    - All associated conduit, wire, power service feeds, circuit breakers, brackets, etc. as shown on the contract plans, and all items and workmanship required to successfully pass the Site Test stated within this specification, will be the sole responsibility of the Contractor and incidental to this pay item.
    - The subgrade for the concrete service pad shall be prepared in accordance with Article 424.04 of the Standard Specifications.

**TESTING**

The Contractor shall be required to perform the following tests after the installation of the ITS Pole Mounted Enclosure (CCTV or ITS). The Contractor shall use the test plans within this special provision to conduct the following tests in the presence of the Engineer.

- First Unit Factory Visual Inspection
- Site Test
- System Test
- 30-Day Burn-in Period
- Final System Acceptance and Training

**First Unit Factory Visual Inspection**

The Contractor (or the Contractor's equipment fabricator) shall completely assemble an ITS Pole Mounted Enclosure (CCTV or ITS) unit which includes the cabinet, all equipment, modules, components and complete all internal wiring (including labeling), then provide 5 business days'

notice that this unit is ready for inspection. The Contractor shall have one set of contract plans and two sets of shop drawings on site to be redlined with any discrepancies noted. One set of redlines will be retained by the Illinois Tollway. The Contractor shall follow the Illinois Tollway ITS Labeling Guide for all labeling of components. The manual can be found on the Illinois Tollway's main website. The Contractor may optionally perform an AC power test in the shop following successful completion of the Factory Visual Inspection.

In lieu of the Factory Visual Inspection, the Contractor can obtain from the manufacturer a product validation certification illustrating that the manufacturer has followed their quality processes and verifies that the unit meets the specifications for operations. This certificate must be submitted to the Engineer for review and approval for the Factory Visual Inspection acceptance.

**Site Testing**

The purpose of the Site Test is to have the Contractor demonstrate to the Engineer that all ITS Pole Mounted Enclosure (CCTV or MVDS) components have been installed, connected, labeled, and configured correctly as per contract plans and as per the manufacturer's requirements, utilizing quality workmanship. This installation shall result in an enclosure that can accept various ITS modules (CCTV, MVDS, Wireless and Fiber Optic) to create a fully functional ITS site.

The Site Test shall be performed in conjunction with all associated equipment installed at a common site, including but not limited to the following elements. A Site Test shall not be performed at the element or component level. Site Tests shall be performed for all relevant elements at a common site, meeting any Site Test requirements specified for each element.

- CLOSED CIRCUIT TELEVISION (CCTV) CAMERA, ITS ASSEMBLY
- MICROWAVE VEHICLE DETECTION SYSTEM (MVDS), ITS ASSEMBLY
- ITS POLE MOUNTED ENCLOSURE, ITS ASSEMBLY (CCTV or MVDS)
- FIBER OPTIC COMMUNICATIONS, ITS ASSEMBLY
- WIRELESS COMMUNICATIONS, ITS ASSEMBLY
- STATIC SIGN FLASHING BEACON ASSEMBLY INSTALLATION
- SOLAR POWERED GENERATOR ASSEMBLY
- CO-LOCATED SOLAR POWERED GENERATOR ASSEMBLY
- ITS ELEMENT SITE GROUNDING
- MONOPOLE CLOSED CIRCUIT TELEVISION (CCTV) CAMERA TOWER ASSEMBLY

For the Site Test to be accepted, the Contractor shall demonstrate to the Engineer that:

- The installation has been performed as per contract plans and as per the manufacturer's recommendations.
- All enclosure components are properly wired and demonstrate continuity and correct grounding utilizing good workmanship.
- The enclosure is attached/orientated to the pole and properly grounded.
- All conduits are secured and sealed, as required.
- All enclosure components demonstrate correct input and/or output voltages when powered/unpowered.
- All connections are tight and cannot be dislodged by incidental contact from the Engineer.
- All ITS Pole Mounted Enclosure (CCTV or MVDS) equipment inside the enclosure shall be properly labeled as per the ITS Labeling Guide (located on the Illinois Tollway website).

**System Test**
The System Test shall be conducted by the Illinois Tollway, once the ITS Pole Mounted Enclosure (CCTV or MVDS) is installed along with CCTV and/or MVDS devices to complete a fully operational ITS site.

The System Test demonstrates that the ITS Pole Mounted Enclosure (CCTV or MVDS) and associated field devices can be operated at the Traffic Operations Center (TOC) utilizing the Traffic Information Management System (TIMS) software.

For the System Test to begin, the Contractor shall demonstrate to the Engineer that:

- The ITS site is ready for System Testing, by notification in writing (via WBPM) to the Engineer within 5 days of the requested start of test.
- Contractor has requested the Engineer to notify the TOC Manager when the ITS Pole Mounted Enclosure is ready to test.

System Test Acceptance of the ITS Pole Mounted Enclosure:

- Project pre-final walk-through has been successfully completed by the Illinois Tollway's ITS General Engineering Consultant (GEC).
- TOC Manager to sign off that the ITS Pole Mounted Enclosure is integrated and tested for:
  - Communications connectivity from TIMS to each ITS Pole Mounted Enclosure (CCTV or MVDS) switch and associated ITS device (CCTV and/or MVDS).
  - Accurate video and data transmission from each ITS site to TIMS.
- Contractor received documentation from the Engineer of written approval (via email) from the TOC Manager verifying the communications connectivity and data transmission are within the Illinois Tollway requirements.

The Contractor shall be notified in writing from the Engineer (via WBPM) that the System Test has passed and the 30-Day Burn-In Period has immediately started. The Illinois Tollway shall be responsible for conducting the 30-Day Burn-in Test.

The Illinois Tollway will complete the System Test within 2 weeks of notification from the Engineer requesting that all ITS sites be tested.

**30-Day Burn-in Period**
The purpose of the 30-Day Burn-in Period demonstrates that the ITS Pole Mounted Enclosure (CCTV or MVDS) and associated field devices (CCTV and/or MVDS) communicates 100% of the time to the TIMS software and that accurate speed and volume data (as per manufacturer's specifications) is being received during the duration of the test.

For the 30-Day Burn-in Period to be accepted, the Contractor shall demonstrate to the Engineer that:

- The Engineer, Illinois Tollway ITS Manager or TOC Manager has not submitted no trouble tickets or no written (via email or WBPM) failure notification(s) within the 30-Day period.
  - Failure notification shall include, but not be limited to:
    - Any ITS Pole Mounted Enclosure (CCTV or MVDS) and associated field devices (CCTV and/or MVDS) power or communication error(s).
    - Data accuracy below the manufacturer's specification.

        - Any ITS Pole Mounted Enclosure (CCTV or MVDS) and associated field devices (CCTV and/or MVDS) configuration errors.
        - Any operations anomaly that the Contractor cannot explain or rectify.
    - For every one (1) day the Contractor is required to mitigate/fix a problem, an additional one (1) day per testing will be added to the 30-Day test.
- Contractor received documentation from the Engineer of written approval (via email) from the TOC Manager verifying the 30-Day Burn-In period has been successfully completed.
    - The TOC Manager will provide the Engineer with a Burn-in Test Log at the end of successful completion.

**Final System Acceptance and Training**

A representative of the Contractor shall witness the final inspection of the ITS Pole Mounted Enclosure (CCTV or MVDS) performed by the Engineer. Final acceptance of the all work associated with this item will be made after:

- Successful completion of the project final walk-through by the Illinois Tollway's ITS GEC.
- Contractor received written approval from the Engineer of contractor submission (via WBPM) to the Engineer for all Record Drawings and Warranty documents including an electronic computer file (MicroStation and PDF) including a sketch of each ITS element assembly, user/operator manuals, listing each device's location, identification number, wireless channel information and GPS coordinates.
    - The Contractor shall provide three hard and three electronic (PDF) copies of each of the operation and maintenance manuals to the Engineer for approval.
- Notification of Final Acceptance in writing (via WBPM) received from the Engineer.

**WARRANTY**

All ITS Pole Mounted Enclosure (CCTV or MVDS) shall be warranted and guaranteed against defects and/or failure in design, materials, and workmanship within the warranty period. The Contractor shall submit the warranty terms as part of each material item's shop drawing submittal for approval.

The warranty shall provide that, in the event of a malfunction during the warranty period, the defective system component shall be replaced with a new component by the manufacturer or his/her representative.

Any system component that, in the opinion of the Engineer, fails three (3) times prior to the expiration of the warranty will be judged as an unsuitable system and shall require the entire system be replaced by the device manufacturer or representative with a new system of the same type at no additional cost to the Illinois Tollway. The unsuitable system shall be permanently removed from the project. A failure shall also be defined as the field device becoming unable to comply with all applicable standards at the time of original construction.

All manufacturer's equipment guarantees or warranties shall be included in the maintenance manuals for the subject equipment.

**METHOD OF MEASUREMENT**

This work will be measured in units of each, completed in place and accepted.

**BASIS OF PAYMENT**

This work will be paid for at the contract unit price per each for ITS POLE MOUNTED ENCLOSURE (CCTV or MVDS).

The payment to the Contractor will adhere to the following schedule:

Ten percent (10%) of the contract unit price will be paid upon receipt of submission and approval of all product submittal documentation, shop drawings, and calculations.

Sixty-five percent (65%) of the contract unit price will be paid at completion of the local field test acceptance by the Engineer at all locations. Written approval from the Engineer that all local field tests have been accepted is required before payment is released.

The final twenty-five percent (25%) of the contract unit price will be paid after Final System Acceptance at all locations. The final inspection of the entire system will be performed by the Engineer in the presence of a representative of the Contractor. Written approval from the Engineer that Final Acceptance has been granted is required before payment is released.

The installation and testing of the ITS Pole Mounted Enclosure (CCTV or MVDS), ITS device pole, electrical service, grounding, MVDS ITS Assembly, CCTV Camera ITS Assembly, and communications shall be paid for under separate items.

| Pay Item Number | Designation | Unit of Measure |
|---|---|---|
| JT132810 | ITS POLE MOUNTED ENCLOSURE (CCTV OR MVDS) | EACH |

## ITS DISCONNECT SWITCH ASSEMBLY (Illinois Tollway)

**Effective: June 30, 2017**
**Revised: March 1, 2019**

### DESCRIPTION

This work shall consist of furnishing and installing a standalone non-fusible disconnect switch in a NEMA 4X housing mounted on steel support posts with concrete foundations for ITS sites as shown on the plans, as directed by the Engineer. See plans for details.

### MATERIALS

The disconnect switch shall be non-fusible, 2 pole, 600 volt, 30 ampere, lockable, with a NEMA 4X rating. Acceptable manufacturers are Square D, Eaton, Siemens, or approved equal.

The disconnect switch shall be mounted across two PVC coated galvanized steel conduit posts. Horizontal support hardware used to attach the disconnect switch to the conduits shall be stainless steel.

Concrete used for the mounting post foundation shall conform to Section 1020 of the Standard Specifications.

### CONSTRUCTION REQUIREMENTS

Installation of the concrete foundations shall conform to the applicable requirements of Section 836 of the Illinois Tollway Supplemental Specifications. Horizontal supports shall be sized to allow conduits to vertically drop outside of the foundations without bends.

The disconnect switch enclosure and door shall be bonded to ground.

### WARRANTY

The ITS Disconnect Switch Assembly shall be warranted and guaranteed against defects and/or failure in design, materials, and workmanship within the warranty period. The Contractor shall submit the warranty terms as part of each material item's shop drawing submittal for approval.

The warranty shall provide that, in the event of a malfunction during the warranty period, the defective system component shall be replaced with a new component by the manufacturer or his/her representative.

Any system component that, in the opinion of the Engineer, fails three (3) times prior to the expiration of the warranty will be judged as an unsuitable system and shall require the entire system be replaced by the device manufacturer or representative with a new system of the same type at no additional cost to the Illinois Tollway. The unsuitable system shall be permanently removed from the project. A failure shall also be defined as the field device becoming unable to comply with all applicable standards at the time of original construction.

All manufacturer's equipment guarantees or warranties shall be included in the maintenance manuals for the subject equipment.

## METHOD OF MEASUREMENT

This work will be measured in units of each, completed in place and accepted.

## BASIS OF PAYMENT

This work will be paid for at the contract unit price per each for ITS DISCONNECT SWITCH ASSEMBLY.

| Pay Item Number | Designation | Unit of Measure |
|---|---|---|
| JT132814 | ITS DISCONNECT SWITCH ASSEMBLY | EACH |

## FIBER OPTIC COMMUNICATIONS, ITS ASSEMBLY (Illinois Tollway)

**Effective: January 15, 2015**
**Revised: March 1, 2019**

### DESCRIPTION

This work shall consist of furnishing, installing, and testing a Fiber Optic Communications, ITS Assembly per the contract plans and as directed by the Engineer and as part of a fully functional ITS site.

The work under this specification shall be in association with the installation of an ITS Pole Mounted Enclosure (CCTV or MVDS), ITS device pole, electrical service, grounding, and ITS device (CCTV or MVDS).

### MATERIALS

The main components of the system are as described below. All other ancillary connection cables, brackets, and other items required for the installation of a fully functional Fiber Optic Communications, ITS Assembly are included in this work.

- Fiber patch panel
- Fiber optic cable
- Associated splice material/jumper cables/connectors/patch cords

The following are the specific materials for the major system component described above:

- The pre-terminated fiber optic patch panel shall be a Fiber Connections G420U008LAB-XXX-0 (substituting "XXX" with the appropriate length of pigtail) patch panel with four duplex LC connectors with a factory attached 8 fiber single-mode fiber optic cable (SMFOC). The pigtail length shall be of a sufficient length as scheduled on the plans, 100 meters minimum, or as directed by the Engineer to accommodate slack requirements to properly splice and store the cable.
- The fiber optic cable shall:
    - Be armored, dry-filled, loose-tube, dispersion-unshifted, singlemode fiber (SMF) with low water peak, gel free, and suitable for underground (i.e., in conduit) and aerial outside plant installation.
    - Meet or exceed the Telecommunications Industry Association (TIA) and Electronic Industries Alliance (EIA) TIA/EIA-492-CAAB specification, the U.S. Department of Agriculture Rural Utilities Service (RUS) 7 CFR 1755.900, Telcordia GR-20 standards, International Electrotechnical Commission (IEC) 60793-2-50 Type B1.3, and International Telecommunication Union ITU-T G.652.D requirements.
    - Be splice-compatible with the Illinois Tollway's existing SMF and require no electronic equipment for dispersion compensation between new and existing fiber.
    - Be continuous and be of the same material.
    - Be in buffer tubes and shall be usable at attenuation of:
        - 1,310 nm, ≤0.4 dB/km loss
        - 1,550 nm, ≤0.3 dB/km loss

- The fiber shall be free of surface imperfections and inclusions.
- Only commercial off the shelf materials, equipment and components shall be furnished.
- All fiber optic core glass shall be from the same manufacturer.

- The fiber optic jumper cables and connectors shall be compliant with the TIA/EIA-568-A and TIA/EIA-604 standards, as applicable, and shall be tested according to the Telcordia/Bellcore GR-326-CORE standard. When tested according to the TIA and EIA's Fiber Optic Test Procedure (FOTP)-171 (TIA/EIA-455-171), the connectors shall test to an average insertion loss of 0.4 decibel and a maximum loss of 0.75 decibel. The connectors shall be tested as detailed in FOTP-107 (TIA/EIA-455-107) to reflectance values of -50 decibels.
  - The fiber optic jumpers shall be two 6.5 foot (2 meter) SMFO duplex LC-LC jumper cables manufactured by Corning, model number 040402R5Z20002M
  - The Contractor shall install the armored, outdoor rated 8 strand SM fiber drop cable as indicated on the plans.

The Contractor shall submit to the Engineer a request for variance when changing equipment prescribed on the FIBER OPTIC COMMUNICATIONS, ITS ASSEMBLY CHECKLIST attached to this special provision. The variance shall be the formal request of an approval of an equal or better substitute for a specified part by providing justification and supporting manufacturer's specifications and other relevant documentation.

**CONSTRUCTION REQUIREMENTS:**
The Contractor shall closely coordinate with the Engineer. This includes, but is not limited to, the following:

**Pre-Procurement Meeting and Documentation Approval**

- The Contractor shall submit for approval to the Engineer, within 10 business days from Notice to Proceed (NTP), a detailed schedule showing dates for: product submittals and approvals; device configuration by the Illinois Tollway; construction/installation; calibration; testing; and warranty of the fiber optic cable, fiber optic patch panel, and fiber optic jumper cable. This detailed schedule shall be included in the project schedule, as required per Illinois Tollway Supplemental Specifications Article 108.02. Schedules for fiber optic cable to be deployed within the larger construction contracts shall be staggered based on resources to be employed.
  - If this installation is part of a larger ITS deployment or construction project, then the furnishing, installation, and testing of the fiber optic cable, fiber optic patch panel, and fiber optic jumper cables, shall be specifically noted in the overall project schedule.

The Contractor shall submit for approval to the Engineer, within 10 business days from NTP, a completed Contractor FIBER OPTIC COMMUNICATIONS, ITS ASSEMBLY CHECKLIST and associated submittals.

The Contractor shall make all submissions to the Engineer through the Illinois Tollway Web Based Program Management (WBPM) system.

The Contractor must obtain approval of the schedule, catalog cut sheets, cabinet wiring diagrams, and calculations from the Engineer prior to purchasing any equipment and subsequently performing the installation per the approved documents, contract plans, and specifications.

**Pre-Installation Requirements**

- Upon receipt of the fiber optic cable (excluding the jumper cables) within this specification, the Contractor shall:
  - Perform an end-to-end attenuation test of the fiber optic cable.
    - All fibers shall be tested to ensure that no discontinuities greater than 0.2 decibel per 300 feet exist.
    - The power meter/light source shall be a calibrated pair that is portable and battery operated.
      - The power meter/light source shall operate at selectable wavelengths of 1,310/1,550 nanometers.
      - The power meter shall have a decibel milliwatt measurement scale with a range of +3 to -45 decibel milliwatts for SMF operation and an accuracy of 0.5 decibel or better.
    - The Contractor shall replace any pre-terminated fiber optic patch panel assemblies exceeding allowable attenuation.
  - Label the pre-terminated fiber optic patch panel in accordance with the Illinois Tollway ITS Labeling Guide.

**Fiber Optic Installation**

- The Contractor shall install the 8 strand Single Mode Fiber optic cable where as noted on the plans and as per the manufactures installation procedures and recommendations, industry accepted installation standards, codes, practices; or as directed by the Engineer.
  - All associated fiber optic cable fusion splices, terminations, and connectors required to connect, but not limited to any existing Illinois Tollway fiber, existing or proposed fiber optic patch panels, fiber optic modems, small-form factor plug (SFPs), or any other terminals, along with all workmanship required to successfully pass the Site Test stated within this special provision.
  - The Contractor shall coordinate all work with the Illinois Tollway Fiber Optic Maintenance Provider on bringing the drop cable into the nearest splice handhole.
    - The Contractor shall use additional care during splicing into the existing fiber system to not interrupt these existing installations. All splicing within the existing fiber optic handholes at the junction of the drop cable and the IT or ITS distribution cable shall be performed by the Illinois Tollway Fiber Optic Maintenance Provider under a separate contract.

**TESTING**

The following tests are required after the installation of the fiber optic cable, fiber optic patch panel, and fiber optic jumper cable. The Contractor shall use the test plans within this special provision to conduct the following tests in the presence of the Engineer.

- First Unit Factory Visual Inspection (If Required)
- Site Test
- System Test
- Final System Acceptance and Training

**First Unit Factory Visual Inspection**
**(ONLY REQUIRED IF FIBER OPTIC COMMUNICATION, ITS ASSEMBLY IS DIFFERENT FROM THIS SPECIAL PROVISION)**

The Contractor (or the Contractor's equipment fabricator) shall completely assemble one fiber optic cable, fiber optic patch panel, and fiber optic jumper cable unit which includes the fiber optic cable, fiber optic patch panel, and fiber optic jumper cable assembly, all equipment, modules, components and complete all internal wiring (including labeling), then provide 5 business days' notice that this unit is ready for inspection. The Contractor shall have one set of contract plans and two sets of shop drawings on site to be redlined with any discrepancies noted. One set of redlines will be retained by the Illinois Tollway. The Contractor shall follow the ITS Labeling Guidelines Manual for all labeling of components. The manual can be found on the Illinois Tollway's main website. In lieu of the Factory Visual Inspection, the Contractor shall obtain from the manufacturer a product validation certification illustrating that the manufacturer has followed their quality processes and verifies that the unit meets the specifications for operations. This certificate must be submitted to the Engineer for review and approval for the Factory Visual Inspection acceptance.

**Site Testing**

The purpose of the Site Test is to have the Contractor demonstrate to the Engineer that all fiber optic cable, fiber optic patch panel, and fiber optic jumper cable components have been installed, connected, labeled, and configured correctly as per contract plans and as per the manufacturer's requirements, utilizing quality workmanship. This installation shall result in accurate data transmission of the contractor installed fiber before being connected to the Illinois Tollway switch and communications system.

The Site Test shall be performed in conjunction with all associated equipment installed at a common site, including but not limited to the following elements. A Site Test shall not be performed at the element or component level. Site Tests shall be performed for all relevant elements at a common site, meeting any Site Test requirements specified for each element.

- CLOSED CIRCUIT TELEVISION (CCTV) CAMERA, ITS ASSEMBLY
- MICROWAVE VEHICLE DETECTION SYSTEM (MVDS), ITS ASSEMBLY
- ITS POLE MOUNTED ENCLOSURE, ITS ASSEMBLY (CCTV or MVDS)
- FIBER OPTIC COMMUNICATIONS, ITS ASSEMBLY
- STATIC SIGN FLASHING BEACON ASSEMBLY INSTALLATION
- SOLAR POWERED GENERATOR ASSEMBLY
- CO-LOCATED SOLAR POWERED GENERATOR ASSEMBLY
- ITS ELEMENT SITE GROUNDING
- MONOPOLE CLOSED CIRCUIT TELEVISION (CCTV) CAMERA TOWER ASSEMBLY

For the Site Test to be accepted, the Contractor shall demonstrate to the Engineer that:

- The installation has been performed as per contract plans and as per the manufacturer's recommendations.
- All connections are tight and cannot be dislodged by incidental contact from the Engineer.
- All fiber optic cable, fiber optic patch panel, and fiber optic jumper cable equipment inside the enclosure shall be properly labeled as per the ITS Labeling Guide (located on the Illinois Tollway website).
- The Contractor has conducted and successfully passed in the presence of the Engineer an

end-to-end, Optical Time Domain Reflectometer (OTDR), splice loss and connector loss tests, as described in this special provision

End-to-End Attenuation Testing

All fibers shall be tested to ensure that no discontinuities greater than 0.2 decibel per 300 feet (2.2 decibels per kilometer) exist. Testing shall be conducted and documented and performed bi-directionally at both 1,310/1,550 nanometers. The Contractor shall repair or replace cable sections exceeding allowable attenuation. The power meter/light source shall be a calibrated pair that is portable and battery operated. The power meter/light source shall operate at selectable wavelengths of 1,310/1,550 nanometers. The power meter shall have a decibel milliwatt measurement scale with a range of +3 to -45 decibel milliwatts for SMF operation and an accuracy of 0.5 decibel or better.

OTDR Tracing

The OTDR test shall be performed if the Scope of Work includes splicing of one or more of the 8 fibers of the pre-terminated fiber optic patch panel. All fibers shall be tested from both cable end points with an OTDR at wavelengths of 1310 and 1550 nm. The fibers that are not terminated at the time of installation shall be tested using a bare fiber adapter. The results of the OTDR testing (i.e., traces for each fiber) and a loss table showing details for each splice or termination tested shall be submitted to the Engineer in an approved electronic format. All OTDR testing shall comply with the EIA/TIA-455-61 standard.

Splice Loss Testing

The Splice Loss test shall be performed if the Scope of Work includes splicing of one or more of the 8 fibers of the pre-terminated fiber optic patch panel. The splice loss for a SMF fusion splice shall not exceed a maximum bidirectional average of 0.1 decibel per splice. The Contractor shall repair or replace splices that exceed allowable attenuation at no additional cost to the Illinois Tollway.

**System Test**

The System Test shall be conducted by the Illinois Tollway. The System Test demonstrates that that the fiber optic cable, fiber optic patch panel, and fiber optic jumper cable provides reliable transportation of the optical signal from attached equipment without any impediment.

If any component fails to pass its System Test, the unit shall be corrected or another unit substituted in its place and the test successfully repeated. If a component has been modified or replaced as a result of a test failure, a report shall be prepared and delivered to the Engineer and Illinois Tollway prior to the retesting of the unit.

For the System Test to begin, the Contractor shall notify the Engineer in writing (via the WBPM system), within 5-Days prior to the start of System Testing, stating that all project sites utilizing the newly installed fiber optic cable, fiber optic patch panel, and fiber optic jumper cable are ready for System Testing.

System Test Acceptance:

- Project pre-final walk-through has been successfully completed by the Illinois Tollway's ITS General Engineering Consultant (GEC).
- Contact the Illinois Tollway Traffic Operations Center (TOC) Manager, after the 5-Day request from above, to request that all aforementioned sites within the project are tested for:
    - Communications connectivity from the Traffic Information Management System (TIMS) to each device site is established.
    - Accurate data transmission and full operational control from each site to TIMS.

- Receive written approval (via the WBPM system) from the Engineer and the TOC Manager verifying the communications connectivity and data transmission are within the Illinois Tollway requirements, and that the System Test has passed.

The Illinois Tollway ITS unit will complete the System Test within 2 weeks of notification from the Engineer requesting that all sites be tested.

**Final System Acceptance**
Final acceptance of the all work associated with this pay item will be made after:

- Successful completion of the project final walk-through by the Illinois Tollway's ITS GEC.
- Submission (via the WBPM system) to the Engineer of all Record Drawings, Warranty documents, user, operator, and maintenance manuals and electronic computer files (MicroStation, PDF, Word and/or Excel) that include completed test reports, a sketch of each ITS element assembly, a listing of each device's location, and identification number.
- Notification of Final Acceptance will be sent in writing (via the WBPM system) by the Engineer.

## WARRANTY

All fiber optic cable, fiber optic patch panel, and fiber optic jumper cable and associated components shall be warranted and guaranteed against defects and/or failure in design, materials, and workmanship within the warranty period. The Contractor shall submit the warranty terms as part of each material item's shop drawing submittal for approval.

The warranty shall provide that, in the event of a malfunction during the warranty period, the defective system component shall be replaced with a new component by the manufacturer or his/her representative.

Any system component that, in the opinion of the Engineer, fails three (3) times prior to the expiration of the warranty will be judged as an unsuitable system and shall require the entire system be replaced by the device manufacturer or representative with a new system of the same type at no additional cost to the Illinois Tollway. The unsuitable system shall be permanently removed from the project. A failure shall also be defined as the field device becoming unable to comply with all applicable standards at the time of original construction.

All manufacturer's equipment guarantees or warranties shall be included in the maintenance manuals for the subject equipment.

## METHOD OF MEASUREMENT

This work will be measured in units of each, completed in place and accepted.

## BASIS OF PAYMENT

This work will be paid for at the contract unit price per each for FIBER OPTIC COMMUNICATIONS,

ITS ASSEMBLY.

The payment to the Contractor will adhere to the following schedule:

Ten percent (10%) of the contract unit price will be paid upon receipt of submission and approval of all product submittal documentation, shop drawings, and calculations.

Sixty-five percent (65%) of the contract unit price will be paid at completion of the local field test acceptance by the Engineer at all locations. Written approval from the Engineer that all local field tests have been accepted is required before payment is released.

The final twenty-five percent (25%) of the contract unit price will be paid after Final System Acceptance at all locations. The final inspection of the entire system will be performed by the Engineer in the presence of a representative of the Contractor. Written approval from the Engineer that Final Acceptance has been granted is required before payment is released.

The ITS Pole Mounted Enclosure (CCTV or MVDS), ITS device pole, electrical service, grounding, and ITS device (CCTV or MVDS) will be paid separately.

| Pay Item Number | Designation | Unit of Measure |
|---|---|---|
| JT132830 | FIBER OPTIC COMMUNICATIONS, ITS ASSEMBLY | EACH |

## FIBER OPTIC COMMUNICATIONS, ITS ASSEMBLY CHECKLIST

PAY ITEM # JT132830
Contract #
e-Builder Submittal Package #:
e-Builder Submittal Date:
Reviewed By (CM Staff Name):
Review Date:

**SUBMITTAL STATUS**
APPROVED ☐
APPROVED AS NOTED ☐
REJECTED ☐

| LOCATION OF REFERENCE | DETAIL SHEET ITEM | ITEM DESCRIPTION | APPROVED MANUFACTURER | APPROVED MODEL No. | SUBMITTED AS SPECIFIED? | PROPOSED EQUIVALENT DETAILS | | |
|---|---|---|---|---|---|---|---|---|
| | | | | | | MANUFACTURER | MODEL No. | NOTES |
| **FIBER OPTIC CABLE/CONNECTOR MODULES/PATCH PANEL** | | | | | | | | |
| SPEC. PROV. | O | Pre-terminated fiber optic patch panel | Fiber Connections | G6204008LAN-100-0 | | | | |
| SPEC. PROV. | O | 12 STRAND ARMORED, OUTDOOR RATED, SM, FOC | | | | | | |
| SPEC. PROV. | M | 2METER SMFO DUPLEX LC-LC JUMPERS (2) | CORNING | 040402R5Z20002M | | | | |

**MAINTAIN INTELLIGENT TRANSPORTATION SYSTEMS (Illinois Tollway)**
**Effective: March 1, 2019**

**Description**
This work shall consist of furnishing all labor, equipment, and incidental materials for maintaining roadway ITS systems, including but not limited to data and power cabling, renewable power sources, and wireless devices for communication, as shown on the contract plans and as stated herein, until the proposed new systems are installed, energized, tested and accepted for operation by the Illinois Tollway.

This work does not include maintenance of Portable Changeable Message Signs (PCMS) installed by the Contractor and existing Illinois Tollway owned fiber backbone and related equipment that are maintained by the Illinois Tollway's fiber maintenance contractor.

The work shall include maintenance of existing Dynamic Message Signs (DMS) and controllers, CCTV, MVDS, CCTV/MVDS co-located units, Bluetooth detection units, Wireless Traffic Detection Systems including access points and repeaters, Roadway Weather Information Systems (RWIS), Weigh-In-Motion (WIM), and all associated enclosures/cabinets including equipment/devices inside the enclosures/cabinets. Also included are poles, pole foundations and other support equipment and equipment grounding.

**Materials**
All materials required for maintenance shall be furnished and delivered by the Contractor to the jobsite at no additional cost to the Illinois Tollway. All materials furnished by the Contractor for maintenance of the system shall meet the requirements of the Illinois Tollway special provisions for new work of the same or similar function. All materials furnished and installed by the Contractor during maintenance of the system shall be become the property of the Illinois Tollway at the conclusion of the Contract. (During the Preconstruction Conference and prior to the Contractor accepting maintenance responsibility, any materials with long lead times shall be identified jointly between the Contractor and Engineer.

**CONSTRUCTION REQUIREMENTS**
Effective the date of the maintenance transfer, the Contractor shall be responsible for the proper operation and maintenance of all existing ITS Systems until contract completions. Operation and maintenance of existing ITS equipment that is relocated becomes the responsibility of the Contractor that relocates the said equipment until the end of the contract.

**Maintenance Transfer**
Upon received of the Notice to Proceed, the Contractor shall initiate an inspections and maintenance transfer request, as specified elsewhere herein. A subsequent inspection and maintenance transfer to the Illinois Tollway is required at the conclusion of the Contract. All issues identified by the Illinois Tollway during inspection must be repaired by the Contractor prior to the Illinois Tollway accepting the maintenance transfer.

**MAINTENANCE OF EXISTING ITS SYSTEMS**
Existing ITS systems include all permanent or temporary ITS system or part of a permanent or temporary ITS system in service prior to the contract that may be affected by the work of the contract as shown on the plans. It remains the Contractor's responsibility to visit the site and ascertain the extent of effort required for compliance with these specifications and failure to do so will not be justification for extra payment or reduced responsibilities.

## MAINTENANCE OF PROPOSED ITS SYSTEMS

### EXTENT OF MAINTENANCE

The Contractor shall maintain all existing ITS equipment, enclosures (including all equipment/devices within the enclosure), structural supports, grounding for all equipment, ITS disconnect switch, and all circuits/fiber connected to the enclosures, as well as all equipment within the enclosures affected by the contract. This may include enclosures and circuits/fiber and equipment e.g. Switches that extend outside the nominal contract limits identified in the contract documents, but are essential to operation of the ITS equipment within the contract limits. There is no "Partial Maintenance" of Illinois Tollway ITS system/equipment. An anti-static electric safety device will be utilized when doing maintenance of ITS Enclosures and for DMS cabinets.

### MAINTENANCE RESPONSIBILITY

The Contractor shall be fully responsible for maintenance of all existing and proposed ITS systems under this contract. Maintenance shall include, but not be limited to, any equipment failures or malfunctions as well as equipment damage either by the motoring public, Contractor operations, or other means.

The Contractor's responsibility shall include the maintenance of ITS equipment units (including enclosures), cable/fiber runs and equipment inside enclosures. In the case of a pole knockdown or equipment damage caused by normal vehicular traffic, the Contractor shall promptly clear the equipment and circuit/fiber discontinuity and restore the system to service.

The Engineer will identify non-functioning ITS equipment and systems and notify the Contractor. Deficiencies will be corrected within the time frame given in the following chart. Uncorrected deficiencies may be designated by the Engineer as necessitating emergency repairs as described elsewhere herein.

The following chart lists the maximum response, service restoration, and permanent repair time the Contractor will be allowed to perform corrective action on specific ITS system equipment.

| INCIDENT OR PROBLEM | SERVICE RESPONSE TIME | SERVICE RESTORATION TIME |
|---|---|---|
| Control cabinet out | 24 hours | 72 hours |
| Motorist caused knockdown, damaged or leaning ITS pole (10) degrees or more | 1 hour to clear | 72 hours |
| Circuit out — Needs to reset breaker | 24 hours | N/A |
| Circuit out — Cable trouble | 24 hours | 72 hours |
| Switch out — Needs to reset Switch | 24 hours | N/A |
| Fiber Out — Cable trouble | 24 hours | 72 hours |

Service Response Time — amount of time from the initial notification to the Contractor until a repair technician physically arrives at the location.

Service Restoration Time — amount of time from the initial notification to the Contractor until the time the system is fully operational again (In cases of motorist caused damage the undamaged portions of the system are operational).

## LIQUIDATED DAMAGES

### Non-Compliance

The Contractor will be subject to liquidated damages of $1,000.00 per incident, per day, to be deducted from next pay estimate, for each occurrence when Engineer determines that Contractor or his Subcontractor is not in full compliance within the **MAINTENANCE RESPONSIBILITY** timetable chart.

### Failure to Respond

The Contractor is required to respond in accordance with the requirements of Maintenance Responsibility. Failure by the Contractor to so respond shall be grounds for liquidated damages of $1,000.00 for each and every occurrence, to be deducted from next pay estimate due within the **MAINTENANCE RESPONSIBILITY** timetable chart.

Damage caused by the Contractor's operations shall be repaired at no additional cost to Illinois Tollway.

### Spare Parts

The Contractor shall maintain an inventory for spare parts for ITS maintenance. The below list shall be followed:

| | |
|---|---|
| CCTV assembly | 10% of the quantity within contract limits, minimum of 1 |
| MVDS assembly | 5% of the quantity within contract limits, minimum of 1 |
| ITS Cabinet | 1 |
| ITS Pole | 1 |

For material details, see Tollway ITS Special Provisions.

## OPERATION OF ITS SYSTEMS

The ITS Systems shall be in proper working and operational condition 24 hours per day, seven days per week. Failure of repairing any ITS device under the Contractor's maintenance within the response time stated above will be subject to Liquidated Damages.

## MAINTENANCE TRANSFER AND PRECONSTRUCTION INSPECTION

Before performing any excavation, removal, or installation work (electrical or otherwise) at the site, the Contractor shall request a maintenance transfer and preconstruction site inspection, to be held in the presence of the Engineer and a representative of the party or parties responsible for maintenance of any ITS systems which may be affected by the work. The request for the maintenance transfer and preconstruction inspection shall be made no less than seven (7) calendar days prior to the desired inspection date. The maintenance transfer and preconstruction inspection shall:

- Complete the transfer checklist.
- Establish the approximate location and existing operating condition of ITS systems which may be affected by the work.

- Establish the condition of ITS systems which may be affected by the work.

The Contractor shall conduct an inventory of all existing ITS system equipment within the project limits, which may be affected by the work, making note of any parts which are found broken or missing, defective or malfunctioning. The inventory and test data shall be reviewed with and approved by the Engineer and a record of the inventory shall be submitted to the Engineer for the record. Without such a record, all systems transferred to the Contractor for maintenance during construction shall be returned at the end of construction in complete, fully operating condition.

**TEMPORARY WIRING/F.O.C.**
Temporary wiring/F.O.C suspended between poles, if any, shall be installed a minimum of 20' above finished grade. Temporary wiring/F.O.C. shall not be wrapped around the pole, connected through the pole handhole, or routed under the base of the pole. All pole handhole covers must always be securely installed for the duration of the contract.

Temporary wiring shall be limited to one aerial power cable and one SM fiber optic cable attached to an existing light pole with prior approval of the Illinois Tollway.

**MARKING OF EXISTING CABLE SYSTEMS**
The parties having jurisdiction and/or maintenance responsibilities over any existing ITS systems within the project limits shall, at the Contractor's request, mark and/or stake, once per location, all underground cable routes owned or maintained by the respective party. A project may involve multiple "locations" where separate ITS electrical/communication systems are involved.

The markings shall be taken to have a horizontal tolerance of at 18 inches to either side of the marking. The request for the cable locations and marking shall be made 48 hours in advance of the request for the maintenance transfer and preconstruction inspection to allow the locates to be completed before the preconstruction site inspection date.

The Contractor shall exercise extreme caution where existing underground utilities and cable runs are identified. The markings of existing systems are made strictly for assistance to the Contractor and this does not relieve the Contractor of responsibility for the repair or replacement of any cable run damaged in the course of his work, as specified elsewhere herein.

**Method of Measurement**
This work will not be measured for payment.

**Basis of Payment**
This work will be paid for at the contract lump sum price for MAINTAIN INTELLIGENT TRANSPORTATION SYSTEMS.

The repair and any parts of the ITS device listed above will paid for according to the Illinois Tollway Special Provisions for CONTRACT ALLOWANCE FOR MAINTAIN INTELLEGENT TRANSPORTATION SYSTEM REPAIR.

| Pay Item Number | Designation | Unit of Measure |
|---|---|---|
| JT134000 | MAINTAIN INTELLIGENT TRANSPORTATION SYSTEMS | L SUM |

**ITS ELEMENT SITE GROUNDING (Illinois Tollway)**

**Effective: January 20, 2014**
**Revised: March 1, 2019**

## DESCRIPTION

This work shall consist of furnishing and installing an ITS element site grounding system in place as shown in the Plans and in accordance with the Special Provisions. This work shall also include the performance of Three-Point, Fall-of-Potential grounding electrode earth resistance test which shall be performed for the Contractor by an independent professional testing service that is equipped and qualified to perform the test and certify the test results. The Three-Point, Fall-of-Potential grounding electrode earth resistance test shall be performed on both new work and on existing installations involved with the work.

## CODES AND STANDARDS

This special provision was developed in accordance with the applicable chapters of the Motorola Standards and Guidelines for Communications Sites (R56).

Also incorporated are the applicable elements of the following standards:

1. ANSI/TIA-222, Section 10.0 – Structural Standard for Steel Antenna Towers and Antenna Supporting Structures, Protective Grounding
2. Illinois Tollway Supplemental Specifications, Section 806 – Grounding
3. NFPA 70 – National Electric Code (NEC)
4. NFPA 780 – Standard for the Installation of Lightning Protection Systems
5. UL 96A – Standard for Installation Requirements for Lightning Protection Systems

Where there are conflicts found between the above standards, the more stringent standard shall govern. Government and local codes shall take precedence over the requirements of this special provision.

## SOIL ANALYSIS

The Contractor shall perform a soil analysis to determine the acidity (pH) and the porosity (aeration) of the soil. The analysis shall also test for the presence of organic acids in the soil commonly associated with poorly drained or poorly aerated soils. Test reports for each ITS Element site shall be provided. In acidic soils with a pH of 5 or lower and in soils where organic acids are found to be present, the ground rod shall be encased as specified elsewhere herein.

## GENERAL GROUNDING MATERIAL REQUIREMENTS

Within 10 business days from Notice to Proceed, the Contractor shall submit via the Illinois Tollway's Web Based Program Management (WBPM) system a completed ITS ELEMENT SITE GROUNDING CHECKLIST (ILLINOIS TOLLWAY), (attached to this special provision), and associated submittals for review and approval by the Engineer. The Contractor shall submit to the Engineer a request for variance when changing equipment prescribed on the ITS ELEMENT SITE GROUNDING

CHECKLIST (ILLINOIS TOLLWAY). The variance shall be the formal request of an approval of an equal or better substitute for a specified part by providing justification and supporting manufacturer's specifications and other relevant documentation.

a) All grounding materials shall be listed for the intended application.

b) Ground rods shall be per Section 806 of the Illinois Tollway supplemental specifications.

c) Aluminum or copper-clad aluminum grounding conductors **SHALL NOT** be used.

d) All grounding electrode conductors shall be 1/C, bare, stranded, soft drawn, tinned- copper unless otherwise specified herein. Grounding electrode conductors shall be per ASTM B 8 for stranded conductors and ASTM B 33 for tinned conductors.

e) All grounding hardware, except ground busses and conductors, must be stainless steel or galvanized rigid steel. (See installation requirements pertaining to dissimilar metals.)

f) Groundings bushings shall be malleable iron, threaded, with insulated liner and solderless lug.

g) Unless otherwise noted, bus bars must be solid annealed copper and be equipped with insulating mounting supports. Bus bars must be pre-drilled with holes suitably sized for terminating up to No. 2/0 AWG grounding conductors with two-hole lugs.

h) Copper or copper-clad ground rods shall not be used in soils where organic acids are present unless protective measures are taken, such as encasing the ground rods in a grounding enhancement material.

i) Grounding Enhancement Material (GEM) shall absorb water from surrounding soil and have hydrogen and water retention properties. The suggested grounding electrode encasement (backfill) material shall be a mixture of 75% gypsum, 20% bentonite clay and 5% sodium sulfate.

**GENERAL GROUNDING INSTALLATION REQUIREMENTS**

a) An ITS Element site shall include but is not limited to a Dynamic Message Signs (DMS) (any type), a DMS Control Cabinet, electrical work for a DMS (any type), an overhead sign structure, a Closed Circuit Television (CCTV) camera (pole mounted, tower mounted, or otherwise), Microwave Vehicle Detector System (MVDS), In-Pavement Vehicle Detection System, Roadway Weather Information System (RWIS), Weigh In Motion (WIM) system, ITS Pole Mounted Enclosure, and Solar Powered Generator Assembly.

b) The ITS Element site grounding electrode system shall be provided at all ITS Element site locations as indicated in the Plans.

c) A bonding jumper between the neutral and grounding bus bars shall be installed at the electrical service entrance panel or enclosure ONLY unless a separately derived system is identified as defined by the National Electric Code (NEC). For example, if a transformer is utilized (unless it is an autotransformer) there exists no direct electrical connection between the primary and secondary sides. In this case, a bonding jumper between the neutral and grounding bus bars on the secondary side would be required.

d) All metallic members either attached to the ITS Element supporting structure and those which comprise the supporting structure shall be bonded together by means of copper bonding jumpers as specified herein to create a continuous low impedance path to the ITS Element site grounding electrode system.

e) All metallic housings with energized components or metallic structures which may become energized under fault conditions shall be bonded to the ITS Element site grounding electrode system.

f) All grounded metal objects within 25 feet of a component of the ITS Element site must be tied into the ITS Element site grounding electrode system using approved grounding electrode conductors, bonding conductors and connection methods as described herein and/or shown in the Plans, or as directed by the Engineer.

g) All equipment bonds must be made to bare metal surfaces as specified herein.

h) All ground rods shall include a ground test well (access well) to allow inspection of connections to the ground rod with exception of any ground rods which are installed beneath roadway shoulder pavement.

i) Exothermic welded joints on galvanized material shall be coated as specified herein to prevent corrosion.

j) Copper/Aluminum joints shall be avoided wherever possible. In cases where this cannot be avoided, the connections shall be as specified herein.

k) Bare copper shall not come in contact with galvanized steel. However, a connection of copper and stainless steel, and a connection of tinned copper and galvanized steel are acceptable.

l) There shall be no coils of power cables internal to any enclosure containing electronic equipment.

m) Contractor shall provide all necessary materials and labor even if not shown specifically on the Plans or specified herein to provide an ITS Element site grounding system in accordance with NEC and Motorola R56 requirements.

**ITS ELEMENT SITE COMPONENTS**

a) Grounding/Bonding Conductors

1. To prevent arcing, all grounding/bonding conductors shall be as short, straight, and with as few kinks as possible. A minimum bending radius of 8 inches shall be maintained. "U" shaped bonding jumpers may be utilized for the bonding of doors and gates only.

2. A UL listed, lightning protection T-splice is an acceptable means of installing grounding/bonding conductors with 90 degree angles provided it can withstand a 200 pound pull test. The T-splice must be listed for use with a 1/C No. 2/0 AWG conductor.

3. All bare copper conductors must be tinned. All copper used for lightning protection or equipment bonding must have 95% conductivity when annealed. See Article 1066.02(a)

of the Standard Specifications for additional requirements.

4. Care shall be exercised during the installation of tinned conductors to ensure surfaces are not damaged. Any tinned conductors damaged during installation shall be replaced at no additional cost to the Illinois Tollway.

5. Any above grade grounding/bonding conductor which is not in conduit shall be supported by a UL listed connector a minimum of every 3 feet.

6. If grounding/bonding conductors are routed in a continuous run of metallic conduit, the conduit system shall be provided with properly installed grounding bushings. Both ends of a metallic conduit containing a grounding conductor must be bonded with a listed grounding bushing.

b) Equipment Grounding Conductor

1. In all cases, equipment grounding conductors originating at the electrical service entrance shall be provided. This equipment grounding conductor shall be bonded to the service reference ground system. The equipment grounding conductor shall be a 1/C copper sized as shown on the plans but at a minimum shall meet the requirements of the NEC Table 250.122.D.

2. Power conductors routed between structures must include an equipment grounding conductor as shown on the plans. This equipment grounding conductor shall be bonded to the site ground by means of direct copper connection to either a grounding bus bar or to the grounding electrode conductor.

3. If conductors are routed in a continuous run of metallic conduit, an equipment grounding conductor shall be provided and the conduit system shall be provided with properly installed grounding bushings. Both ends of a metallic conduit containing a grounding conductor must be bonded with a listed grounding bushing.

c) Bonding Jumper

1. All bonding jumpers shall be 1/C No. 2/0 AWG tinned copper minimum or as required by the NEC Article 250 and as specified herein.

2. At the electrical service entrance, a bonding jumper shall be provided between the neutral and grounding bus bar.

3. At any separately derived system as defined by the NEC, a bonding jumper shall be provided between the neutral and grounding bus bars of the separately derived system. The grounding bus bar of the separately derived system shall also be connected to the overall system ground by direct copper conductor connection.

4. A bonding jumper shall be provided for all metallic enclosures containing electrical conductors or components including but not limited to service entrance panels, disconnect switches, and junction boxes. Any metallic lids and/or doors of said enclosures shall also be bonded by means of a bonding jumper between the main enclosure and the lid and/or door. This bonding jumper shall not impede the function of

opening the door or removing the lid for service.

5. When an ITS element is mounted to a metallic structure , all metallic members either attached to the structure and those which comprise the structure shall be bonded together as shown on the plans to create a continuous low impedance path to the ITS element site grounding electrode system. All conductors for the bonding of metallic members either attached to the structure and/or those which comprise the structure shall be a stranded tinned-copper bonding jumper, minimum No. 2/0 AWG in size

d) Grounding Electrode Conductors

1. All grounding electrode conductors terminating on a ground rod shall be a 1/C, stranded, soft drawn, tinned-copper, minimum No. 2/0 AWG in size, or as specified in the Plans.

2. Grounding electrode conductors shall be installed without any splices.

3. All grounding electrode conductors must be individually run to a ground bus bar or ground rod. The only exception to this "no-daisy chaining" rule is when joining two ground rods together in order to obtain 5 ohms or less.

4. Grounding electrode conductors shall not be run through concrete structure foundations.

e) Ground Well

1. Ground well shall be Neenah Foundry model number R7506-E 10" or approved equal.

2. Each ground well shall have concrete surrounding the access well and shall be of Class SI.

3. The stone shall be CA-6.

f) Grounding/Bonding Connections

1. All connectors shall be rated for both the intended use and the surface upon which it to be installed.

2. Grounding clamps and bushings, wherein specified, must be galvanized steel or a high copper content alloy. For applications involving Dynamic Message Signs (DMS), aluminum bonding plates attached with four screws shall be used in the grounding of the DMS aluminum chassis.

3. Insulation piercing connections shall not be used in the installation of conductor lugs. Only connection devices which require the complete removal of the conductor jacket and which provide a complete connection between the inside of the lug and the outer circumference of the grounding wire shall be permissible.

4. A UL listed, irreversible, pressure-typed crimp connection shall be used to connect a ground rod connected grounding conductor to an internal grounding bus bar. All other internal connections to a bus bar by conductors larger than No. 6 AWG must be made by two-hole lugs.

5. No more than one connection shall be made at each bus bar position unless the connector is listed for multiple conductors.

6. All external and underground connections shall be by exothermic welding.

7. Exothermically welded connections to metal surfaces must be completed with a weld area roughly twice the diameter of the conductor. The area of the connection must first be sanded or filled to expose the bare metal prior to the exothermic weld being performed.

8. Exothermically welded connections to galvanized material shall be coated with a zinc-enriched paint to prevent corrosion.

9. Where copper/aluminum connections cannot be avoided, the connections shall be exothermically welded using an aluminum/copper listed bimetallic transition connector and a listed conductive anti-oxidant compound on all metallic connections.

10. For all mechanical connections, a listed conductive anti-oxidant compound shall be applied between the two metals.

g) ITS Element Site Master Grounding Bus Bar (MGB):

1. Each ITS Element shall have a Master Grounding Bus Bar (MGB) made of solid annealed copper installed in a specific location as shown in the Plans. For example, a pole mounted CCTV camera shall have the MGB attached to the pole below the enclosure. For applications involving DMS, the MGB shall be approximately 12 inches long, 4 inches tall, and ¼ inches thick, and shall be mounted in a NEMA 4X enclosure on the galvanized steel panel as shown on the Plans. The bus bar mounts shall provide electrical isolation from the steel panel.

2. The MGB hole pattern shall permit connecting two-hole lugs for up to No. 2/0 AWG grounding conductors.

3. The MGB shall be provided with a bare tinned-copper 1/C No. 2/0 AWG conductor which shall be connected via an exothermic weld to an ITS Element site ground triad/halo electrode system ground rod located below the MGB in a grounding well.

h) ITS Element Site Grounding Electrode System:

1. In the case when a DMS or any other ITS element is installed on an overhead sign structure (cantilever or span type), the overhead sign structure shall be provided with a site grounding electrode system to provide a single ground reference. This grounding electrode system shall consist of ground rods installed in ground wells and oriented around the concrete foundation(s) of the overhead sign structure as shown on the Plans (grounding halo). The ground rods within the grounding halo(s) shall be connected to each other by a stranded continuous 1/C No. 2/0 AWG bare tinned-copper conductor. The grounding halo(s) shall also be bonded to the MGB as specified elsewhere herein.

2. Where a span type overhead sign structure is specified including concrete foundations, grounding halos shall be provided oriented around both concrete foundations as shown on the Plans. Where the distance between the two grounding halos is less than 200 feet,

the grounding halos shall be bonded together at no less than two separate points on each by a stranded 1/C No. 2/0 AWG bare tinned-copper conductor installed a minimum of 30 inches below grade or at the frost line, whichever is deeper.

3. All ground rods shall be installed such that the top of the ground rod is accessible inside the ground well. All ground rods installed beneath a paved roadway shoulder (void of a ground access well) shall be installed such that the top of the ground rod is a minimum of 30 inches below grade or at the frost line, whichever is deeper.

4. Whenever possible, ground rods shall be installed a nominal distance of 1.1 times the length of a rod and a minimum of 36 inches from all foundations or other underground structures. In no case shall a ground rod be installed through a foundation or beneath travelled roadway pavement.

5. Whenever possible, the spacing between adjacent ground rods shall be 2 times the length of the ground rod and a minimum of 6 feet in any direction.

6. When the ITS Element site grounding electrode system as shown on the plans does not result in a resistance less than or equal to 5 ohms, the Contractor shall install additional ground rods and stranded continuous 1/C No. 2/0 AWG bare tinned-copper conductors in an expanding star-burst pattern until the resistance is brought down to acceptable levels. Typically the additional ground rods would be located further out from the MGB than the original equipment ground rods. However, it is permissible to install additional rods between the equipment and MGB as long as the required separation distances are maintained. Any additional ground rods and conductors as required bringing the resistance down to 5 ohms or less shall be included in this work.

7. No more than three grounding electrode conductors shall be connected to a single ground rod.

i) Handholes:

1. All handholes shall be provided with a ground rod extending up into the handhole cavity. The resistance to ground of this ground rod shall be 5 ohms or less.

2. Any handhole located adjacent to the ITS Element shall be equipped with a 12-inch x 4-inch x ¼-inch solid annealed copper grounding bus bar.

3. In all cases, power conductors routed between structures include an equipment grounding conductor as shown on the Plans. This equipment grounding conductor shall be bonded to the handhole ground rod or to the handhole grounding bus bar.

4. All metallic components of the handhole including but not limited to the frame, lid and any metallic conduits entering the cavity shall be bonded together and to the ground rod utilizing a 1/C braided tinned-copper bonding jumper, minimum No. 2/0 AWG in size.

5. A grounding bushing shall be used if the entire conduit run is metallic.

6. Neutral conductor(s) shall not be bonded to the handhole grounding bus bar or ground rod; neutral conductor(s) shall pass through the handhole non-spliced.

7. Cable with no metallic components (for example, a direct-burial, non-armored, fiber optic cable) need not be connected to the ground bar however, the metallic conduit sheath which it entered the handhole shall be connected to the ground bar.

8. Any handholes located within 200 feet of the ITS Element site grounding electrode system shall also be bonded to the ITS Element site electrode system by a stranded continuous 1/C No. 2/0 AWG bare tinned-copper conductor installed a minimum of 30 inches below grade or at the frost line, whichever is deeper.

9. All grounding/bonding connections within the handhole shall be by exothermic welds.

j) <u>ITS Element Enclosure or Control Cabinet</u>

1. The Contractor shall ensure that every ITS element Control Cabinet is grounded as described herein and on the Plans.

2. For ITS applications involving dynamic message signs, both the DMS control cabinet and the DMS structure shall be provided with a site grounding electrode system. These grounding electrode systems shall consist of ground rods oriented in a triad/halo next to the concrete foundations of the DMS controller cabinet and the DMS structure as shown on the plans. The ground rods within the grounding triad/halo shall be connected to each other by a stranded continuous 1/C No. 2/0 AWG bare tinned-copper conductor.

3. Grounding/bonding of the equipment inside the DMS enclosure shall be similar to the grounding of the DMS Control Cabinet as applicable to the equipment installed. The equipment grounding conductor originating from the electrical service entrance of the DMS system shall be routed to within this enclosure. This conductor shall be bonded to an internal insulated grounding bus bar similar to that of the DMS Controller Cabinet specified elsewhere herein. This equipment grounding conductor shall also be bonded to the MGB specified elsewhere herein. This conductor routed between the MGB and the DMS Enclosure grounding bus bar shall be a stranded continuous 1/C No. 2/0 AWG bare tinned-copper conductor installed on the structure to the MGB.

4. The DMS enclosure shall be equipped with at least one internal grounding lug that is installed by the manufacturer. The Contractor shall connect any internal grounding lug(s) to the grounding bus bar.

5. Any non-welded conductive part of the DMS enclosure shall also be bonded together utilizing 1/C braided bare tinned-copper bonding jumpers, minimum No. 2/0 AWG in size. Portions of the enclosure which are welded together do not require a bonding jumper. U-bolt connections or metal to metal contact do not offer a sufficiently conductive path and so must be equipped with bonding jumper. Connections through a painted DMS enclosure surface shall not offer a sufficient conductive path and shall be equipped with a bonding plate for connection to the bonding jumper. See General Grounding Installation Requirements section for discussion on bonding the dissimilar metals of the steel DMS truss and the aluminum DMS enclosure.

6. Where the distance between the DMS controller cabinet and the DMS site grounding electrode system is less than 200 feet, the DMS controller site grounding electrode system shall be bonded to the DMS site grounding electrode system at no less than two separate points on each by a stranded continuous 1/C No. 2/0 AWG bare tinned-copper

conductor installed a minimum of 30 inches below grade or at the frost line, whichever is deeper.

7. All ITS equipment grounds inside the ITS element cabinet shall be connected to a copper bus bar which shall then be connected to the ITS element site grounding electrode system by means of a stranded bare tinned-copper 1/C No. 2/0 AWG conductor routed to each ground rod comprising ITS element site grounding electrode system.

8. The copper bus bar shall be mounted such that it is insulated from all metallic items, including the cabinet chassis itself, except by equipment grounding jumpers.

k) Testing

The Contractor shall use the test plans within this special provision to conduct the following tests per ITS Element grounding site in the presence of the Engineer, in accordance with the test requirements identified and found on the ITS Site Grounding Acceptance Test Form included herein.

1. All testing shall be conducted in the presence of the Engineer after a minimum 48 hour notification period. All test results, including those where the design criteria was not achieved, shall be documented. All retests shall be witnessed by the Engineer and documented by the Contractor (via the WBPM system).

2. As stated above, the installed grounding system at ITS Element sites shall be tested by the Contractor to confirm that there is a maximum 5 ohms resistance to ground within the grounding system. Proper grounding of AC power disconnect shall be verified by the use of a clamp-on ohmmeter. Testing of resistance to ground from the chassis of electronic equipment is not recommended due to the potential to damage of the electronics; however, the Contractor shall be required to test resistance to ground from each bus bar after all chassis grounds have been disconnected and taped to avoid accidental contact during testing.

3. Three-Point Fall-of-Potential. The site grounding electrode systems shall be tested using the three-point fall-of-potential method as detailed in ANSI/IEEE STD 81, BS 7430, NFPA 7800-2004, and MIL-HDBK-419A. Test results must be documented and submitted to the Engineer via the WBPM system.

## METHOD OF MEASUREMENT

This work will be measured for payment in units of each ITS element site for all ITS Element Grounding as required herein and shown on the plans. Each ITS Element type listed below shall be considered a unit of 1 each per type of site. Adjacent sites shall be measured separately. Co-

located devices on a single pole mounted site shall be considered a single site.

- ITS Element Pole Mounted assembly
- Solar Powered Generator assembly
- ITS Monopole CCTV Tower assembly
- Weigh-in-Motion/Virtual Weigh-in-Motion system
- Static Flashing Sign Beacon assembly
- Roadway Weather Information System

Grounding for Dynamic Message Sign and Controller Cabinet will not be measured for payment.

**BASIS OF PAYMENT**

This work will be paid for at the contract unit price per each for ITS ELEMENT SITE GROUNDING, of the assembly or system specified. Grounding for Dynamic Message Sign and Controller Cabinet shall be included in DMS ELECTRICAL WORK of the Type specified.

The payment to the Contractor will adhere to the following schedule:

Ten percent (10%) of the contract unit price will be paid upon receipt of submission and approval of all system documentation (product submittals and checklist, shop drawings).

Eighty percent (80%) of the contract unit price will be paid upon completion of the installation of the ITS ELEMENT SITE GROUNDING.

Ten percent (10%) of the contract unit price will be paid upon receipt of submission and approval of final documentation (as-builts and testing).

The installation and testing of the ITS Pole Mounted Enclosure (CCTV or MVDS), ITS device pole, foundation, electrical service, grounding, MVDS ITS Assembly, and communications shall be paid separately.

| Pay Item Number | Designation | Unit of Measure |
|---|---|---|
| JT134037 | ITS ELEMENT SITE GROUNDING – POLE MOUNTED ASSEMBLY | EACH |

ITS ELEMENT SITE GROUNDING (TOLLWAY)

Revision: 1/14/15

PAY ITEM #
Contract #
e-Builder Submittal Package #:
e-Builder Submittal Date:
Reviewed By (CM Staff Name):
Review Date:

SUBMITTAL STATUS
APPROVED ☐
APPROVED AS NOTED ☐
REJECTED ☐

| LOCATION OF REFERENCE | DETAIL SHEET ITEM | ITEM DESCRIPTION | APPROVED MANUFACTURER | APPROVED MODEL No. | SUBMITTED AS SPECIFIED? | PROPOSED EQUIVALENT DETAILS | | |
|---|---|---|---|---|---|---|---|---|
| | | | | | | MANUFACTURER | MODEL No. | NOTES |
| ITS ELEMENT SITE GROUNDING SYSTEM | | | | | | | | |
| SPEC. PROV. | | GROUNDING CLAMPS & BUSHINGS | | | | | | |
| SPEC. PROV. | | MASTER GROUND BUS BAR (MGB) | | | | | | |
| SPEC. PROV. | | GROUND INSPECTION/TEST WELL | NEENAH | R-7505-E | | | | |
| SPEC. PROV. | | #2 AWG STRANDED BARE TINNED COPPER GROUND CABLE | | | | | | |
| SPEC. PROV. | | 2/0 AWG STRANDED BARE TINNED COPPER GROUND CABLE | | | | | | |
| SPEC. PROV. | | 2/0 AWG BRAIDED TINNED COPPER BONDING JUMPER (*if required*) | | | | | | |
| SPEC. PROV. | | GROUND RODS (PER TOLLWAY SUPP SPEC SEC 808) | 5/8" DIA. X 10' LONG | | | | | |
| SPEC. PROV. | | GROUNDING HARDWARE | | | | | | |
| SPEC. PROV. | | GROUND ENHANCEMENT MATERIAL (*if required*) | | | | | | |
| SPEC. PROV. | | BUS BARS,CONNECTORS, LUGS, W/ BARRIER SHIELD | | | | | | |
| SPEC. PROV. | | UL LISTED T-SPLICE (*if required*) | | | | | | |
| SPEC. PROV. | | CONDUIT | | | | | | |
| SPEC. PROV. | | CABLE MOUNTING CONNECTIONS | | | | | | |

# ITS Site Grounding Acceptance Test Form

Illinois Tollway

## 1. INTRODUCTION

Site Acceptance Testing of the ITS Site Grounding verifies that the soil conditions and grounding elements achieve the required resistance to ground to properly ground ITS elements at each device site. This document provides the Site Acceptance Test procedure for ITS Site Grounding and shall be used in addition to other Site Acceptance Tests required for the installation of ITS devices.

## 2. PROCEDURE

Test soil conditions to determine if additional grounding measures are required. Grounding tests shall measure the resistance to ground for ITS sites by 3-point/fall of potential method to determine if site is properly grounded. Grounding test shall be made prior to connecting/bonding external grounding with ITS equipment/control cabinets to prevent damage to equipment. The grounding shall be retested if results indicate additional ground measures are required.

# ITS Site Grounding Acceptance Test Form

Illinois Tollway

Project Number and Name: _____

Route (Circle One): I-88 / I-90 / I-94 / I-294 / IL-355

Mile Post: _____ Direction (Circle One): NB / SB / EB / WB / Median

Date / Time: _____ Camera Type: _____

Soil Analysis:

| Test Element | Test Value | Additional Measures Required? | Comment |
|---|---|---|---|
| Acidity (pH > 5) | | ☐ Yes ☐ No | |
| Porosity (aeration)? | ☐ Poor<br>☐ Well | ☐ Yes<br>☐ No | |
| Organic Acids? | ☐ Present<br>☐ None | ☐ Yes<br>☐ No | |

Grounding enhancement materials required? ☐ Yes ☐ No

Grounding Test (3-point/Fall of Potential):

| Test Element | Test Value | Additional Measures Required? | Comment |
|---|---|---|---|
| Resistance to Ground (≤ 5 ohms) | | ☐ Yes ☐ No | |

Additional ground rods required (record retest below)? ☐ Yes ☐ No

| Test Element | Retest Value | Additional Measures Required? | Comment |
|---|---|---|---|
| Resistance to Ground (≤ 5 ohms) | | ☐ Yes ☐ No | |

Additional Comments: _____

Test Conducted By:_____Date:_____

Engineer*:_____Date:_____

* The Site Test shall not be official until the Engineer signs and dates this sheet. The Illinois Tollway will not accept any form that is not signed by both the Test Conductor and the Engineer.

2. the component materials making up the Noise Abatement Wall. For retaining wall, moment slab and bridge mounted Noise Abatement Walls, the point of action of the weight of the individual components shall be their respective centers of gravity. The dead weight including all panel components must not exceed 80 lbs/sq ft. of panel face area for Noise Abatement Wall mounted on bridges, retaining walls or moment slabs. The dead weight for the panel connection to parapets shall not exceed 110 lbs/foot of panel. In addition, the Noise Abatement Wall shall be designed to withstand wind pressure, applied perpendicular to the wall and separately in each direction, a load of 35 pounds per square foot for ground-mounted noise walls, and 50 pounds per square foot for structure-mounted noise walls for Strength III load combination in accordance with the AASHTO LRFD Bridge Design Specifications, 8th Edition. Other load combinations shall be determined per Article 3.8. Deflection of panels shall be limited to L/240 for ground mounted and L/180 for structure mounted where L is equal to the length between panel supports.

3. Noise abatement wall posts with signs mounted shall be designed per AASHTO Standard Specifications for Structural Supports for Highway, Signs, Luminaires, and Traffic Signals, 6th Edition with all interims. Sign panel dead load shall be 2.5 psf and wind load 35 psf. Posts shall be sized to accommodate a minimum 14ft vertical clearance for signs. If noise abatement wall height is less than the clearance, post shall be extended to meet this requirement.

4. All Loading and Geometric requirements as specified in the AASHTO LRFD Specification shall be satisfied.

5. If not specified on the Plans, seismic loads shall be determined in accordance with Sub-Section 1-2.1.3 of the AASHTO LRFD Specifications for Structural Design of Sound Barriers.

6. The Noise Abatement Wall shall be designed with consideration of the movements in the wall due to temperature changes, dead loads and wind loads. Locations and spacing of expansion and contraction devices shall be as designed by the Contractor and reviewed by the Engineer.

7. Posts shall be designed as vertical cantilever beams. Maximum permitted post deflection shall be limited to L/360 where L equals post height (cantilever length). The effects of rotation and deflection at the top of the drilled caisson if used shall be ignored and only the relative displacement between the top of the caisson and top of post due to the applied loads shall be considered when calculating the deflections. Post shall be installed truly vertical. Posts shall be aligned in plan and elevation views. Post exterior dimensions shall be constant depth and width to the top of the noise abatement wall. Horizontally stacked concrete panels shall align the front face of the horizontal segments. The joint between stacked panels shall be the same width as the joints within the ashlar stone pattern.

8. Precast concrete panel wall planks that are end bearing shall incorporate the design elements shown in drawing below. Each supporting edge of the precast panel shall include a galvanized steel bearing pad poured integral with the panel. The pad shall extend a minimum distance of 4 inches beyond the edge of the panel or have a minimum area of 20 sq. in., whichever is greater. The bearing pad shall have a single #4 reinforcement bar welded to it extending into the precast panel.

f-shape parapet with a setback equal to or greater than 1'-8 5/8" and less than or equal to 4'-0" measured from the front face top of parapet (considered to be outside the zone of intrusion), a vehicular collision load of 4.0 kips shall be applied to the top of the Noise Abatement Wall. The crash load shall be applied at the maximum height of the noise abatement wall but no higher than 14 feet.

3. Post and panel type, size, spacing of post and post connections shall be coordinated with and approved by the Illinois Tollway. Continuous corbels shall not be allowed.

4. Structure mounted wall, in addition to expansion/contraction considerations must also accommodate vibration. Shock absorbing vibration pads shall be utilized at bearing points.

**Ground Mounted Noise Abatement Walls**

1. All ground-mounted Noise Abatement Walls located within the clear zone and unshielded shall be designed for 54 kips (Test Level 4 (TL-4) per AASHTO LRFD Bridge Design Specifications Table A13.2-1), and point of load application per Case 1 Section 15.8.4 at 6 feet above pavement. In addition, independently from the above AASHTO specified impact loads, design shall also include a load of 4 kips applied at the maximum height of the noise abatement wall but no higher than 14 feet. Roadway face of the panel is to be flush with the roadway face of the posts for the entire height of the noise abatement wall.

2. All ground-mounted Noise Abatement Walls located within the clear zone and behind a structurally independent TL-4 or TL-5 barrier shall be designed for 54 kips (TL-4 per AASHTO LRFD Bridge Design Specifications Table A13.2-1) for Case 1, and point of load application at 6 feet above pavement (AASHTO LRFD Case 1 15.8.4). For Case 2, loads shall be applied per AASHTO LRFD 5.8.4 and for Case 3 where setback is between 1 foot and 4 feet, load shall be interpolated between 54 kips (Case 1) and 4 kips (Case 2) with a point of application interpolated between 6 feet (Case 1) and 14 feet (Case 2) above pavement. In addition, independently from the above AASHTO specified impact loads, design shall also include a load of 4 kips applied at the maximum height of the noise abatement wall but no higher than 14 feet for setbacks 4 feet or less as defined per AASHTO LRFD Figure 15.8.4-1.

3. The design of the Noise Abatement wall shall also include the effects of lateral earth pressure when the finish or interim grade lines on either side of the wall are unequal and lateral snow storage loads when required.

4. The bottom of any Ground Mounted Noise Abatement Walls foundation shall be a minimum of four feet below finished grade, unless competent rock is encountered. If a drilled shaft foundation is used, it shall be a minimum of six feet below finished grade line or two times the drilled shaft diameter, whichever is greater, unless competent rock is encountered.

5. Foundations for crashworthy Noise Abatement Walls shall consider impact loads.

6. Spread footing foundations shall be designed per the requirements as set forth in Article 10.6 of AASHTO LRFD Bridge Design Specifications, 8th Edition Dated 2017 using the load combinations as specified herein.

Concrete for Precast Concrete Noise Abatement Wall panels and posts, shall conform to the requirements of the applicable portions of Section 1020 of the Standard Specifications. Manufacturer's specifications and mix designs shall be submitted for approval to the Engineer.

1. Concrete for precast, prestressed units shall be Class PS Portland cement concrete; with a minimum compressive strength of 3,500 psi at release and 5,000 psi at 28 days age. Class PS concrete shall conform to the requirements of Section 1020 of the Standard Specifications.

2. The concrete for precast, non-prestressed units shall be IDOT Class PC Portland cement, with a minimum compressive strength of 4,000 psi at 28 days age. Class PC concrete shall conform to the requirements of Section 1020 of the Standard Specifications.

3. The curing methods shall be compatible with the desired aesthetic results.

4. The form liner used to create the random ashlar limestone pattern shall be of high quality and capable of withstanding anticipated concrete pour pressures without causing leakage or causing physical defects. The liner shall be made from high-strength elastomeric urethane material which shall not compress more than 0.02 feet when poured at a rate of 10 vertical feet per hour. The form release agents shall be non-staining, non-residual, and non-reactive.

**Foundation Concrete**

Concrete for constructing Noise Abatement Wall foundations shall be Class SI conforming to Section 1020 of the Standard Specifications.

**Reinforcing Steel and Welded Wire Fabric**

Reinforcing steel shall be in accordance with Article 1006.10 of the Standard Specifications and shall meet the requirements of ASTM A706, Grade 60. Welded wire fabric shall be in accordance with Article 1006.10 of the Standard Specifications. The reinforcing steel and welded wire fabric for precast panels, precast posts, and foundations shall be epoxy coated conforming to Article 1006.10 of the Standard Specifications. Non-epoxy reinforcing steel and welded wire fabric can be used in concrete structures that are permanently underground.

**Pre-stressing Steel Strands**

Pre-stressing steel strands for precast concrete noise abatement wall panels and precast concrete posts shall conform to Article 1006.10 of the Standard Specifications.

**Structural Steel**

Unless otherwise specified, structural steel shall conform to ASTM A709 (ASSHTO M 270) Grade 36, and as specified in Article 1006.04 of the Standard Specifications. Structural steel exposed to weathering shall be hot-dip galvanized in accordance with ASTM A 123 (AASHTO M 111). Weathering Steel (ASTM A588) is not permitted. Before galvanizing, provide a blast surface as specified in Standard Specification Section 506.07. Grind all cut edges.

Paint galvanized steel posts using an approved two-coat paint system, from a paint manufacturer on IDOT's "Current List of Producers (Paint), consisting of an epoxy polyamide as an intermediate coat

and an aliphatic urethane as a finish coat. Paint final coat shall be BEHR paint N300-4, Open Canyon, or equal to match the color of the precast concrete panel stain of HC-149, Siberian Haze as produced by H&C Concrete Coating. Do not use the system prime coat. Do not mix components from different systems. If a wash primer is used, provide the manufacturer's certification of compatibility with the selected paint system.

The paint system shall be applied according to the applicable portions of Section 506 and the paint manufacturer's recommendations.

**Anchor Bolt Assemblies**

Anchor bolts shall be cast-in-place and shall conform to Article 1006.09 of the Standard Specifications. If the anchor bolts in accordance with the Standard Specifications have insufficient shear or tensile strength by maximum dimensions, they may conform to the requirements of ASTM F1554. Hooked anchor bolts are not allowed. Anchor bolt assemblies shall be furnished with either anchorage plates meeting Article 1006.09 of the Standard Specifications, or plate washers in accordance with ASTM A572 (AASHTO M223) Grade 50. Anchor plates and plate washers shall be hot-dip galvanized after fabrication in accordance with ASTM A153 (AASHTO M 232). Paint galvanized anchor bolts using an approved two-coat paint system, from an approved manufacturer, consisting of an epoxy polyamide as an intermediate coat and an aliphatic urethane as a finish coat. The paint system shall be applied according to the applicable portions of Section 506 and the paint manufacturer's recommendations.

**Fasteners and Hardware**

Miscellaneous fasteners and hardware shall conform to Article 1006.08 of the Standard Specifications and shall be galvanized steel in accordance with ASTM A153 (AASHTO M232). All fasteners used with treated wood products shall be stainless steel or hot-dipped galvanized per AASHTO M232, Class C, except the minimum weight of Zinc coating shall be 2.0 oz./sq. ft.

Fasteners for structural steel, other than anchor bolts, shall be high strength structural bolts in conformance with ASTM A325 (AASHTO M 164), Type I and shall be mechanically galvanized in accordance with ASTM A 153 (AASHTO M 232). Paint galvanized fasteners and hardware using an approved two-coat paint system, from an approved manufacturer, consisting of an epoxy polyamide as an intermediate coat and an aliphatic urethane as a finish coat. The paint system shall be applied according to the applicable portions of Section 506 and the paint manufacturer's recommendations.

**Access Door**

Access door(s) shall only be provided at locations show in the plans. Any proposed changes to the locations by the Contractor shall be coordinated through the Engineer and Illinois Tollway PM.

**Maintenance Door**

Maintenance door(s) shall only be provided at locations shown in the plans. Any proposed changes to the locations by the Contractor shall be coordinated through the Engineer and Illinois Tollway PM.

**Stain & Sealer**

Store paint, stain, sealer material in an area where temperatures will not be less than 50°F or more

Before the release strength is attained, the concrete shall be cured by steam, wetted burlap or polyethylene sheet methods. The use of membrane curing compounds will not be permitted.

**Staining of Precast Concrete Post**

Application of the stain on precast concrete post, if used, shall be applied to a clean surface free of latency, dirt, dust, grease, efflorescence, paint, or other foreign material, following manufacturer's requirements for surface preparation. Do not sand blast. Surfaces to receive stain shall be structurally sound, clean, dry, fully cured. Curing agents must be removed a minimum of 14-days prior to the application of stain to allow to dry. Concrete shall also be a minimum of 30-days old prior to the application of stain. Stain shall be thoroughly mixed in accordance to manufacturer's specifications. Do not thin material.

Material shall be applied at rate as recommended by the manufacturer. Absorption rates could be increased or decreased depending on the surface texture and porosity of the substrate so as to achieve even staining.

The manufacturer's temperature and humidity requirement shall be adhered to. Do not apply stain under rainy conditions or within 3 days after the surface has become wet.

Clean up all splatters and over spray.

**Structural Steel**

Structural steel shall be fabricated and erected in accordance with Section 505 of the Standard Specifications, the System supplier's recommendations and as approved by the Engineer. Shop cleaning and preparation of steel surfaces shall be prepared in accordance with ASTM D6386 after galvanizing. The furnishing, application, and protection of the paint coatings shall be as shown on the plans and as specified in Standard Specification Section 506. Structural steel coatings shall be according to Section 1008. The first coat shall meet the requirements of Article 1008.05 (d) of the Standard Specifications. The second coat shall meet the requirements of Article 1008.05 (e) except the color shall be BEHR paint N300-4, Open Canyon, or equal to match the color of the precast concrete panel stain of HC-149, Siberian Haze as produced by H&C Concrete Coating.

The galvanized and two coat paint system shall meet all the requirements of Article 1008.05 (f) of the standard specifications. The coating system shall be evaluated for performance through the National Transportation Product Evaluation Program (NTPEP) for Structural Steel Coatings following the requirements of AASHTO R31 and shall meet the performance criteria listed herein.

**Hardware and Fasteners**

Hardware and fasteners shall be installed in accordance with the System Supplier's recommendations and as approved by the Engineer.

**Excavation and Backfill**

Excavation, including rock excavation, shall be done in accordance with the Shop Drawings, Working Drawings and Section 202 of the Standard Specifications. If drilled caisson shafts are used, they shall be constructed in accordance with Section 516 of the Standard Specifications.

attached to this special provision. The form is signed by the Engineer and submitted via the WBPM system.

| Conduit Size (in) | Mandrel Diameter (in) | Minimum Mandrel Length (in) | Maximum Mandrel Length (in) | Proof (%) |
|---|---|---|---|---|
| 1 | 0.60 | 1.0 | 4 | 80 |
| 1 ¼ | 0.86 | 1.5 | 4 | 80 |
| 1 ½ | 1.12 | 1.8 | 4 | 80 |
| 2 | 1.62 | 2.4 | 6 | 80 |
| 3 | 2.5 | 3.25 | 8 | 80 |
| 4 | 3.5 | 4.25 | 8 | 85 |
| 6 | 5.5 | 6.25 | 10 | 85 |

- The Contractor shall install in all empty conduits, underground or above grade, a $^{5}/_{8}$ inch woven polyester toneable pull tape with a minimum tensile strength of 1200 lbs-force. When multiple underground conduits are installed in the same trench, the toneable pull tape may be installed in only one conduit designated last for cable installation. A non-toneable pull tape with a minimum tensile strength of 1200 lbs-force shall be installed in all remaining conduits. All pull tapes shall have six (6) feet of extra slack extending from each end of the conduit and shall be secured before the conduit ends are plugged.

- Underground cable marking tape shall be installed in accordance with Article 810.04 (a) of the Standard Specifications.

**Method of Measurement:** This work will be measured for payment in feet installed and accepted.

**Basis of Payment:** This work will be paid for at the contract unit price per foot for UNDERGROUND CONDUIT, COILABLE NONMETALLIC CONDUIT, SDR 11 of the size specified.

| Pay Item Number | Designation | Unit of Measure |
|---|---|---|
| JT810873 | UNDERGROUND CONDUIT, COILABLE NONMETALLIC CONDUIT, SDR 11, 1 ¼" DIA. | FOOT |
| JT810874 | UNDERGROUND CONDUIT, COILABLE NONMETALLIC CONDUIT, SDR 11, 1 ½" DIA. | FOOT |
| JT810881 | UNDERGROUND CONDUIT, COILABLE NONMETALLIC CONDUIT, SDR 11, 6" DIA. | FOOT |

**CONCRETE SERVICE PAD (Illinois Tollway)**
**Effective: March 1, 2019**

## DESCRIPTION

This work shall consist of furnishing and installing a precast or cast-in-place concrete service pad at ITS pole locations of the type as shown in the Plans. Service pads shall be installed at locations as follows:

1. Type A pads shall be installed at locations with a slope of 1V:6H or less.
2. Type B pads shall be installed at locations with a slope greater than 1V:6H and less than or equal to 1V:3H.
3. Type C pads shall be installed at locations with a slope greater than 1V:3H.

## MATERIALS

Concrete service pad materials shall be according to the following Section and Articles of the Standard Specifications:

| • Item | Section/Article |
|---|---|
| (a) Portland Cement Concrete (Class SI) | 1020 |
| (b) Coarse Aggregates | 1004.01 |
| (c) Reinforcement Bars | 1006.10 |
| (d) Metal Railings | 509.02 |

## INSTALLATION

Concrete service pads shall be installed at the locations shown on the Plans, or as directed by the Engineer. Excavation and backfill required will not be measured separately for payment. The subgrade for the concrete service pad shall be prepared in accordance with Article 424.04 of the Standard Specifications. Aggregate base shall be compacted to the satisfaction of the Engineer prior to placing the concrete pad. Earth disturbed due to construction activities shall be restored to match existing conditions of the surrounding area and will not be measured separately for payment.

At Type C pad locations, the Contractor shall erect structural steel handrails in accordance with the Illinois Tollway Article 509.01 through 509.07 of the Standard Specifications.

## METHOD OF MEASUREMENT

This work will be measured for payment in units of each.

**BASIS OF PAYMENT**

This work will be paid for at the contract unit price per each for Concrete Service Pad, of the specified type.

| Pay Item Number | Designation | Unit of Measure |
|---|---|---|
| JT836029 | CONCRETE SERVICE PAD, TYPE C | EACH |

## LOCATOR TRACER WIRE

**DESCRIPTION.** This work shall consist of furnishing and installing tracer wire in coilable nonmetallic conduit to locate buried fiber optic cable.

The wire shall be #10 AWG stranded and orange jacketed. The wire shall be a copper conductor, soft drawn, 21% IACS copper clad steel utilizing AISI1006 low carbon steel core with a break load of 282 lbs (55,000 psi). Conductor shall be extruded with a 45 mil high density polyethylene (HDPE) and shall meet the APWA color code of the buried utility line. The wire shall be fully annealed stranded bare copper meeting ASTM B-8 with high molecular weight linear low density polyethylene insulation rated for 30/300/600 volts and -55° C to 60° C.

The tracer wire shall meet the requirements of the following standards:

- American Society for Testing and Materials ASTM/B190 M.
- American Society for Testing and Materials ASTM B170, ASTM D1238.
- UL MISC Wires (600V tracer wire).
- National Electrical Manufacturers Association (NEMA) Standard ANSI/NEMA WC-70-2009/ICEAS95-658-2009.
- ROHS and reach complaint.

Tracer wire shall be pro-trace HF-CCS PE 45 as manufactured by Pro-Line Safety Products or approved equal.

## CONSTRUCTION REQUIREMENTS

### TRACER WIRE INSTALLATION

The wire shall be placed by the Contractor in existing HDPE duct installed by others, as shown on the plans. The wire shall be installed so as to form a continuous mechanical and electrical line throughout the duct bank in which it is installed. The Contractor shall ensure that the existing duct is not damaged during the installation on the tracer wire.

## METHOD OF MEASUREMENT

This work will be measured for payment in feet installed and accepted.

## BASIS OF PAYMENT

This work will be paid for at the contract unit price per foot of LOCATOR TRACER WIRE as specified.

| Pay Item Number | Designation | Unit of Measure |
|---|---|---|
| JT901056 | LOCATOR TRACER WIRE | FOOT |

## THE ILLINOIS STATE TOLL HIGHWAY AUTHORITY

### I-18-4428 Tri-State Tollway (I-294), Bridge Reconstruction (BN 261) Burlington Northern Santa Fe Railway (BNSF) over the Tri-State Tollway (I-294)

Date: May 30, 2019
Re: Request for Information Received from Plan Holders

---

***QUESTION #1***
Per drawing EL-2, please provide more information on equipment tags 1, 2, and 3. Are these pieces of existing equipment standalone?

***ANSWER #1***
Existing Allen Bradley Centerline Series No. 7002136-001-98 Structure Series D NEMA 1 5000V, 1200 Amp; Allen Bradley Catalog No. 1512B-AAA, Diagram No. 7002136-001-98E.

---

***QUESTION #2***
Please confirm the NEMA rating required for the new 2-high switchgear shown on EL-2.

***ANSWER #2***
NEMA 1.

---

***QUESTION #3***
Is the new 2-high switchgear a standalone or will that be a part of the existing gear line up? If is it part of the existing, who is the manufacturer of the existing gear?

***ANSWER #3***
Proposed Allen Bradley gear will be connected to existing Allen Bradley gear.

---

***QUESTION #4***
Would it be acceptable to use asphalt millings (grindings) for embankment on this job?

***ANSWER #4***
The use of Reclaimed Asphalt Pavement (RAP) material within embankment supporting the shoo-fly or permanent railroad will not be permitted. See Special Provision "EMBANKMENT" for requirements.

---

***QUESTION #5***
Does Junction Chamber #1 shown on plan sheet PDP-6 (sheet 162 of 692) require a membrane waterproofing? If so, is it paid separately under pay item X0900064 MEMBRANE WATERPROOFING FOR UNDERGROUND STRUCTURES, or is it included in JI602791 JUNCTION CHAMBER, LOCATION 1?

***ANSWER #5***
Item X0900064 MEMBRANE WATERPROOFING FOR BURIED STRUCTURES shall not be paid for separately. It shall be included with item JI602791 JUNCTION CHAMBER, LOCATION 1.

---

***QUESTION #6***
Can the Tollway provide a Special Provision for Special Waste Disposal?

***ANSWER #6***
The pay item 66900205 SPECIAL WASTE DISPOSAL has been removed from the contract documents.

---

***QUESTION #7***
How do the C10X30 walers detailed on Sheets SB-9 and SB -12 for the Abutments on the Temp Bridge get paid for?

***ANSWER #7***
Walers shall be included in the cost of Z0075400 TIE RODS.

***QUESTION #8***
How does the C10X20 cross-bracing detailed on Sheet SB-13 on the Center Pier for the Temp Bridge get paid for?

***ANSWER #8***
Cross-bracing shall be included in the cost of 51201900 FURNISHING STEEL PILES HP14x89.

***QUESTION #9***
How does the fabricated Support for the Sacrificial Beam detailed on sheet SB-28 get paid for?

***ANSWER #9***
The fabricated support for the sacrificial beam shall be included in the cost of 50500105 FURNISHING AND ERECTING STRUCTURAL STEEL.

***QUESTION #10***
Is it possible to have the CAD files provided converted or "Saved AS" to a DWG format? We cannot open them with AutoCAD.

***ANSWER #10***
The Tollway can only provide CAD files in DXF format as an alternative to the dgn files. DXF files will be made available in the Tollway's online plan room as part of this addendum. These files will be consistent with the revised Special Provision 121 included as part of Addendum No.1.

***QUESTION #11***
Plan Sheet 266 states Timber Pile rows 7 & 8 shall be drilled. Is this full depth or pre-core to an elevation then driven home? Either way, what size hole would this would this be and what material should be used to backfill? Would this still be paid as Drive pile or would it be Drill & Set Pile?

***ANSWER #11***
Full-depth pre-core will be required to minimize disturbance to Flagg Creek Water Reclamation District sewer pipe. Size of the hole to be determined by the Contractor and backfilled with sand or CLSM as needed. Cost is included with 51202305 DRIVING PILES.

***QUESTION #12***
On contract I-18-4428 will progressive shop assembly of the structural steel be allowed in place of full shop assembly? Do all 12 girder lines have to be assembled at once or will it be more like Illinois standard specifications where a progressive assembly will be allowed? For example less than 12 girder lines wide.

***ANSWER #12***
Progressive shop assembly will be acceptable.

***QUESTION #13***
On contract I-18-4428 there is a note on sheet 270 that references galvanizing cover plates – I don't see any over or closure plates part of Bridge BN 261. Is this note applicable?

***ANSWER #13***
Cover plates detailed within the SB series of sheets for the Temporary Shoo-fly are referenced in the plans for BN 261. The note on sheet 270 was added to sheet 318 which is included as part of this addendum.

***QUESTION #14***
For Test Pile #2 on the Timber Piles it is calling out Column Line 164 in Row B2 on the Table on Sheet 266. I believe there is no column 164 line pile in Row B2, and these are also the permanent Steel piles drilled and set for Retaining Wall TS26.64R, NB. Is there a different location for the Test Pile?

***ANSWER #14***
Test pile locations were revised in Addendum 1.

***QUESTION #15***
The elevation view on Sheet 329 shows the pier crashwall for the Temp. Shoofly is to "transition to Temp. Barrier Face" across a distance of 11'-0". Please clarify if this is to occur. If so, please provide a section for this.

***ANSWER #15***
A transition from the shoofly crashwall to the temporary barrier face will not be required. This note has been deleted and the revised sheet will be issued to the successful Bidder.

***QUESTION #16***
The vertical and horizontal sections thru soldier pile wall show that Retaining Wall TS 26.64R, NB. on Sheet 376 is to receive an architectural form liner treatment. Typically the thickness of the wall is modified for the depth of relief of the form liner. Please clarify if the wall thickness should remain at 1'-0" as shown or should it be modified to account for the form liner.

***ANSWER #16***
The wall thickness and reinforcement clearance will be increased to match the relief of the form liner.

***QUESTION #17***
Please confirm that Retaining Wall TS26.65R, NB will not be receiving an architectural form liner treatment.

***ANSWER #17***
Retaining Wall TS26.65R will not receive an architectural form liner.

***QUESTION #18***
Ground improvement excavation does not appear to have a pay item. What pay item is it incidental to?

***ANSWER #18***
Excavation required for the ground improvements will be paid as EARTH EXCAVATION. If the excavation for the ground improvement is within the existing BNSF right-of-way, it shall be disposed per Special Provision "EARTH AND ROCK EXCAVATION" Section 202.03 Condition 1. If the excavation for the ground improvement is within the Western Springs Park District right-of-way, it shall be disposed per Special Provision "EARTH AND ROCK EXCAVATION" Section 202.03 Condition 2.

***QUESTION #19***
Could we re-use the excavated dirt from ground improvements as embankment in the RR ROW?

***ANSWER #19***
If the excavation for the ground improvement is within the existing BNSF right-of-way, it shall be disposed per Special Provision "EARTH AND ROCK EXCAVATION" Section 202.03 Condition 1. If the excavation for the ground improvement is within the Western Springs Park District right-of-way, it shall be disposed per Special Provision "EARTH AND ROCK EXCAVATION" Section 202.03 Condition 2.

***QUESTION #20***
Concerning the ground improvements, on sheet SCH-1, Non-Special Waste quantities, you show 9569 CY of ground improvement to be paid for as non-special waste. Is that all of the ground improvement quantity? If 9569 CY is hauled off, how would we be paid for the material to replace it? 9569 CY of Furnished ex?

***ANSWER #20***
The pay item 66900200 NON-SPECIAL WASTE DISPOSAL has been removed from the contract documents in Addendum No. 1. The quantity of 9,569 cubic yards includes all the excavated material required to install the ground improvement components within the existing BNSF right-of-way and shall be disposed of according to Special Provision EARTH AND ROCK EXCAVATION Section 202.03 Condition 1 and shall not be reused anywhere onsite. Material that meets the criteria specified in Special Provision EARTH AND ROCK EXCAVATION Section 202.03 Condition 2 and the criteria specified in Special Provision EMBANKMENT may be reused onsite. Additional material required to establish both temporary and permanent proposed grade lines shall be paid as pay item 20400100 BORROW EXCAVATION and/or pay item 20400800 FURNISH EXCAVATION.

***QUESTION #21***
The temp. shoofly bridge is not painted –correct?

***ANSWER #21***
Correct. The temporary shoofly bridge will not be painted.

***QUESTION #22***
Is the walkway support bracket WS-1.0 part of pay item structural steel or X7330086-FURNISH AND INSTALL WALKWAY?

***ANSWER #22***
The walkway support brackets are included in the cost of 50500105 FURNISHING AND ERECTING STRUCTURAL STEEL.

***QUESTION #23***
Addendum 1 has been received, however, there were several questions that said were forthcoming in a future addendum. Please consider extending the bid date 3 weeks along with the question deadline period to accommodate more questions that pertain to future addenda. Thanks.

***ANSWER #23***
Bid opening will not be extended. Bid opening will be at 10:30am on June 6, 2019.

## THE ILLINOIS STATE TOLL HIGHWAY AUTHORITY

### I-18-4428 Tri-State Tollway (I-294), Bridge Reconstruction (BN 261) Burlington Northern Santa Fe Railway (BNSF) over the Tri-State Tollway (I-294)

Date: May 30, 2019
Re: Request for Information Received from Plan Holders

---

***QUESTION #24***
This is a formal request to ask for a bid date extension for project I-18-4428 (Bridge Reconstruction BN 261 BNSF) due to the complexity of the project. Please advise if this extension will be granted.

***ANSWER #24***
Bid opening will not be extended. Bid opening will be at 10:30am on June 6, 2019.

---

***QUESTION #25***
Special Provisions call for Hand Rail to be painted. Is this required to be galvanized as well?

***ANSWER #25***
FURNISH AND INSTALL HANDRAIL Special Provision revised in this addendum to require galvanizing fence components. Painting will not be required.

---

***QUESTION #26***
Plan sheets 290 + 307 calls for the fabric to be 1" mesh I lieu of the standard IDOT 2" mesh. The typical installation with stretcher bars and fence holders will not work with the 1" mesh. Will the standard 2" mesh be acceptable? Please Advise.

***ANSWER #26***
The 1" mesh is required for the fabric on the handrails. Alternate stretcher bar compatible with a 1" mesh is acceptable.

---

***QUESTION #27***
On the plan sheets the HSS sections are called out as A500 Grade B. The special Provisions for the F+I Handrail call for A500 Grade C. Will the typical designation of Grade B be acceptable? Please Advise.

***ANSWER #27***
A500 Grade B is acceptable for HSS sections.

---

***QUESTION #28***
Due to the size and complexity of this project, and the fact that we just received Addendum #1, ICC is requesting an additional 2 weeks be added to the bid date. This will allow us time to properly evaluate/analyze the plans and also get more competitive pricing from our subs and suppliers.

***ANSWER #28***
Bid opening will not be extended. Bid opening will be at 10:30am on June 6, 2019.

***QUESTION #29***
Tobi Engineering, Inc. has just read Addendum 1 for this project and in relation to Question # 10, secondary bonding is not allowed per the State of Illinois' Standard Spec., Art. 1083.03. External plates are to be hot bonded to the laminated pad during the vulcanization. In response to the Answer # 10, we cannot recommend an epoxy for secondary bonding that will guarantee the required adhesion per the State of Illinois' Standard Spec., Art. 1083.02 Table and AASHTO. All the States that Tobi Engineering, Inc. manufactures bearing for either, vulcanize the pad to the plate with no keeper bars, or use the keeper bars to contain the laminated pads in position and the laminated pads are not vulcanized to the plates. Are the Bearing Manufacturers, per Answer # 10, being directed to disregard the State of Illinois' Standard Spec., Art. 1083.03 and AASHTO? Please advise.

***ANSWER #29***
Bearing shop drawing and bonding requirements will be reviewed and approved by the BNSF Railway. An alternate to vulcanizing laminated pads is required.

***QUESTION #30***
Drawing 269 of 692 states the quantity of freight/passenger trains through the site each day. The BNSF spec page J-29 states a different quantity of those trains. Please clarify which quantities are correct.

***ANSWER #30***
The estimated number of passenger trains passing through the site each day are published by METRA and Amtrak schedules. Freight train schedules are confidential and therefore the number of freight trains passing through the site are estimated and will be provided by the BNSF Railway to the successful bidder.

***QUESTION #31***
Section D-D on Plan Page SA 37 shows the RR drain pipe coming through the backwall of the bridge and references the drainage plan for continuation of the drainage system. The drainage system plans do not appear to address the bridge drainage system. Please clarify.

***ANSWER #31***
Bid the plans as shown.

***QUESTION #32***
Please provide USACE Permit #LRC-2016-158 that is noted in Special Provision 106.6.

***ANSWER #32***
A copy of the USACE Permit #LRC-2016-158 will be provided to the successful bidder.

***QUESTION #33***
Special Provision 106.6 notes a copy of IDNR-OWR Permit No. NE2018057 can be found at the Illinois Tollway On-Line Plan Room, but we cannot locate it. Can a copy of this permit please be provided?

***ANSWER #33***
A copy of the IDNR-OWR Permit No. NE2018057 will be provided to the successful bidder.

***QUESTION #34***
Special Provision 106.6 notes a copy of MWRD permit can be found at the Illinois Tollway On-Line Plan, but we cannot locate it. Can a copy of this permit please be provided?

***ANSWER #34***
A copy of the MWRD permit will be issued to the successful Bidder.

***QUESTION #35***
While we understand that the Tollway has grouped like Structural Steel items together in the past. However, we request that the temporary railroad structure and the permanent railroad structure by separate pay items to avoid disputes in payment and work. The level of effort is also not accurately captured in the breakdown between the 2 structures given in the plans. This will also facilitate breaking out packages of work to DBEs.

***ANSWER #35***
The pay item 50500105 FURNISHING AND ERECTING STRUCTURAL STEEL will be used to cover the payment of both the temporary and permanent railroad structures.

***QUESTION #36***
The plans callout 156 Trains per day on the tracks, which comes out to a train approximately every 9 min. Please advise on the working restrictions for BNSF and Amtrak and how long work will be restricted or shut down for each train? And/or provide a more detailed train schedule so that we may determine the allowable work window during the day/night/weekend.

***ANSWER #36***
Track availability will be at the review and approval of BNSF Railway throughout the duration of the project.

***QUESTION #37***
There seems to be some confusion about Item JI669015, onsite monitoring of regulated substances. It is paid by the "calendar day". What constitutes a calendar day? If an environmental subcontractor spends 8 hours in one particular calendar day performing this item on this project, does the time get invoiced (to the prime contractor) as 1.0 calendar days? Or does it get invoiced as 8/24, or .33 calendar days? What constitutes 1 calendar day?

***ANSWER #37***
Method of measurement shall follow Special Provision EARTH AND ROCK EXCAVATION.

***QUESTION #38***
Would you happen to know if there was any plan of extending the bid date on this project?

***ANSWER #38***
Bid opening will not be extended. Bid opening will be at 10:30am on June 6, 2019.

***QUESTION #39***
Sheet 41 of 692 states "Close three lanes of traffic and leave remaining lane open to traffic. Close remaining lane for 15-minute durations during beam placement / beam removal" for Roadway Stages 2A, 3A, 4A, and 5A whereas, Sheet 44 of 692 states "Close two lanes of traffic and leave the remaining two lanes open to traffic. Close the remaining two lanes for 15-minute durations during beam placement / beam removal". Please clarify which note is correct.

***ANSWER #39***
The note on sheet 41 is correct.

***QUESTION #40***
Can additional track outage information be provided, such as defining overnight off-peak hours, weekend off-peak times, and if there will be any other permissible work windows or outages other than what is defined on Page J-46 of the Special Provisions?

***ANSWER #40***
Additional track outage information is not available at this time.

***QUESTION #41***
Sheet 309 of 692 Note 5 states "Contractor shall place the first 6" of railroad approved ballast on the bridge deck following completion of deck waterproofing" and Sheet 14 of 692 Note 3 states "Aggregate Ballast (Special) is included in the allowance for Railroad Flagging and Services. The Allowances for Railroad Flagging and Services states this is a budgetary allowance for flagging and services provided by the railroad. Please confirm this ballast is covered in the allowance. If not, will a pay item be added for this, who furnishes the ballast material, is this also required for the Temporary Shoofly structure (the note is not included in these plans), and can a special provision be added for this?

***ANSWER #41***
BNSF is expected to provide all ballast for both the temporary shoofly bridge and permanent bridge is included in the pay item JT154103 ALLOWANCE FOR RAILROAD FLAGGING AND SERVICES.

***QUESTION #42***
Can the work being performed by the railroad be defined?

***ANSWER #42***
The work performed by BNSF is shown or described on the Track Phasing plans (RST-1 thru RST-16).

***QUESTION #43***
Can the services provided by the railroad that are included in the Allowance for Railroad Flagging and Services be defined?

***ANSWER #43***
The ALLOWANCE FOR FLAGGING AND SERVICES item includes all work and material to be performed/provided by BNSF as described or shown on the Track Phasing plans (RST-1 thru RST-16) and railroad flagging.

***QUESTION #44***
Can an extension to the question deadline be provided?

***ANSWER #44***
Question deadline expired at 2pm on May 24, 2019 and will not be extended.

## THE ILLINOIS STATE TOLL HIGHWAY AUTHORITY

### I-18-4428 Tri-State Tollway (I-294), Bridge Reconstruction (BN 261) Burlington Northern Santa Fe Railway (BNSF) over the Tri-State Tollway (I-294)

Date: May 30, 2019
Re: Request for Information Received from Plan Holders

---

***QUESTION #45***
Due to the complexity of the project, multiple DBE have asked for a time extension. Will a bid a bid extension from June 6th be given?

***ANSWER #45***
Bid opening will not be extended. Bid opening will be at 10:30am on June 6, 2019.

---

***QUESTION #46***
Regarding the ground improvements, sheets GI-01 to GI-04 (265-268).

a. Sheet GI-02 shows a gap between pile columns 19 & 21. Is Column 20 missing on purpose for the steel casing pipe? With no Column 20 the number of precast caps is incorrect.
b. 132 pile spaces would require 133 piles, yet the table on GI-4 states there are 134 pile in Rows A & C-K. Please explain why the tables are stating 134 pile per row? Only 133 rows are shown. Which is the true quantity required?
c. Stationing distance between Columns 17 & 150 is 798 feet, while spacing callout is only 792. Which is correct?
d. Row B indicates that columns 145-150 are steel pile from RW TS26.64R, yet the Table (upper left) includes this quantity as timber pile. Which type is correct?
e. Rows A & B, Columns 145-150, appear quantified under those rows but actually fall under lines A2 & B2 alignments. Do they remain as "A" & "B" rows?
f. Sheet GI-03 is missing many titles, call-outs, and notes. Notes for Stations 102+00.44 to 109+98.44 are incomplete/missing portions.
g. Stationing of Table 1, GI-04, do not align with pile spacing shown.
h. Addendum 1 did not change the pile tip for Rows G-K yet Table 1 lengthened the piles. Which length is correct, the value in the table or the calculated?

***ANSWER #46***

a. Column 20 was removed to avoid conflict with the proposed 48" diameter storm sewer.
b. This discrepancy was due to the removal of row 20. 133 rows is the correct number.
c. 798 feet is correct. This discrepancy was due to the removal of row 20. The number of pile spaces is correct, however there is a 12'0" spacing between rows 19 and 21 which accounts for the 6' discrepancy.
d. They are steel piles. The larger number was shown in order to convey the number of caps required (since the steel piles still need caps here).
e. No additional information will be provided on this sheet.
f. Piles that fall within the Table 1 stations should be placed according to Table 1 but coordinated with retaining wall leveling pad elevations as indicated in Note 7.
g. G-K pile lengths should not have changed in Addendum No. 1. Revisions will be included in the next addendum. The new D-F pile lengths are correct.

***QUESTION #47***
The value of the allowance item for JT154103 – Allowance for Railroad Flagging and Services is $13,000,000.00 and the basis of payment is from Supplemental Spec 109.05 which states that the contractor will only be paid the direct of the bill from the railroad plus 5% for the first $10,000.00 and 1% for any amount over $10,000.00. Will the Tollway consider removing this allowance item from the Contractor's scope and instead pay the BNSF directly? This is an unreasonable amount of money being requested of the contractor to finance for the Tollway.

***ANSWER #47***
Pay item JT154103 ALLOWANCE FOR RAILROAD FLAGGING AND SERVICES will not be removed from the contract documents.

***QUESTION #48***
There is a lot of staging and work in this project that must be completely understood in order to provide a responsible bid. With other ISTHA projects bidding, along with the holiday weekend, there is insufficient time to properly analyze, plan, and prepare a bid. Please provide at least a three week extension to the bid date. (A three week extension was provided for a much easier project – the Retaining Wall and Grading project 18-4446. This is much more complicated.

***ANSWER #48***
Bid opening will not be extended. Bid opening will be at 10:30am on June 6, 2019.

***QUESTION #49***
The Contract Specifications, Sheet J-45 - S.P. 107.2 ENVIRONMENTAL PROTECTION states: "The existing bridge structure contains asbestos in the existing deck waterproofing, bearing pads, and pipe drains and the existing beams contain lead paint." Are any Asbestos Inspection surveys or reports available? How is the asbestos remediation to be paid for?

***ANSWER #49***
Asbestos inspection surveys or reports are not available for the existing bridge structure. Asbestos remediation shall be included in the cost of item 50100300 REMOVAL OF EXISTING STRUCTURES NO. 1.

**ADDENDUM NO. 1**
**TO**
**CONTRACT REQUIREMENTS**
**FOR CONTRACT I-18-4428**
**ILLINOIS STATE TOLL HIGHWAY AUTHORITY**

**Date: May 24, 2019**

For which proposals will be received by the Illinois State Toll Highway Authority at its offices, 2700 Ogden Avenue, Downers Grove, Illinois 60515 until 10:30:00 A.M. local time, **June 6, 2019.**

## NOTICE OF REVISION TO CONTRACT

**NOTES:**

1. Revised Schedule of Price pages P-5R, P-8R, P-9R, P-11R, P-12R, P-14R, P-16R, P-17R, P-20R, P-22R, P-25R, P-27R accompany this Addendum and must be inserted into the Contract Proposal by the Bidder. Note, all P-Pages have been included as part of this Addendum.

2. The following revised Special Provisions pages are included with this Addendum:
   Volume II: J-1R, J-20R, J-96R, J-97R, J-102R, J-103R, J-104R, J-105R, J-147R thru J-151R, J-175R, J-284R, J-285R, J-290R, J-329R, J-369R

3. The following new Special Provisions pages are included with this Addendum:
   Volume II: J-103A thru J-103C, J-105A thru J-105D, J-151A

4. The following revised Contract Drawings are included with this Addendum.
   Volume 1: Drawings 235, 237, 239
   Volume 2: Drawings 266 thru 268, 297, 323, 326, 348, 352, 356, 361

5. The following revised Contract Drawings will be issued to the successful Bidder.
   Volume 1: Drawings 9 thru 12, 156, 203, 206, 219, 238
   Volume 2: Drawings 397, 400, 407, 414, 420

6. The following Computer-Aided Design (CAD) files will be uploaded to the On-Line Plan Room as part of this Addendum:
   4428-pr-terrain-model.dgn

7. Pre-Bid meeting minutes are attached for information.

8. Plan-Holder's Requests for Information through May 17th, 2019 are attached for information:

## CHANGES TO THE CONTRACT REQUIREMENTS

## CHANGES TO THE SCHEDULE OF PRICES

| SUMMARY OF REVISIONS TO PAY ITEM QUANTITIES | | | | | | |
|---|---|---|---|---|---|---|
| SP | PAY ITEM NUMBER | DESCRIPTION | UNITS | ORIGINAL QTY | CHANGE | NEW QTY |
| | 20900110 | POROUS GRANULAR BACKFILL | CU YD | 2,462 | +2,556 | 5,018 |
| | 51202900 | TEST PILE TIMBER | EACH | 7 | +5 | 12 |
| | 52200020 | TEMPORARY SOIL RETENTION SYSTEM | SQ FT | 12,776 | +950 | 13,726 |
| | 59100100 | GEOCOMPOSITE WALL DRAIN | SQ YD | 3,883 | -270 | 3,613 |
| * | 66900200 | NON-SPECIAL WASTE DISPOSAL | CU YD | 33,726 | -33,726 | 0 |
| | 66900205 | SPECIAL WASTE DISPOSAL | CU YD | 5,000 | -5,000 | 0 |
| * | X0300015 | CONCRETE WINGWALL REMOVAL | EACH | 6 | -2 | 4 |
| GBSP | X0900064 | MEMBRANE WATERPROOFING SYSTEM FOR BURIED STRUCTURES | SQ YD | 2,812 | -270 | 2,542 |
| * | X5030225 | CONCRETE STRUCTURES (SPECIAL) | CU YD | 0 | +36 | 36 |
| * | X8140105 | HANDHOLE (SPECIAL) | EACH | 5 | -3 | 2 |
| * | JI669010 | REGULATED SUBSTANCES PRE-CONSTRUCTION PLAN | L SUM | 0 | +1 | 1 |
| * | JI669015 | ON-SITE MONITORING OF REGULATED SUBSTANCES | CAL DA | 0 | +600 | 600 |
| * | JI669020 | REGULATED SUBSTANCES FINAL CONSTRUCTION REPORT | L SUM | 0 | +1 | 1 |
| ** | JS280080 | FLOTATION BOOM | FOOT | 30 | +170 | 200 |
| * | JT154051 | CONTRACT ALLOWANCE FOR UNSUITABLE SOIL | UNIT | 560,000 | +5,440,000 | 6,000,000 |
| * | JT160132 | HANDHOLE FOR SINGLE MODE FIBER OPTIC CABLE, 48"X72"X36" | EACH | 7 | +3 | 10 |

* Denotes Special Provision
** Denotes Tollway Supplemental Specifications
GBSP Denotes IDOT Guide Bridge Special Provision

**Change #1**
Contract Requirements, Volume II, Replace Pages P-5, P-8, P-9, P-11, P-12, P-14, P-16, P-17, P-20, P-22, P-25, P-27 with P-5R, P-8R, P-9R, P-11R, P-12R, P-14R, P-16R, P-17R, P-20R, P-22R, P-25R, P-27R (attached).

This replacement contains the following revisions:
1.1. Revised the quantity for pay item 20900110 POROUS GRANULAR BACKFILL from 2,462 to 5,018.
1.2. Revised the quantity for pay item 51202900 TEST TIMBER PILE from 7 to 12.
1.3. Revised the quantity for pay item 52200020 TEMPORARY SOIL RETENTION SYSTEM from 12,776 to 13,726.
1.4. Revised the quantity for pay item 59100100 GEOCOMPOSITE WALL DRAIN from 3,883 to 3,613.

1.5. Revised the quantity for pay item 66900200 NON-SPECIAL WASTE DISPOSAL from 33,726 to 0.
1.6. Revised the quantity for pay item 66900205 SPECIAL WASTE DISPOSAL from 5,000 to 0.
1.7. Revised the quantity for pay item X0300015 CONCRETE WINGWALL REMOVAL from 6 to 4.
1.8. Revised the quantity for pay item X0900064 MEMBRANE WATERPROOFING SYSTEM FOR BURIED STRUCTURES from 2,812 to 2,542.
1.9. Revised the designation for pay item X0900064 from MEMBRANE WATERPROOFING FOR BURIED STRUCTURES to MEMBRANE FOR WATERPROOFING SYSTEM FOR BURIED STRUCTURES.
1.10. Added new pay item X5030225 CONCRETE STRUCTURES (SPECIAL) added. This item has a quantity of 36.
1.11. Revised the quantity for pay item X8140105 HANDHOLE (SPECIAL) from 5 to 2.
1.12. Added new pay item JI669010 REGULATED SUBSTANCES PRE-CONSTRUCTION PLAN. This item has a quantity of 1.
1.13. Added new pay item JI669015 ON-SITE MONITORING OF REGULATED SUBSTANCES. This item has a quantity of 600.
1.14. Added new pay item JI669020 REGULATED SUBSTANCES FINAL CONSTRUCTION REPORT. This item has a quantity of 1.
1.15. Revised the quantity for pay item JS280080 FLOTATION BOOM from 30 to 200.
1.16. Revised the quantity for pay item JT154051 CONTRACT ALLOWANCE FOR UNSUITABLE SOIL from 560,000 to 6,000,000.
1.17. Revised the quantity for pay item JT160132 HANDHOLE FOR SINGLE MODE FIBER OPTIC CABLE, 48"X72"X36" from 7 to 10.
1.18. Revised the designation for pay item JT160132 from HANDHOLE FOR FIBER OPTIC CABLE, 48"X72"X36" to HANDHOLE FOR SINGLE MODE FIBER OPTIC CABLE, 48"X72"X36".

## CHANGES TO THE CONTRACT SPECIAL PROVISIONS

**Change #2**
Contract Requirements, Volume II, Replace Page J-1 with J-1R (attached).

This replacement contains the following revisions:
2.1. Removed reference for Performance Specifications for items: "Segmental Concrete Block Retaining Walls" and "Precast Modular Retaining Walls". The standards specifications apply for these items.

**Change #3**
Contract Requirements, Volume II, Replace Page J-20 with J-20R (attached).

This replacement contains the following revisions:
3.1. Included additional anticipated expedited fee for the Temporary Occupancy Permit Application.

**Change #4**
Contract Requirements, Volume II, Replace Page J-96 with J-96R (attached).

This replacement contains the following revision:
4.1. Revised reference to Geotechnical Reports to match report titles included in the On-Line Plan Room.

**Change #5**
Contract Requirements, Volume II, Replace Page J-97 with J-97R (attached).

This replacement contains the following revisions:
5.1. Added reference to 3D-drainage SUDA and 3D-interim drainage SUDA to match CAD files included in the On-Line Plan Room.
5.2. Revised file name for 3D proposed subgrade and grading file from 4222-pr-terrain-model.dgn to 4428-pr-terrain-model.dgn

5.3. Revised file name for 3D existing terrain file from 4222-terrain-model.dgn to 4428-terrain-model.dgn
5.4. Revised list of available CAD files to include an additional (.dxf) format for CAD files.

**Change #6**
Contract Requirements, Volume II, Replace Pages J-102 & J-103 with J-102R, J-103R, J-103A thru J-103C (attached).

This replacement contains the following revisions:
6.1. The EARTH AND ROCK EXCAVATION specification has been entirely revised.

**Change #7**
Contract Requirements, Volume II, Replace Page J-104 & J-105 with J-104R & J-105R (attached).

This replacement contains the following revisions:
7.1. The UNCONTAMINATED SOIL DISPOSAL specification has been entirely revised.

**Change #8**
Contract Requirements, Volume II, added new Pages J-105A thru J-105D (attached).

This replacement contains the following revisions:
8.1. Added Special Provision for EMBANKMENT.

**Change #9**
Contract Requirements, Volume II, Replace Pages J-147 thru J-151 with J-147R thru J-151R (attached).

This replacement contains the following revisions:
9.1. Added requirements for steel posts, galvanizing, and painting for FENCE (SPECIAL).
9.2. Various minor editing corrections throughout the special provision.

**Change #10**
Contract Requirements, Volume II, added new Page J-151A (attached).

This contains the following new special provision:
10.1. Added Special Provision for CONCRETE STRUCTURES (SPECIAL).

**Change #11**
Contract Requirements, Volume II, Replace Page J-175 with J-175R (attached).

This replacement contains the following revisions:
11.1. Revised location for pick-up of handhole material from Century Link by Contractor to Tollway Maintenance Facility, M-2 (Hillside).
11.2. Revised dimensions of handhole from 6'x6'x6' to 6'x6'x4' split manhole.

**Change #12**
Contract Requirements, Volume II, Replace Pages J-284 & J-285 with J-284R & J-285R (attached).

This replacement contains the following revisions:
12.1. Added a space after the description and the next paragraph.
12.2. Revised the Designation in the table at the end of special provision from "Filed" to "Field".

**Change #13**
Contract Requirements, Volume II, Replace Pages J-290 with J-290R (attached).

This replacement contains the following revision:
13.1. Added clarification to Section 701.14 (b) of the Illinois Tollway Supplemental Specification.

**Change #14**
Contract Requirements, Volume II, Replace Pages J-329 with J-329R (attached).

This replacement contains the following revision:
14.1. Revised the Method of Measurement and Basis of Payment to be Lump Sum to match the pay item unit of measure.

**Change #15**
Contract Requirements, Volume II, Replace Pages J-369 with J-369R (attached).

This replacement contains the following revision:
15.1. Revised the ALLOWANCE FOR UNSUITABLE SOIL special provision.

## CHANGES TO THE CONTRACT PLANS

**Change #16**
Contract Plans, Volume 1, Drawings 9, 10, 11, 12

This change contains the following revisions:
16.1. Revised quantity for the following pay item: 20900110 POROUS GRANULAR BACKFILL, 51202900 TEST PILE TIMBER.
16.2. Revised quantity for the following pay item: 51202900 TEST PILE TIMBER.
16.3. Revised quantity for the following pay item: 52200020 TEMPORARY SOIL RETENTION SYSTEM.
16.4. Revised quantity for the following pay item: 59100100 GEOCOMPOSITE WALL DRAIN.
16.5. Deleted the following pay item: 66900200 NON-SPECIAL WASTE DISPOSAL.
16.6. Deleted the following pay item: 66900205 SPECIAL WASTE DISPOSAL.
16.7. Revised quantity for the following pay item: X0300015 CONCRETE WINGWALL REMOVAL.
16.8. Revised quantity for the following pay item: X0900064 MEMBRANE WATERPROOFING FOR BURIED STRUCTURES.
16.9. Pay Item description for pay item X0900064 revised from MEMBRANE WATERPROOFING FOR BURIED STRUCTURES to MEMBRANE FOR WATERPROOFING SYSTEM FOR BURIED.
16.10. Revised quantity for the following pay item: X8140105 HANDHOLE (SPECIAL).
16.11. Added new pay item X5030225 CONCRETE STRUCTURES (SPECIAL).
16.12. Added new pay item: JI669010 REGULATED SUBSTANCES PRE-CONSTRUCTION PLAN.
16.13. Added new pay item: JI669015 ON-SITE MONITORING OF REGULATED SUBSTANCES.
16.14. Added new pay item: JI669020 REGULATED SUBSTANCES FINAL CONSTRUCTION REPORT.
16.15. Revised quantity for the following pay item: JS280080 FLOTATION BOOM.
16.16. Revised quantity for the following pay item: JT154051 CONTRACT ALLOWANCE FOR UNSUITABLE SOIL.
16.17. Revised quantity for the following pay item: JT160132 HANDHOLE FOR SINGLE MODE FIBER OPTIC CABLE, 48"X72"X36".
16.18. Pay Item description for pay item HANDHOLE FOR FIBER OPTIC CABLE, 48"X72"X36" to HANDHOLE FOR SINGLE MODE FIBER OPTIC CABLE, 48"X72"X36".

Revised drawings to be issued to successful Bidder.

**Change #17**
Contract Plans, Volume 1, Drawing 156

This change contains the following revisions:
17.1. Pay item numbers revised from 60200105 to 60200805 for Structure No. S017, S019, S021, and S024 in Drainage Structure Schedule.
Revised drawing to be issued to successful Bidder.

**Change #18**
Contract Plans, Volume 1, Drawing 203

This change contains the following revision:
18.1. Revised grading south of railroad tracks and within the railroad's right-of-way from approximate Sta. 102+00 to 104+00.
Revised drawing to be issued to successful Bidder.

**Change #19**
Contract Plans, Volume 1, Drawing 206

This change contains the following revision:
19.1. Revised grading in southeast and southwest quadrants to show proposed grading linework.
Revised drawing to be issued to successful Bidder.

**Change #20**
Contract Plans, Volume 1, Drawing 219

This change contains the following revision:
20.1. Revised quantity in callout for pay item JS280080 FLOTATION BOOM from 30 LF to 200 LF.
Revised drawing to be issued to successful Bidder.

**Change #21**
Contract Plans, Volume 1, Drawing 235 (attached)

This change contains the following revisions:
21.1. Revised temporary wood pole locations, dimension between last two poles, and station callouts along northbound I-294. Revised callouts for handhole and conduits for underground Century Link fiber optic spur line.

**Change #22**
Contract Plans, Volume 1, Drawing 237 (attached)

This change contains the following revision:
22.1. Revised callouts for handholes and revised Bill of Materials for pay item JT160132 HANDHOLE FOR SINGLE MODE FIBER OPTIC CABLE, 48"X72"X36".

**Change #23**
Contract Plans, Volume 1, Drawing 238

This change contains the following revision:
23.1. Revised overlapping inset callouts.
Revised drawing to be issued to successful Bidder.

**Change #24**
Contract Plans, Volume 1, Drawing 239 (attached)

This change contains the following revisions:
24.1. Added permanent easement linework to drawing. Revised callouts for handholes and conduit.
24.2. Callout "CONTRACTOR SHALL EXPOSE THE FIBER OPTIC DUCT BANK ADJACENT TO RETAINING WALL TS26.65, NB PRIOR TO INSTALLATION OF ANY PART OF RETAINING WALL TS26.65, NB" added to drawing. Cost of exposing of the fiber optic duct bank will not be measured for payment.

**Change #25**
Contract Plans, Volume 2, Drawing 266 (attached)

This change contains the following revisions:
25.1. Revised TEST PILES table.
25.2. Added elevation view of Temporary Soil Retention System.
25.3. Revised Notes #3 & #5.
25.4. Added Note #6.
25.5. Revised Note ****.

**Change #26**
Contract Plans, Volume 2, Drawing 267 (attached)

This change contains the following revisions:
26.1. Revised Note #3.
26.2. Revised elevation callout from EL. 644.0 to EL. 650.0 in PILED EMBANKMENT SECTION AT STATIONS 100+82.44 TO STA. 101+94.44.
26.3. Added T/Pile callout in TEMP. RETAINING WALL NO. 3 AND PILED EMBANKMENT SECTION AT STATIONS 110+04.44 TO 113+52.44.

**Change #27**
Contract Plans, Volume 2, Drawing 268 (attached)

This change contains the following revisions:
27.1. Revised Notes #1B, #3 & #7.
27.2. Revised Notes *** & ****.
27.3. Revised estimated pile tip elevations, nominal required bearing, and pile diameter rows in table LOCATION (PILE ROW A TO K) PILED EMBANKMENT AT STATIONS 102+00.44 TO 109+98.44.
27.4. Revised pile diameter row in table LOCATION (PILE ROW A2 TO F2) TEMP. RETAINING WALL 3 AND PILED EMBANKMENT AT STATIONS 110+04.44 TO 112+02.44.
27.5. Revised pile diameter row in table LOCATION (PILE ROW A2 TO F2) TEMP. RETAINING WALL 3 AND PILED EMBANKMENT AT STATIONS 112+05.44 TO 113+52.44.
27.6. Revised pile diameter row in table LOCATION (PILE ROW A1 TO I1) PILED EMBANKMENT AT STATIONS 100+82.44 TO 101+94.44.
27.7. Revised pile lengths in LENGTH column of TABLE 1.
27.8. Added Note "THE PILES IN ROWS D, E, AND F SHALL BE 15 INCH IN DIAMETER AT THE TOP AND TAPER TO 11 INCH DIAMETER AT THE PILE TIP." to lower left corner of the drawing.
27.9. Added Note "THE PILES IN ROWS D1 THROUGH I1 SHALL BE 14 INCH IN DIAMETER AT THE TOP AND TAPER TO 11 INCH DIAMETER AT THE PILE TIP." to the lower left corner of the drawing.
27.10. Added pay items 52200020 TEMPORARY SOIL RETENTION SYSTEM and Z0065100 SETTLEMENT PLATFORMS to the Total Bill of Material.
27.11. Revised quantity for pay item 51202900 TEST TIMBER PILES in Total Bill of Material.

**Change #28**
Contract Plans, Volume 2, Drawing 297 (attached)

This change contains the following revisions:

28.1. Material note "ALL STRUCTURAL STEEL SHALL CONFORM TO ASTM DESIGNATION. SPECIFICATION: A709, GRADE 50 OR 50W, EXCEPT AS NOTED. ALL A709 GR. STEEL FOR PRIMARY MEMBERS SHALL MEET IMPACT REQUIREMENTS FOR HIGH STRENGTH STRUCTURAL STEEL PER CHAPTER 15 OF THE AREMA MANUAL. BALLAST PAN, STIFFENERS, DIAPHRAGMS AND OTHER SECONDARY MEMBERS SHALL BE EXEMPT FROM IMPACT TEST REQUIREMENTS. GALVANIZE STEEL AS NOTED ON PLANS." has been added.

28.2. Note "ESTIMATED LIFTING WEIGHT OF ONE BEAM = 15.5 TONS" has been deleted.

28.3. Note "ESTIMATED LIFTING WEIGHT OF FOUR BEAMS W/BALLAST PAN = 79 TONS" has been deleted.

**Change #29**
Contract Plans, Volume 2, Drawings 323 & 326 (attached)

This change contains the following revision:

29.1. Note #5 "ALL PILES SHALL BE VIBRATED IN PLACE" has been added.

**Change #30**
Contract Plans, Volume 2, Drawing 348 (attached)

This change contains the following revision:

30.1. Note #7: "A MINIMUM OF 10 YEAR DESIGN LIFE FOR TEMPORARY RETAINING WALLS SHALL BE INCLUDED IN THIS DESIGN" has been added.

**Change #31**
Contract Plans, Volume 2, Drawing 352 (attached)

This change contains the following revision:

31.1. Note #9: "A MINIMUM OF 10 YEAR DESIGN LIFE FOR TEMPORARY RETAINING WALLS SHALL BE INCLUDED IN THIS DESIGN" has been added.

**Change #32**
Contract Plans, Volume 2, Drawing 356 (attached)

This change contains the following revision:

32.1. Note #12: "A MINIMUM OF 10 YEAR DESIGN LIFE FOR TEMPORARY RETAINING WALLS SHALL BE INCLUDED IN THIS DESIGN" has been added.

**Change #33**
Contract Plans, Volume 2, Drawing 361 (attached)

This change contains the following revision:

33.1. Note #7: "A MINIMUM OF 10 YEAR DESIGN LIFE FOR TEMPORARY RETAINING WALLS SHALL BE INCLUDED IN THIS DESIGN" has been added.

**Change #34**
Contract Plans, Volume 2, Drawing 397

This change contains the following revision:
34.1. Note #15: "FOR RESTRICTIONS ON SITE ACCESS AND STAGING, SEE GENERAL NOTES 11 THRU 13 ON SHEET GEN-1 FOR ADDITIONAL DETAILS" has been deleted. This information is included in the Special Provisions.
34.2. Pay item 20900110 POROUS GRANULAR BACKFILL with a quantity of 2,396 CY added to Bill of Material.
34.3. Pay item number for MEMBRANE WATERPROOFING SYSTEM FOR BURIED STRUCTURES revised from X0322128 to X0900064.
34.4. Removed 16' X 9' from description of pay item X1200140.
Revised drawing will be issued to successful Bidder.

**Change #35**
Contract Plans, Volume 2, Drawing 400

This change contains the following revision:
35.1. Added Pay Item porous granular backfill as required backfill for culvert installation.
35.2. Note "6" LAYER OF POROUS GRANUALR BACKFILL IS INCIDENTAL TO THE COST OF PAY ITEM PRECAST CONCRETE BOX CULVERT (SPECIAL)" has been added.
Revised drawing will be issued to successful Bidder.

**Change #36**
Contract Plans, Volume 2, Drawing 407

This change contains the following revision:
36.1. Note #15: "FOR RESTRICTIONS ON SITE ACCESS AND STAGING, SEE GENERAL NOTES 11 THRU 13 ON SHEET GEN-1 FOR ADDITIONAL DETAILS" has been deleted. This information is included in the Special Provisions.
36.2. Pay item 20900110 POROUS GRANULAR BACKFILL with a quantity of 160 CY added to Bill of Material.
36.3. Pay item number for MEMBRANE WATERPROOFING SYSTEM FOR BURIED STRUCTURES revised from X0322128 to X0900064.
36.4. Removed 16' X 9' from description of pay item X1200140.
Revised drawing will be issued to successful Bidder.

**Change #37**
Contract Plans, Volume 2, Drawings 414 & 420

This change contains the following revisions:
37.1. Removal of Pay item X0322128 MEMBRANE WATERPROOFING SYSTEM FOR BURIED STRUCTURES. This item is shown as X0900064 on page P-16 in Schedule of Prices, on Drawing 11 in Summary of Quantities, and on page GBSP-16 in Special Provisions. Removal of Pay item 59100100 GEOCOMPOSITE WALL DRAIN from bill of materials on Drawing 414.
37.2. Drawing 420, Removed Pay item X0300015 CONCRETE WINGWALL REMOVAL from Bill of Materials.
37.3. Drawing 414, Note #15: "FOR RESTRICTIONS ON SITE ACCESS AND STAGING, SEE GENERAL NOTES 11 THRU 13 ON SHEET GEN-1 FOR ADDITIONAL DETAILS" has been deleted. This information is included in the Special Provisions.
Revised drawings will be issued to successful Bidder.

## CHANGES TO THE COMPUTER-AIDED DESIGN (CAD) FILES

**Change #38**
Computer-Aided Design (CAD) File 4428-pr-terrain-model.dgn

This change contains the following revision:
38.1. Terrain model was updated to reflect a revision to the grading south of railroad tracks and within the railroad's right-of-way from approximate Sta. 102+00 to 104+00. This change is associated with the Contract Drawing 203 change described in Change #18 above. This file replaces file 4222-pr-terrain-model.dgn.

**Change #39**
Computer-Aided Design (CAD) Files

This change contains the following revision:
39.1. Available Computer-Aided Design (CAD) Files were provided in an additional (.dfx) format.

---

**END OF ADDENDUM CHANGES**

THE ILLINOIS STATE TOLL HIGHWAY AUTHORITY (TOLLWAY)

CONTRACT NO. I-18-4428

BRIDGE RECONSTRUCTION (BN 261) BURLINGTON NORTHERN SANTA FE (BNSF) RAILWAY OVER

THE TRI-STATE TOLLWAY (I-294)

MILE POST 26.6

SCHEDULE OF PRICES

| SP | PAY ITEM NUMBER | DESIGNATION | UNIT | QUANTITY | UNIT PRICE DOLLAR | AMOUNT DOLLAR |
|---|---|---|---|---|---|---|
| * | 20100500 | TREE REMOVAL, ACRES | ACRE | 12.0 | | |
| | 20101100 | TREE TRUNK PROTECTION | EACH | 10 | | |
| * | 20200100 | EARTH EXCAVATION | CU YD | 109,456 | | |
| * | 20201200 | REMOVAL AND DISPOSAL OF UNSUITABLE MATERIAL | CU YD | 13,630 | | |
| | 20400100 | BORROW EXCAVATION | CU YD | 45,350 | | |
| | 20400800 | FURNISHED EXCAVATION | CU YD | 75,772 | | |
| | 20800150 | TRENCH BACKFILL | CU YD | 5,210 | | |
| | 20900110 | POROUS GRANULAR BACKFILL | CU YD | 5,018 | | |
| | 25000400 | NITROGEN FERTILIZER NUTRIENT | POUND | 475 | | |
| | 25000500 | PHOSPHORUS FERTILIZER NUTRIENT | POUND | 62 | | |
| | 25000600 | POTASSIUM FERTILIZER NUTRIENT | POUND | 1,162 | | |
| | 25100127 | MULCH, METHOD 3A | ACRE | 25.3 | | |
| | 25100630 | EROSION CONTROL BLANKET | SQ YD | 72,154 | | |
| | 25200100 | SODDING | SQ YD | 16,686 | | |
| | 25200110 | SODDING, SALT TOLERANT | SQ YD | 2,192 | | |
| | 25200200 | SUPPLEMENTAL WATERING | UNIT | 349 | | |
| | 28000250 | TEMPORARY EROSION CONTROL SEEDING | POUND | 2,520 | | |

## THE ILLINOIS STATE TOLL HIGHWAY AUTHORITY (TOLLWAY)

**CONTRACT NO. I-18-4428**

**BRIDGE RECONSTRUCTION (BN 261) BURLINGTON NORTHERN SANTA FE (BNSF) RAILWAY OVER THE TRI-STATE TOLLWAY (I-294)**

**MILE POST 26.6**

**SCHEDULE OF PRICES**

| SP | PAY ITEM NUMBER | DESIGNATION | UNIT | QUANTITY | UNIT PRICE DOLLAR | AMOUNT DOLLAR |
|---|---|---|---|---|---|---|
| | 28100107 | STONE RIPRAP, CLASS A4 | SQ YD | 40 | | |
| | 28200200 | FILTER FABRIC | SQ YD | 708 | | |
| | 31100200 | SUBBASE GRANULAR MATERIAL, TYPE A | CU YD | 27 | | |
| | 31100500 | SUBBASE GRANULAR MATERIAL, TYPE A 6" | SQ YD | 1,866 | | |
| | 31101200 | SUBBASE GRANULAR MATERIAL, TYPE B 4" | SQ YD | 980 | | |
| | 31102000 | SUBBASE GRANULAR MATERIAL, TYPE C | CU YD | 12 | | |
| | 35102400 | AGGREGATE BASE COURSE, TYPE B 12" | SQ YD | 3,110 | | |
| | 40200700 | AGGREGATE SURFACE COURSE, TYPE A 8" | SQ YD | 1,441 | | |
| | 40201000 | AGGREGATE FOR TEMPORARY ACCESS | TON | 840 | | |
| | 40600275 | BITUMINOUS MATERIALS (PRIME COAT) | POUND | 6,998 | | |
| | 40600290 | BITUMINOUS MATERIALS (TACK COAT) | POUND | 1,875 | | |
| | 40600982 | HOT-MIX ASPHALT SURFACE REMOVAL - BUTT JOINT | SQ YD | 24 | | |
| | 40603085 | HOT-MIX ASPHALT BINDER COURSE, IL-19.0, N70 | TON | 348 | | |
| | 40603340 | HOT-MIX ASPHALT SURFACE COURSE, MIX "D", N70 | TON | 641 | | |
| | 42000060 | WELDED WIRE REINFORCEMENT | SQ YD | 24 | | |
| | 42000501 | PORTLAND CEMENT CONCRETE PAVEMENT 10" (JOINTED) | SQ YD | 203 | | |
| | 42001300 | PROTECTIVE COAT | SQ YD | 1,652 | | |

## THE ILLINOIS STATE TOLL HIGHWAY AUTHORITY (TOLLWAY)

**CONTRACT NO. I-18-4428**

**BRIDGE RECONSTRUCTION (BN 261) BURLINGTON NORTHERN SANTA FE (BNSF) RAILWAY OVER**

**THE TRI-STATE TOLLWAY (I-294)**

**MILE POST 26.6**

**SCHEDULE OF PRICES**

| SP | PAY ITEM NUMBER | DESIGNATION | UNIT | QUANTITY | UNIT PRICE DOLLAR | AMOUNT DOLLAR |
|---|---|---|---|---|---|---|
| | 42400200 | PORTLAND CEMENT CONCRETE SIDEWALK 5 INCH | SQ FT | 8,824 | | |
| | 42400800 | DETECTABLE WARNINGS | SQ FT | 50 | | |
| | 44000100 | PAVEMENT REMOVAL | SQ YD | 4,527 | | |
| | 44000157 | HOT-MIX ASPHALT SURFACE REMOVAL, 2" | SQ YD | 11,652 | | |
| | 44000400 | GUTTER REMOVAL | FOOT | 501 | | |
| | 44000500 | COMBINATION CURB AND GUTTER REMOVAL | FOOT | 2,152 | | |
| | 44000600 | SIDEWALK REMOVAL | SQ FT | 4,950 | | |
| | 44001980 | CONCRETE BARRIER REMOVAL | FOOT | 395 | | |
| | 44004000 | PAVED DITCH REMOVAL | FOOT | 1,196 | | |
| | 44004250 | PAVED SHOULDER REMOVAL | SQ YD | 8,123 | | |
| | 44201747 | CLASS D PATCHES, TYPE IV, 8 INCH | SQ YD | 1,866 | | |
| * | 50100300 | REMOVAL OF EXISTING STRUCTURES NO. 1 | EACH | 1 | | |
| * | 50100400 | REMOVAL OF EXISTING STRUCTURES NO. 2 | EACH | 1 | | |
| | 50104400 | CONCRETE HEADWALL REMOVAL | EACH | 10 | | |
| | 50157300 | PROTECTIVE SHIELD | SQ YD | 1,980 | | |
| | 50200100 | STRUCTURE EXCAVATION | CU YD | 14,485 | | |
| * | 50201101 | COFFERDAM (TYPE 1) (LOCATION - 1) | EACH | 1 | | |

## THE ILLINOIS STATE TOLL HIGHWAY AUTHORITY (TOLLWAY)

**CONTRACT NO. I-18-4428**

**BRIDGE RECONSTRUCTION (BN 261) BURLINGTON NORTHERN SANTA FE (BNSF) RAILWAY OVER**

**THE TRI-STATE TOLLWAY (I-294)**

**MILE POST 26.6**

**SCHEDULE OF PRICES**

| SP | PAY ITEM NUMBER | DESIGNATION | UNIT | QUANTITY | UNIT PRICE DOLLAR | AMOUNT DOLLAR |
|---|---|---|---|---|---|---|
| | 50300225 | CONCRETE STRUCTURES | CU YD | 651.9 | | |
| | 50401205 | PRECAST CONCRETE CAPS | EACH | 1,929 | | |
| * | 50500105 | FURNISHING AND ERECTING STRUCTURAL STEEL | L. SUM | 1 | | |
| | 50500505 | STUD SHEAR CONNECTORS | EACH | 1,985 | | |
| | 50800105 | REINFORCEMENT BARS | POUND | 490,410 | | |
| | 50800205 | REINFORCEMENT BARS, EPOXY COATED | POUND | 328,372 | | |
| | 50800515 | BAR SPLICERS | EACH | 193 | | |
| | 50901760 | PIPE HANDRAIL | FOOT | 248 | | |
| | 51200205 | FURNISHING UNTREATED PILES 30.1-45 FEET | FOOT | 65,238 | | |
| | 51200305 | FURNISHING UNTREATED PILES OVER 45 FEET | FOOT | 689 | | |
| | 51201900 | FURNISHING STEEL PILES HP14X89 | FOOT | 6,104 | | |
| | 51202305 | DRIVING PILES | FOOT | 72,031 | | |
| | 51202900 | TEST PILE TIMBER | EACH | 12 | | |
| | 51203900 | TEST PILE STEEL HP14X89 | EACH | 5 | | |
| | 51204650 | PILE SHOES | EACH | 108 | | |
| GBSP | 51602000 | PERMANENT CASING | FOOT | 1,941 | | |
| GBSP | 51603000 | DRILLED SHAFT IN SOIL | CU YD | 1,291 | | |

## THE ILLINOIS STATE TOLL HIGHWAY AUTHORITY (TOLLWAY)

**CONTRACT NO. I-18-4428**

**BRIDGE RECONSTRUCTION (BN 261) BURLINGTON NORTHERN SANTA FE (BNSF) RAILWAY OVER**

**THE TRI-STATE TOLLWAY (I-294)**

**MILE POST 26.6**

**SCHEDULE OF PRICES**

| SP | PAY ITEM NUMBER | DESIGNATION | UNIT | QUANTITY | UNIT PRICE DOLLAR | AMOUNT DOLLAR |
|---|---|---|---|---|---|---|
| | 52100400 | STEEL BEARING ASSEMBLY | EACH | 16 | | |
| | 52200010 | TEMPORARY SHEET PILING | SQ FT | 4,027 | | |
| | 52200020 | TEMPORARY SOIL RETENTION SYSTEM | SQ FT | 13,726 | | |
| | 52200100 | FURNISHING SOLDIER PILES (HP SECTION) | FOOT | 951 | | |
| | 52200105 | FURNISHING SOLDIER PILES (W SECTION) | FOOT | 4,317 | | |
| | 52200200 | DRILLING AND SETTING SOLDIER PILES (IN SOIL) | CU FT | 35,675 | | |
| | 52200250 | UNTREATED TIMBER LAGGING | SQ FT | 8,547 | | |
| | 52200700 | PRECAST MODULAR RETAINING WALL | SQ FT | 20,719 | | |
| | 52200800 | SEGMENTAL CONCRETE BLOCK WALL | SQ FT | 3,912 | | |
| | 52200900 | CONCRETE STRUCTURES (RETAINING WALL) | CU YD | 602.7 | | |
| | 54001001 | BOX CULVERT END SECTIONS, CULVERT NO. 1 | EACH | 1 | | |
| | 54001003 | BOX CULVERT END SECTIONS, CULVERT NO. 3 | EACH | 1 | | |
| | 54001004 | BOX CULVERT END SECTIONS, CULVERT NO. 4 | EACH | 1 | | |
| | 54003000 | CONCRETE BOX CULVERTS | CU YD | 841.8 | | |
| | 54010605 | PRECAST CONCRETE BOX CULVERTS 6'X5' | FOOT | 562 | | |
| | 54248510 | CONCRETE COLLAR | CU YD | 6.4 | | |
| | 550A0070 | STORM SEWERS, CLASS A, TYPE 1 15" | FOOT | 152 | | |

THE ILLINOIS STATE TOLL HIGHWAY AUTHORITY (TOLLWAY)

CONTRACT NO. I-18-4428

BRIDGE RECONSTRUCTION (BN 261) BURLINGTON NORTHERN SANTA FE (BNSF) RAILWAY OVER

THE TRI-STATE TOLLWAY (I-294)

MILE POST 26.6

SCHEDULE OF PRICES

| SP | PAY ITEM NUMBER | DESIGNATION | UNIT | QUANTITY | UNIT PRICE DOLLAR | AMOUNT DOLLAR |
|---|---|---|---|---|---|---|
| | 550A0120 | STORM SEWERS, CLASS A, TYPE 1 24" | FOOT | 58 | | |
| | 550A0190 | STORM SEWERS, CLASS A, TYPE 1 48" | FOOT | 55 | | |
| | 550A0340 | STORM SEWERS, CLASS A, TYPE 2 12" | FOOT | 88 | | |
| | 550A0360 | STORM SEWERS, CLASS A, TYPE 2 15" | FOOT | 1,927 | | |
| | 550A0380 | STORM SEWERS, CLASS A, TYPE 2 18" | FOOT | 235 | | |
| | 550A0410 | STORM SEWERS, CLASS A, TYPE 2 24" | FOOT | 202 | | |
| | 550A0430 | STORM SEWERS, CLASS A, TYPE 2 30" | FOOT | 1,033 | | |
| | 550A0470 | STORM SEWERS, CLASS A, TYPE 2 42" | FOOT | 1,920 | | |
| | 550A0480 | STORM SEWERS, CLASS A, TYPE 2 48" | FOOT | 392 | | |
| | 550A5500 | STORM SEWERS, CLASS A, TYPE 2 EQUIVALENT ROUND-SIZE 42" | FOOT | 9 | | |
| | 55100200 | STORM SEWER REMOVAL 6" | FOOT | 41 | | |
| | 55100400 | STORM SEWER REMOVAL 10" | FOOT | 162 | | |
| | 55100500 | STORM SEWER REMOVAL 12" | FOOT | 97 | | |
| | 55100700 | STORM SEWER REMOVAL 15" | FOOT | 1,074 | | |
| | 55100900 | STORM SEWER REMOVAL 18" | FOOT | 44 | | |
| | 55101200 | STORM SEWER REMOVAL 24" | FOOT | 1,175 | | |
| | 55101600 | STORM SEWER REMOVAL 36" | FOOT | 103 | | |

THE ILLINOIS STATE TOLL HIGHWAY AUTHORITY (TOLLWAY)

CONTRACT NO. I-18-4428

BRIDGE RECONSTRUCTION (BN 261) BURLINGTON NORTHERN SANTA FE (BNSF) RAILWAY OVER

THE TRI-STATE TOLLWAY (I-294)

MILE POST 26.6

SCHEDULE OF PRICES

| SP | PAY ITEM NUMBER | DESIGNATION | UNIT | QUANTITY | UNIT PRICE DOLLAR | AMOUNT DOLLAR |
|---|---|---|---|---|---|---|
| | 55101800 | STORM SEWER REMOVAL 42" | FOOT | 526 | | |
| | 55101900 | STORM SEWER REMOVAL 48" | FOOT | 8 | | |
| | 56100900 | WATER MAIN 12" | FOOT | 1,818 | | |
| | 58700300 | CONCRETE SEALER | SQ FT | 11,810 | | |
| | 59100100 | GEOCOMPOSITE WALL DRAIN | SQ YD | 3,613 | | |
| | 60200105 | CATCH BASINS, TYPE A, 4'-DIAMETER, TYPE 1 FRAME, OPEN LID | EACH | 10 | | |
| | 60200305 | CATCH BASINS, TYPE A, 4'-DIAMETER, TYPE 3 FRAME AND GRATE | EACH | 8 | | |
| | 60200805 | CATCH BASINS, TYPE A, 4'-DIAMETER, TYPE 8 GRATE | EACH | 4 | | |
| | 60203805 | CATCH BASINS, TYPE A, 5'-DIAMETER, TYPE 1 FRAME, OPEN LID | EACH | 2 | | |
| | 60206905 | CATCH BASINS, TYPE C, TYPE 1 FRAME, OPEN LID | EACH | 2 | | |
| | 60218400 | MANHOLES, TYPE A, 4'-DIAMETER, TYPE 1 FRAME, CLOSED LID | EACH | 4 | | |
| | 60221100 | MANHOLES, TYPE A, 5'-DIAMETER, TYPE 1 FRAME, CLOSED LID | EACH | 2 | | |
| | 60223700 | MANHOLES, TYPE A, 6'-DIAMETER, TYPE 1 FRAME, OPEN LID | EACH | 4 | | |
| | 60223800 | MANHOLES, TYPE A, 6'-DIAMETER, TYPE 1 FRAME, CLOSED LID | EACH | 5 | | |
| | 60224446 | MANHOLES, TYPE A, 7'-DIAMETER, TYPE 1 FRAME, CLOSED LID | EACH | 4 | | |
| | 60224459 | MANHOLES, TYPE A, 8'-DIAMETER, TYPE 1 FRAME, CLOSED LID | EACH | 4 | | |
| | 60224469 | MANHOLES, TYPE A, 9'-DIAMETER, TYPE 1 FRAME, CLOSED LID | EACH | 5 | | |

THE ILLINOIS STATE TOLL HIGHWAY AUTHORITY (TOLLWAY)

CONTRACT NO. I-18-4428

BRIDGE RECONSTRUCTION (BN 261) BURLINGTON NORTHERN SANTA FE (BNSF) RAILWAY OVER

THE TRI-STATE TOLLWAY (I-294)

MILE POST 26.6

SCHEDULE OF PRICES

| SP | PAY ITEM NUMBER | DESIGNATION | UNIT | QUANTITY | UNIT PRICE DOLLAR | AMOUNT DOLLAR |
|---|---|---|---|---|---|---|
| | 60248900 | VALVE VAULTS, TYPE A, 5'-DIAMETER, TYPE 1 FRAME, CLOSED LID | EACH | 2 | | |
| | 60250200 | CATCH BASINS TO BE ADJUSTED | EACH | 1 | | |
| | 60253100 | CATCH BASINS TO BE RECONSTRUCTED WITH NEW TYPE 1 FRAME, CLOSED LID | EACH | 2 | | |
| | 60255800 | MANHOLES TO BE ADJUSTED WITH NEW TYPE 1 FRAME, CLOSED LID | EACH | 1 | | |
| | 60258100 | MANHOLES TO BE RECONSTRUCTED WITH NEW TYPE 1 FRAME, OPEN LID | EACH | 1 | | |
| | 60258200 | MANHOLES TO BE RECONSTRUCTED WITH NEW TYPE 1 FRAME, CLOSED LID | EACH | 2 | | |
| | 60300305 | FRAMES AND LIDS TO BE ADJUSTED | EACH | 3 | | |
| | 60406000 | FRAMES AND LIDS, TYPE 1, OPEN LID | EACH | 3 | | |
| | 60500040 | REMOVING MANHOLES | EACH | 17 | | |
| | 60500050 | REMOVING CATCH BASINS | EACH | 22 | | |
| | 60500060 | REMOVING INLETS | EACH | 1 | | |
| | 60500105 | FILLING MANHOLES | EACH | 1 | | |
| | 60600095 | CLASS SI CONCRETE (OUTLET) | CU YD | 8.0 | | |
| | 60603800 | COMBINATION CONCRETE CURB AND GUTTER, TYPE B-6.12 | FOOT | 2,900 | | |
| | 63200310 | GUARDRAIL REMOVAL | FOOT | 902 | | |
| * | 66900200 | NON-SPECIAL WASTE DISPOSAL | CU YD | 0 | | |
| | 66900205 | SPECIAL WASTE DISPOSAL | CU YD | 0 | | |

## THE ILLINOIS STATE TOLL HIGHWAY AUTHORITY (TOLLWAY)

**CONTRACT NO. I-18-4428**

**BRIDGE RECONSTRUCTION (BN 261) BURLINGTON NORTHERN SANTA FE (BNSF) RAILWAY OVER**

**THE TRI-STATE TOLLWAY (I-294)**

**MILE POST 26.6**

**SCHEDULE OF PRICES**

| SP | PAY ITEM NUMBER | DESIGNATION | UNIT | QUANTITY | UNIT PRICE DOLLAR | AMOUNT DOLLAR |
|---|---|---|---|---|---|---|
| | 66900530 | SOIL DISPOSAL ANALYSIS | EACH | 200 | | |
| BDE | 70300904 | PAVEMENT MARKING TAPE, TYPE IV 4" | FOOT | 94,077 | | |
| | 70600280 | IMPACT ATTENUATORS, TEMPORARY (SEVERE USE,NARROW), TEST LEVEL 3 | EACH | 8 | | |
| | 70600370 | IMPACT ATTENUATORS, RELOCATE (SEVERE USE, NARROW), TEST LEVEL 3 | EACH | 82 | | |
| | 72100100 | SIGN PANEL OVERLAY | SQ FT | 22 | | |
| | 72400200 | REMOVE SIGN PANEL ASSEMBLY - TYPE B | EACH | 1 | | |
| | 72400330 | REMOVE SIGN PANEL - TYPE 3 | SQ FT | 96 | | |
| | 72400720 | RELOCATE SIGN PANEL - TYPE 2 | SQ FT | 20 | | |
| | 72400730 | RELOCATE SIGN PANEL - TYPE 3 | SQ FT | 96 | | |
| | 72700100 | STRUCTURAL STEEL SIGN SUPPORT - BREAKAWAY | POUND | 912 | | |
| | 73000100 | WOOD SIGN SUPPORT | FOOT | 18 | | |
| | 73400100 | CONCRETE FOUNDATIONS | CU YD | 2.4 | | |
| | 73700100 | REMOVE GROUND MOUNTED SIGN SUPPORT | EACH | 2 | | |
| | 73700200 | REMOVE CONCRETE FOUNDATION - GROUND MOUNT | EACH | 2 | | |
| | 78000100 | THERMOPLASTIC PAVEMENT MARKING - LETTERS AND SYMBOLS | SQ FT | 7.0 | | |
| | 78000200 | THERMOPLASTIC PAVEMENT MARKING - LINE 4" | FOOT | 2,090 | | |
| | 78000600 | THERMOPLASTIC PAVEMENT MARKING - LINE 12" | FOOT | 66 | | |

THE ILLINOIS STATE TOLL HIGHWAY AUTHORITY (TOLLWAY)

CONTRACT NO. I-18-4428

BRIDGE RECONSTRUCTION (BN 261) BURLINGTON NORTHERN SANTA FE (BNSF) RAILWAY OVER

THE TRI-STATE TOLLWAY (I-294)

MILE POST 26.6

SCHEDULE OF PRICES

| SP | PAY ITEM NUMBER | DESIGNATION | UNIT | QUANTITY | UNIT PRICE DOLLAR | AMOUNT DOLLAR |
|---|---|---|---|---|---|---|
| | 78005110 | EPOXY PAVEMENT MARKING - LINE 4" | FOOT | 12,544 | | |
| | 78005130 | EPOXY PAVEMENT MARKING - LINE 6" | FOOT | 9,408 | | |
| | 78005150 | EPOXY PAVEMENT MARKING - LINE 12" | FOOT | 1,111 | | |
| | 81028180 | UNDERGROUND CONDUIT, GALVANIZED STEEL, 1 1/4" DIA. | FOOT | 6 | | |
| | 81028210 | UNDERGROUND CONDUIT, GALVANIZED STEEL, 2 1/2" DIA. | FOOT | 138 | | |
| | 81028730 | UNDERGROUND CONDUIT, COILABLE NONMETALLIC CONDUIT, 1 1/4" DIA. | FOOT | 729 | | |
| | 81702110 | ELECTRIC CABLE IN CONDUIT, 600V (XLP-TYPE USE) 1/C NO. 10 | FOOT | 549 | | |
| | 81702130 | ELECTRIC CABLE IN CONDUIT, 600V (XLP-TYPE USE) 1/C NO. 6 | FOOT | 1,617 | | |
| | 81800400 | AERIAL CABLE, 4-1/C NO. 2 WITH MESSENGER WIRE | FOOT | 2,648 | | |
| | 83600200 | LIGHT POLE FOUNDATION, 24" DIAMETER | FOOT | 53 | | |
| | 84200600 | REMOVAL OF LIGHTING UNIT, NO SALVAGE | EACH | 4 | | |
| | 84200804 | REMOVAL OF POLE FOUNDATION | EACH | 4 | | |
| | 87900100 | DRILL EXISTING FOUNDATION | EACH | 2 | | |
| * | X0300015 | CONCRETE WINGWALL REMOVAL | EACH | 4 | | |
| GBSP | X0320051 | CROSSHOLE SONIC LOGGING ACCESS DUCTS | FOOT | 9,070 | | |
| GBSP | X0320052 | CROSSHOLE SONIC LOGGING TESTING | EACH | 3 | | |
| * | X0322584 | REVETMENT MAT REMOVAL | SQ YD | 333 | | |

## THE ILLINOIS STATE TOLL HIGHWAY AUTHORITY (TOLLWAY)

### CONTRACT NO. I-18-4428

### BRIDGE RECONSTRUCTION (BN 261) BURLINGTON NORTHERN SANTA FE (BNSF) RAILWAY OVER

### THE TRI-STATE TOLLWAY (I-294)

### MILE POST 26.6

### SCHEDULE OF PRICES

| SP | PAY ITEM NUMBER | DESIGNATION | UNIT | QUANTITY | UNIT PRICE DOLLAR | AMOUNT DOLLAR |
|---|---|---|---|---|---|---|
| * | X0322916 | PROPOSED STORM SEWER CONNECTION TO EXISTING STORM SEWER | EACH | 1 | | |
| * | X0322917 | PROPOSED STORM SEWER CONNECTION TO EXISTING MANHOLE | EACH | 3 | | |
| * | X0322924 | RETAINING WALL REMOVAL | SQ FT | 589 | | |
| * | X0324761 | DRAINAGE SYSTEM (SPECIAL) | L SUM | 1 | | |
| * | X0325110 | BIAXIAL GEOGRID | SQ YD | 18,724 | | |
| * | X0325815 | REMOVE EXISTING CABLE | FOOT | 364 | | |
| * | X0326801 | COMBINED SEWERS TO BE CLEANED | FOOT | 1,275 | | |
| * | X0326804 | COMBINED SEWER REMOVAL 42" | FOOT | 607 | | |
| * | X0326998 | FURNISH AND INSTALL HANDRAIL | FOOT | 1,270 | | |
| * | X0327141 | LIGHTING STANDARD, TYPE 4A | EACH | 2 | | |
| * | X0327142 | LIGHTING STANDARD, TYPE 4B | EACH | 2 | | |
| * | X0327149 | RELOCATE BENCH | EACH | 1 | | |
| * | X0327267 | SLOPE INCLINOMETER | EACH | 2 | | |
| * | X0327357 | CONSTRUCTION VIBRATION MONITORING | L SUM | 1 | | |
| * | X0327754 | TEMPORARY BULKHEAD | EACH | 6 | | |
| * | X0795800 | COARSE AGGREGATE | TON | 12,837 | | |
| * | X0800003 | COARSE AGGREGATE BACKFILL (SPECIAL) | CU YD | 2,110 | | |

## THE ILLINOIS STATE TOLL HIGHWAY AUTHORITY (TOLLWAY)

**CONTRACT NO. I-18-4428**

**BRIDGE RECONSTRUCTION (BN 261) BURLINGTON NORTHERN SANTA FE (BNSF) RAILWAY OVER**

**THE TRI-STATE TOLLWAY (I-294)**

**MILE POST 26.6**

**SCHEDULE OF PRICES**

| SP | PAY ITEM NUMBER | DESIGNATION | UNIT | QUANTITY | UNIT PRICE DOLLAR | AMOUNT DOLLAR |
|---|---|---|---|---|---|---|
| GBSP | X0900064 | MEMBRANE WATERPROOFING SYSTEM FOR BURIED STRUCTURES | SQ YD | 2,542 | | |
| * | X1200080 | STORM SEWERS JACKED IN PLACE, 48" (SPECIAL) | FOOT | 296 | | |
| * | X1200140 | PRECAST CONCRETE BOX CULVERT (SPECIAL) | FOOT | 1,043 | | |
| * | X2200003 | FENCE (SPECIAL) | FOOT | 1,930 | | |
| * | X5030225 | CONCRETE STRUCTURES (SPECIAL) | CU YD | 36 | | |
| * | X5210015 | ELASTOMERIC BEARING ASSEMBLY, TYPE I (SPECIAL) | EACH | 64 | | |
| * | X5210025 | ELASTOMERIC BEARING ASSEMBLY, TYPE II (SPECIAL) | EACH | 16 | | |
| * | X5537500 | STORM SEWERS TO BE CLEANED 6" | FOOT | 167 | | |
| * | X5538000 | STORM SEWERS TO BE CLEANED 18" | FOOT | 63 | | |
| * | X5538400 | STORM SEWERS TO BE CLEANED 30" | FOOT | 272 | | |
| * | X5610651 | ABANDON EXISTING WATER MAIN, FILL WITH CLSM | FOOT | 1,793 | | |
| * | X6020293 | MANHOLES, TYPE A, 8'-DIAMETER, WITH 2 TYPE 1 FRAME, CLOSED LID, RESTRICTOR PLATE | EACH | 1 | | |
| * | X6020710 | CATCH BASIN TO BE ADJUSTED WITH SPECIAL FRAME AND GRATE | EACH | 2 | | |
| * | X6022850 | MANHOLE, SANITARY, 8' DIAMETER, TYPE 1 FRAME, CLOSED LID | EACH | 2 | | |
| * | X6022900 | CATCH BASINS TO BE RECONSTRUCTED (SPECIAL) | EACH | 2 | | |
| * | X6024200 | MANHOLES, TYPE A, 6'-DIAMETER, TYPE 1 FRAME, CLOSED LID, SPECIAL | EACH | 1 | | |
| * | X6026051 | SANITARY MANHOLES TO BE RECONSTRUCTED | EACH | 1 | | |
| * | X6026054 | SANITARY MANHOLES TO BE REMOVED | EACH | 2 | | |

## THE ILLINOIS STATE TOLL HIGHWAY AUTHORITY (TOLLWAY)

**CONTRACT NO. I-18-4428**

**BRIDGE RECONSTRUCTION (BN 261) BURLINGTON NORTHERN SANTA FE (BNSF) RAILWAY OVER**

**THE TRI-STATE TOLLWAY (I-294)**

**MILE POST 26.6**

**SCHEDULE OF PRICES**

| SP | PAY ITEM NUMBER | DESIGNATION | UNIT | QUANTITY | UNIT PRICE DOLLAR | AMOUNT DOLLAR |
|---|---|---|---|---|---|---|
| * | X6028000 | MANHOLES TO BE RECONSTRUCTED (SPECIAL) | EACH | 1 | | |
| * | X6040205 | FRAMES AND LIDS, SPECIAL | EACH | 2 | | |
| * | X6640050 | CHAIN LINK FENCE, 42" ATTACHED TO STRUCTURE (SPECIAL) | FOOT | 1,683 | | |
| * | X6640312 | CHAIN LINK GATES TO BE REMOVED AND RE-ERECTED | EACH | 2 | | |
| * | X7015005 | CHANGEABLE MESSAGE SIGN | CAL DAY | 365 | | |
| BDE | X7030005 | TEMPORARY PAVEMENT MARKING REMOVAL | SQ FT | 31,359 | | |
| * | X7200053 | REMOVE, STORE AND RE-ERECT SIGN PANEL (SPECIAL) | EACH | 29 | | |
| * | X7330086 | FURNISH AND INSTALL WALKWAY | FOOT | 3,917 | | |
| * | X8140105 | HANDHOLE (SPECIAL) | EACH | 2 | | |
| * | X8300001 | LIGHT POLE, SPECIAL | EACH | 2 | | |
| * | X8950130 | MODIFY EXISTING LIGHTING CONTROLLER | EACH | 1 | | |
| * | XX004360 | SANITARY SEWER BYPASS PUMPING | L SUM | 1 | | |
| * | Z0022800 | FENCE REMOVAL | FOOT | 644 | | |
| * | Z0033024 | MAINTAIN EXISTING LIGHTING SYSTEM | L SUM | 1 | | |
| * | Z0040000 | PIEZOMETER | EACH | 4 | | |
| * | Z0040530 | PIPE UNDERDRAIN REMOVAL | FOOT | 2,112 | | |
| GBSP | Z0046304 | PIPE UNDERDRAIN FOR STRUCTURES 4" | FOOT | 1,474 | | |

## THE ILLINOIS STATE TOLL HIGHWAY AUTHORITY (TOLLWAY)

**CONTRACT NO. I-18-4428**

**BRIDGE RECONSTRUCTION (BN 261) BURLINGTON NORTHERN SANTA FE (BNSF) RAILWAY OVER**

**THE TRI-STATE TOLLWAY (I-294)**

**MILE POST 26.6**

**SCHEDULE OF PRICES**

| SP | PAY ITEM NUMBER | DESIGNATION | UNIT | QUANTITY | UNIT PRICE DOLLAR | AMOUNT DOLLAR |
|---|---|---|---|---|---|---|
| GBSP | Z0046306 | PIPE UNDERDRAIN FOR STRUCTURES 6" | FOOT | 414 | | |
| * | Z0056648 | STORM SEWERS, TYPE 1, WATER MAIN QUALITY PIPE, 12" | FOOT | 33 | | |
| * | Z0056650 | STORM SEWERS, TYPE 1, WATER MAIN QUALITY PIPE, 15" | FOOT | 36 | | |
| * | Z0056668 | STORM SEWERS, TYPE 2, WATER MAIN QUALITY PIPE, 12" | FOOT | 67 | | |
| * | Z0056670 | STORM SEWERS, TYPE 2, WATER MAIN QUALITY PIPE, 18" | FOOT | 49 | | |
| * | Z0057950 | SANITARY SEWER 42" | FOOT | 615 | | |
| * | Z0065100 | SETTLEMENT PLATFORMS | EACH | 7 | | |
| * | Z0075400 | TIE RODS | EACH | 43 | | |
| * | Z0075496 | CONCRETE RETAINING WALL REMOVAL | FOOT | 1,171 | | |
| * | JI211110 | TOPSOIL EXCAVATION AND PLACEMENT | CU YD | 1,000 | | |
| * | JI211112 | TOPSOIL EXCAVATION AND DISPOSAL | CU YD | 18,380 | | |
| * | JI211126 | TOPSOIL FURNISH AND PLACE, 6" | SQ YD | 74,346 | | |
| * | JI213004 | EXPLORATION TRENCH, UTILITIES (HAND EXCAVATION) | FOOT | 100 | | |
| * | JI213006 | EXPLORATION TRENCH, UTILITIES (VACUUM EXCAVATION) | FOOT | 100 | | |
| * | JI406107 | ASPHALT TACK COAT | POUND | 4,475 | | |
| * | JI406510 | WARM-MIX ASPHALT SURFACE COURSE, MIX "D", N70 | TON | 1,012 | | |
| * | JI408100 | ASPHALT DAMP PROOFING | SQ YD | 903 | | |

## THE ILLINOIS STATE TOLL HIGHWAY AUTHORITY (TOLLWAY)

### CONTRACT NO. I-18-4428

### BRIDGE RECONSTRUCTION (BN 261) BURLINGTON NORTHERN SANTA FE (BNSF) RAILWAY OVER

### THE TRI-STATE TOLLWAY (I-294)

### MILE POST 26.6

### SCHEDULE OF PRICES

| SP | PAY ITEM NUMBER | DESIGNATION | UNIT | QUANTITY | UNIT PRICE DOLLAR | AMOUNT DOLLAR |
|---|---|---|---|---|---|---|
| * | JI420900 | DRILL AND GROUT #6 TIE BARS | EACH | 93 | | |
| * | JI440010 | CONCRETE MEDIAN BARRIER AND BASE REMOVAL | FOOT | 653 | | |
| * | JI481060 | AGGREGATE SHOULDERS, TYPE B 4" | SQ YD | 14 | | |
| * | JI481070 | AGGREGATE SHOULDERS, SPECIAL TYPE C | TON | 86 | | |
| * | JI481130 | AGGREGATE SHOULDERS WITH FILTER FABRIC, TYPE B 4" | SQ YD | 701 | | |
| * | JI482112 | WARM-MIX ASPHALT SHOULDERS (9 IN.) | SQ YD | 9,221 | | |
| * | JI503230 | MASS CONCRETE STRUCTURES | CU YD | 450.4 | | |
| * | JI542010 | END SECTION REMOVAL | EACH | 2 | | |
| * | JI580001 | RAILROAD DECK WATERPROOFING | SQ FT | 18,884 | | |
| * | JI593030 | ABANDON AND FILL EXISTING STORM SEWER | CU YD | 152 | | |
| * | JI601215 | SLOPE DRAIN, 15" | FOOT | 89 | | |
| * | JI601300 | PIPE UNDERDRAINS, 6" (SPECIAL) | FOOT | 16 | | |
| * | JI601320 | PIPE UNDERDRAINS, FABRIC LINED TRENCH 6" | FOOT | 2,469 | | |
| * | JI602117 | CATCH BASINS, TYPE G-2, TYPE G-2 MODIFIED FRAME AND GRATE | EACH | 14 | | |
| * | JI602184 | CATCH BASINS, TYPE A, 4'-DIAMETER, TYPE 20A FRAME AND GRATE | EACH | 2 | | |
| * | JI602367 | MANHOLE, TYPE A, 10'-DIAMETER, TYPE 20A FRAME AND GRATE | EACH | 4 | | |
| * | JI602368 | MANHOLE, TYPE A, 10'-DIAMETER, WITH TWO TYPE 1 FRAME, CLOSED LID, RESTRICTOR PLATE | EACH | 1 | | |

THE ILLINOIS STATE TOLL HIGHWAY AUTHORITY (TOLLWAY)

CONTRACT NO. I-18-4428

BRIDGE RECONSTRUCTION (BN 261) BURLINGTON NORTHERN SANTA FE (BNSF) RAILWAY OVER

THE TRI-STATE TOLLWAY (I-294)

MILE POST 26.6

SCHEDULE OF PRICES

| SP | PAY ITEM NUMBER | DESIGNATION | UNIT | QUANTITY | UNIT PRICE DOLLAR | AMOUNT DOLLAR |
|---|---|---|---|---|---|---|
| * | JI602791 | JUNCTION CHAMBER, LOCATION 1 | EACH | 1 | | |
| * | JI606015 | GUTTER, TYPE G-2, MODIFIED | FOOT | 2,875 | | |
| * | JI606020 | GUTTER, TYPE G-3 | FOOT | 471 | | |
| * | JI630002 | GALVANIZED STEEL PLATE BEAM GUARDRAIL, TYPE A, 6 FOOT POSTS | FOOT | 1,225 | | |
| * | JI631110 | TRAFFIC BARRIER TERMINAL, TYPE T1 (SPECIAL) TANGENT | EACH | 1 | | |
| * | JI631120 | TRAFFIC BARRIER TERMINAL, TYPE T2 | EACH | 3 | | |
| * | JI631135 | TRAFFIC BARRIER TERMINAL, TYPE T6B | EACH | 1 | | |
| * | JI637001 | CONCRETE BARRIER BASE | FOOT | 630 | | |
| * | JI637003 | CONCRETE BARRIER, DOUBLE FACE, 42 INCH | FOOT | 512 | | |
| * | JI664305 | RIGHT-OF-WAY FENCE, TYPE 1, 6' | FOOT | 3,150 | | |
| * | JI664310 | CORNER POST, RIGHT-OF-WAY FENCE, TYPE 1 | EACH | 9 | | |
| * | JI664315 | PULL POST, RIGHT-OF-WAY FENCE, TYPE 1 | EACH | 15 | | |
| * | JI664320 | END POST, RIGHT-OF-WAY FENCE, TYPE 1 | EACH | 11 | | |
| * | JI664325 | PEDESTRIAN GATE, RIGHT-OF-WAY FENCE, TYPE 1 | EACH | 5 | | |
| * | JI664400 | RIGHT OF WAY FENCE REMOVAL | FOOT | 4,596 | | |
| * | JI664620 | TEMPORARY CHAIN LINK FENCE 8' SCREENING, TYPE 2 | FOOT | 7,278 | | |
| * | JI669010 | REGULATED SUBSTANCES PRE-CONSTRUCTION PLAN | L SUM | 1 | | |
| * | JI669015 | ON-SITE MONITORING OF REGULATED SUBSTANCES | CAL DAY | 600 | | |
| * | JI669020 | REGULATED SUBSTANCES FINAL CONSTRUCTION REPORT | L SUM | 1 | | |
| * | JI680004 | HEADWALL TYPE I, 24" | EACH | 1 | | |

## THE ILLINOIS STATE TOLL HIGHWAY AUTHORITY (TOLLWAY)

**CONTRACT NO. I-18-4428**

**BRIDGE RECONSTRUCTION (BN 261) BURLINGTON NORTHERN SANTA FE (BNSF) RAILWAY OVER**

**THE TRI-STATE TOLLWAY (I-294)**

**MILE POST 26.6**

**SCHEDULE OF PRICES**

| SP | PAY ITEM NUMBER | DESIGNATION | UNIT | QUANTITY | UNIT PRICE DOLLAR | AMOUNT DOLLAR |
|---|---|---|---|---|---|---|
| * | JI680011 | HEADWALL TYPE II, 48" | EACH | 1 | | |
| * | JI680122 | SLOPED HEADWALL TYPE III, 15", 1:3 | EACH | 2 | | |
| * | JI680125 | SLOPED HEADWALL TYPE III, 24", 1:3 | EACH | 3 | | |
| * | JI680127 | SLOPED HEADWALL TYPE III, 30", 1:3 | EACH | 1 | | |
| * | JI680140 | SLOPED HEADWALL TYPE III, 6", 1:6 | EACH | 2 | | |
| * | JI680141 | SLOPED HEADWALL TYPE III, 12", 1:6 | EACH | 1 | | |
| * | JI704000 | TEMPORARY CONCRETE BARRIER | FOOT | 6,113 | | |
| * | JI704005 | RELOCATE TEMPORARY CONCRETE BARRIER | FOOT | 58,013 | | |
| * | JI725000 | TERMINAL MARKER - DIRECT APPLIED | EACH | 1 | | |
| * | JI781010 | RAISED PAVEMENT LANE MARKER, REFLECTOR | EACH | 378 | | |
| * | JI782014 | GUARDRAIL BARRIER REFLECTORS, TYPE B | EACH | 13 | | |
| * | JI782022 | BARRIER WALL REFLECTORS, TYPE C | EACH | 141 | | |
| * | JI811276 | CONDUIT ATTACHED TO STRUCTURE, 2" DIA., STAINLESS STEEL | FOOT | 20 | | |
| * | JI830210 | TEMPORARY WOOD POLE, 90 FEET, CLASS 2, TO REMAIN IN PLACE | EACH | 2 | | |
| ** | JS107360 | DUST CONTROL WATERING | UNIT | 330 | | |
| ** | JS120100 | TRAILER MOUNTED FULL MATRIX PORTABLE CHANGEABLE MESSAGE SIGNS | EACH | 2.0 | | |
| ** | JS250220 | SEEDING, CLASS 2E | ACRE | 0.7 | | |

THE ILLINOIS STATE TOLL HIGHWAY AUTHORITY (TOLLWAY)

CONTRACT NO. I-18-4428

BRIDGE RECONSTRUCTION (BN 261) BURLINGTON NORTHERN SANTA FE (BNSF) RAILWAY OVER

THE TRI-STATE TOLLWAY (I-294)

MILE POST 26.6

SCHEDULE OF PRICES

| SP | PAY ITEM NUMBER | DESIGNATION | UNIT | QUANTITY | UNIT PRICE DOLLAR | AMOUNT DOLLAR |
|---|---|---|---|---|---|---|
| ** | JS250314 | SEEDING, CLASS 4B | ACRE | 0.6 | | |
| ** | JS250318 | SEEDING, CLASS 4F | ACRE | 10.2 | | |
| ** | JS250320 | SEEDING, CLASS 5 | ACRE | 10.2 | | |
| ** | JS250324 | SEEDING, CLASS 5B | ACRE | 0.6 | | |
| ** | JS280020 | MANAGEMENT OF EROSION AND SEDIMENT CONTROL | CAL. MO. | 33 | | |
| ** | JS280040 | EROSION AND SEDIMENT CONTROL-CLEANOUT | CU YD | 50 | | |
| ** | JS280050 | SILT FENCE | FOOT | 7,515 | | |
| ** | JS280051 | RE-ERECT SILT FENCE | FOOT | 1,500 | | |
| ** | JS280070 | STABILIZED CONSTRUCTION ENTRANCE | SQ YD | 2,131 | | |
| ** | JS280080 | FLOTATION BOOM | FOOT | 200 | | |
| ** | JS280100 | SUPER SILT FENCE | FOOT | 608 | | |
| ** | JS280120 | TREE PROTECTION | FOOT | 500 | | |
| ** | JS280140 | TEMPORARY RIPRAP | TON | 108 | | |
| ** | JS280151 | SAME-DAY STABILIZATION | SQ YD | 40,366 | | |
| ** | JS280180 | RECTANGULAR INLET PROTECTION | EACH | 6 | | |
| ** | JS280205 | FILTER FABRIC INLET PROTECTION, COVER TYPE | EACH | 12 | | |
| ** | JS280210 | FILTER FABRIC INLET PROTECTION, BASKET TYPE | EACH | 54 | | |

## THE ILLINOIS STATE TOLL HIGHWAY AUTHORITY (TOLLWAY)

### CONTRACT NO. I-18-4428

### BRIDGE RECONSTRUCTION (BN 261) BURLINGTON NORTHERN SANTA FE (BNSF) RAILWAY OVER

### THE TRI-STATE TOLLWAY (I-294)

### MILE POST 26.6

### SCHEDULE OF PRICES

| SP | PAY ITEM NUMBER | DESIGNATION | UNIT | QUANTITY | UNIT PRICE DOLLAR | AMOUNT DOLLAR |
|---|---|---|---|---|---|---|
| ** | JS280305 | TEMPORARY DITCH CHECKS | FOOT | 1,000 | | |
| * | JS670CSP | FIELD OFFICE, TYPE C (SPECIAL) | CAL MO | 36 | | |
| ** | JS671020 | MOBILIZATION, TOLLWAY (MODIFIED) | L SUM | 1 | | |
| * | JS701010 | MAINTENANCE OF TRAFFIC | L SUM | 1 | | |
| ** | JS810242 | CONDUIT ENCASED IN CONCRETE, 6" DIA. PVC | FOOT | 208 | | |
| ** | JS810875 | UNDERGROUND CONDUIT, COILABLE NONMETALLIC CONDUIT, 2" DIA. | FOOT | 1,533 | | |
| ** | JS810879 | UNDERGROUND CONDUIT, COILABLE NONMETALLIC CONDUIT, 4" DIA. | FOOT | 174 | | |
| ** | JS811032 | CONDUIT ATTACHED TO STRUCTURE, 1" DIA., PVC COATED GALVANIZED STEEL | FOOT | 393 | | |
| ** | JS812023 | CONDUIT EMBEDDED IN STRUCTURE, 2" DIA., PVC | FOOT | 45 | | |
| ** | JS812025 | CONDUIT EMBEDDED IN STRUCTURE, 3" DIA., PVC | FOOT | 738 | | |
| ** | JS813001 | JUNCTION BOX, STAINLESS STEEL, EMBEDDED IN STRUCTURE, 20" X 12" X 8" | EACH | 1 | | |
| ** | JS813022 | JUNCTION BOX, STAINLESS STEEL, ATTACHED TO STRUCTURE, 6" X 6" X 4" | EACH | 5 | | |
| ** | JS813053 | JUNCTION BOX, STAINLESS STEEL, ATTACHED TO STRUCTURE, 12" X 10" X 6" | EACH | 1 | | |
| * | JS813083 | JUNCTION BOX, STAINLESS STEEL, ATTACHED TO STRUCTURE, 18" X 18" X 8" | EACH | 2 | | |
| ** | JS814002 | HEAVY-DUTY HANDHOLE, TOLLWAY | EACH | 2 | | |
| ** | JS817211 | ELECTRIC CABLE IN CONDUIT, 600V (XLP-TYPE USE) 1/C NO. 10 | FOOT | 2,206 | | |
| ** | JS817212 | ELECTRIC CABLE IN CONDUIT, 600V (XLP-TYPE USE) 1/C NO. 8 | FOOT | 2,203 | | |

THE ILLINOIS STATE TOLL HIGHWAY AUTHORITY (TOLLWAY)

CONTRACT NO. I-18-4428

BRIDGE RECONSTRUCTION (BN 261) BURLINGTON NORTHERN SANTA FE (BNSF) RAILWAY OVER

THE TRI-STATE TOLLWAY (I-294)

MILE POST 26.6

SCHEDULE OF PRICES

| SP | PAY ITEM NUMBER | DESIGNATION | UNIT | QUANTITY | UNIT PRICE DOLLAR | AMOUNT DOLLAR |
|---|---|---|---|---|---|---|
| ** | JS817215 | ELECTRIC CABLE IN CONDUIT, 600V (XLP-TYPE USE) 1/C NO. 2 | FOOT | 8,804 | | |
| ** | JS821002 | UNDERPASS LUMINAIRE, 150 WATT, HIGH PRESSURE SODIUM VAPOR | EACH | 4 | | |
| ** | JS821003 | TEMPORARY LUMINAIRE, SODIUM VAPOR, HORIZONTAL MOUNT, 400 WATT | EACH | 8 | | |
| ** | JS821110 | UNDERPASS LUMINAIRE, LED | EACH | 4 | | |
| ** | JS830027 | TEMPORARY WOOD POLE, 50 FT., CLASS 4 | EACH | 4 | | |
| ** | JS830030 | TEMPORARY WOOD POLE, 60 FT., CLASS 4 | EACH | 3 | | |
| ** | JS830033 | TEMPORARY WOOD POLE, 70 FT., CLASS 3 | EACH | 1 | | |
| ** | JS830034 | TEMPORARY WOOD POLE, 70 FT., CLASS 3, 15 FT. MAST ARM | EACH | 8 | | |
| * | JS830145 | WOOD POLE, 45 FEET, CLASS 2 | EACH | 5 | | |
| ** | JS836007 | LIGHT POLE FOUNDATION (ROADWAY) MEDIAN, TYPE 3 | EACH | 4 | | |
| ** | JS842100 | REMOVAL OF UNDERPASS LUMINAIRE | EACH | 4 | | |
| ** | JS842105 | POLE FOUNDATION, REMOVED | EACH | 4 | | |
| ** | JS846001 | MAINTAIN LIGHTING SYSTEM | L SUM | 1 | | |
| * | JT130707 | STANDBY GENERATOR AND AUTOMATIC TRANSFER SWITCH | L SUM | 1 | | |
| * | JT130708 | TEMPORARY PORTABLE GENERATOR | L SUM | 1 | | |
| * | JT130709 | WELL HOUSE ELECTRICAL WORK | L SUM | 1 | | |
| * | JT131005 | BUILDING INSPECTIONS | L SUM | 1 | | |

THE ILLINOIS STATE TOLL HIGHWAY AUTHORITY (TOLLWAY)

CONTRACT NO. I-18-4428

BRIDGE RECONSTRUCTION (BN 261) BURLINGTON NORTHERN SANTA FE (BNSF) RAILWAY OVER

THE TRI-STATE TOLLWAY (I-294)

MILE POST 26.6

SCHEDULE OF PRICES

| SP | PAY ITEM NUMBER | DESIGNATION | UNIT | QUANTITY | UNIT PRICE DOLLAR | AMOUNT DOLLAR |
|---|---|---|---|---|---|---|
| * | JT132820 | CCTV CAMERA, ITS ASSEMBLY (TOLLWAY) | EACH | 1 | | |
| * | JT135042 | WEBCAM | EACH | 1 | | |
| * | JT160132 | HANDHOLE FOR SINGLE MODE FIBER OPTIC CABLE, 48"X72"X36" | EACH | 10 | | |
| * | JT211A11 | SUBGRADE AGGREGATE 12 IN. | CU YD | 1,546 | | |
| * | JT280500 | SEDIMENT FILTER BAG | EACH | 30 | | |
| * | JT280510 | FLOC LOG | EACH | 100 | | |
| * | JT280530 | IN-LINE FLOCCULATION SYSTEM | EACH | 3 | | |
| * | JT285055 | ARTICULATED CONCRETE BLOCK REVETMENT SYSTEM, TYPE 1 | SQ YD | 503 | | |
| * | JT311060 | AGGREGATE SUBBALLAST (SPECIAL) | CU YD | 11,033 | | |
| * | JT546000 | TELEVISION INSPECTION OF SEWER | FOOT | 4,380 | | |
| * | JT599040 | REMOVAL OF EXISTING NOISE ABATEMENT WALL | SQ FT | 6,805 | | |
| * | JT599P01 | PERFORMANCE BASED NOISE ABATEMENT WALL (PRECAST CONCRETE) NO. 1 | L SUM | 1 | | |
| * | JT637023 | CONCRETE MEDIAN BARRIER TRANSITION, TYPE V-F | FOOT | 118 | | |
| * | JT701030 | SUPPLEMENTAL BARRICADE | EACH/DAY | 1,000 | | |
| * | JT701031 | SUPPLEMENTAL SIGNING | SQ FT | 200 | | |
| * | JT701032 | SUPPLEMENTAL FLASHING ARROW BOARD (PER DAY) | EACH/DAY | 30 | | |
| * | JT701033 | SUPPLEMENTAL FLASHING ARROW BOARD (PER WEEK) | EACH/WEEK | 4 | | |

## THE ILLINOIS STATE TOLL HIGHWAY AUTHORITY (TOLLWAY)

**CONTRACT NO. I-18-4428**

**BRIDGE RECONSTRUCTION (BN 261) BURLINGTON NORTHERN SANTA FE (BNSF) RAILWAY OVER**

**THE TRI-STATE TOLLWAY (I-294)**

**MILE POST 26.6**

**SCHEDULE OF PRICES**

| SP | PAY ITEM NUMBER | DESIGNATION | UNIT | QUANTITY | UNIT PRICE DOLLAR | AMOUNT DOLLAR |
|---|---|---|---|---|---|---|
| * | JT701034 | SUPPLEMENTAL FLASHING ARROW BOARD (PER MONTH) | EACH/ MONTH | 4 | | |
| * | JT701035 | SUPPLEMENTAL MAINTENANCE OF TRAFFIC | DAY | 30 | | |
| * | JT703104 | LATE SEASON TEMPORARY PAVEMENT MARKING, 4" | FOOT | 243,352 | | |
| * | JT726040 | REMOVE AND REINSTALL MILE POST MARKER | EACH | 2 | | |
| * | JT783005 | WATERBLAST PAVEMENT MARKING REMOVAL WITH VACUUM RECOVERY | SQ FT | 90,051 | | |
| * | JT783009 | RAISED PAVEMENT LANE MARKER, REFLECTOR REMOVAL | EACH | 378 | | |
| * | JT810874 | UNDERGROUND CONDUIT, COILABLE NONMETALLIC CONDUIT, SDR 11, 1 1/2" DIA. | FOOT | 2,575 | | |
| * | JT810881 | UNDERGROUND CONDUIT, COILABLE NONMETALLIC CONDUIT, SDR 11, 6" DIA. | FOOT | 1,322 | | |
| ** | JT830042 | WOOD POLE, 90 FT., CLASS 2 | EACH | 4 | | |
| * | JT844010 | REMOVE AND REINSTALL LIGHTING UNIT | EACH | 4 | | |
| * | JT900442 | CURED-IN-PLACE PIPE LINER, 42" | FOOT | 667 | | |
| * | JT901135 | DEWATERING, SPECIAL | L SUM | 1 | | |
| | | | | | TOTAL AMOUNT OF CORE WORK: | |
| | | | | | | |
| * | JT155001 | CONTRACTOR'S QUALITY PROGRAM | L SUM | 1 | $1,110,000 | $1,110,000.00 |
| | | | | | | |

## THE ILLINOIS STATE TOLL HIGHWAY AUTHORITY (TOLLWAY)

### CONTRACT NO. I-18-4428

### BRIDGE RECONSTRUCTION (BN 261) BURLINGTON NORTHERN SANTA FE (BNSF) RAILWAY OVER

### THE TRI-STATE TOLLWAY (I-294)

### MILE POST 26.6

### SCHEDULE OF PRICES

| SP | PAY ITEM NUMBER | DESIGNATION | UNIT | QUANTITY | UNIT PRICE DOLLAR | AMOUNT DOLLAR |
|---|---|---|---|---|---|---|
| * | JT150100 | CONTRACT SPECIFIED EXTRA WORK ITEMS | UNIT | 100,000 | $ 1.00 | $ 100,000.00 |
| * | JT151500 | CONTRACT ADJUSTMENT ALLOWANCE FOR TEMPERATURE CONTROL OF CONCRETE | UNIT | 75,000 | $ 1.00 | $ 75,000.00 |
| * | JT154005 | EMERGENCY PAVEMENT AND SHOULDER REPAIRS | UNIT | 25,000 | $ 1.00 | $ 25,000.00 |
| * | JT154016 | ALLOWANCE FOR UNFORESEEN EROSION CONTROL MEASURES | UNIT | 20,000 | $ 1.00 | $ 20,000.00 |
| * | JT154045 | CONTRACT ALLOWANCE FOR COLD WEATHER PAVEMENT MARKINGS | UNIT | 50,000 | $ 1.00 | $ 50,000.00 |
| * | JT154051 | CONTRACT ALLOWANCE FOR UNSUITABLE SOIL | UNIT | 6,000,000 | $ 1.00 | $ 6,000,000.00 |
| * | JT154067 | CONTRACT ALLOWANCE FOR CONSTRUCTIONWORKS APPRENTICES | UNIT | 100,000 | $ 1.00 | $ 100,000.00 |
| * | JT154100 | ALLOWANCE FOR SUPPLEMENTAL FLAGGING | UNIT | 300,000 | $ 1.00 | $ 300,000.00 |
| * | JT154103 | ALLOWANCE FOR RAILROAD FLAGGING AND SERVICES | UNIT | 13,000,000 | $ 1.00 | $ 13,000,000.00 |
| * | JT154150 | ALLOWANCE FOR STEEL COSTS ADJUSTMENT | UNIT | 75,000 | $ 1.00 | $ 75,000.00 |
| * | JT154160 | ALLOWANCE FOR FUEL COSTS ADJUSTMENT | UNIT | 50,000 | $ 1.00 | $ 50,000.00 |
| | | | | | | |
| | 999NEG20 | DAMAGE TO ILLINOIS TOLLWAY'S OPERATIONAL FACILITIES PER S.P. 115.5 - TRI-STATE | HOUR | | (10,000) | |
| | 999NEG30 | DAMAGE TO ILLINOIS TOLLWAY'S OPERATIONAL FACILITIES PER S.P. 115.5 - ALL ROADWAYS OFF-PEAK | HOUR | | (2,000) | |
| | 999NEG31 | DAMAGE TO ELECTRICAL FACILITIES PER TOLLWAY SUPPL. SPEC. 107.30 (b) | INC/DAY | | (1,000) | |

## THE ILLINOIS STATE TOLL HIGHWAY AUTHORITY (TOLLWAY)

**CONTRACT NO. I-18-4428**

**BRIDGE RECONSTRUCTION (BN 261) BURLINGTON NORTHERN SANTA FE (BNSF) RAILWAY OVER**

**THE TRI-STATE TOLLWAY (I-294)**

**MILE POST 26.6**

**SCHEDULE OF PRICES**

| SP | PAY ITEM NUMBER | DESIGNATION | UNIT | QUANTITY | UNIT PRICE DOLLAR | AMOUNT DOLLAR |
|---|---|---|---|---|---|---|
| | 999NEG32 | LIQUIDATED DAMAGES FOR DELAY IN SUBMITTAL OF PROGRESS SCHEDULE PER TOLLWAY SUPPL. SPEC. 108.02 (e) | DAY | | (300) | |
| | 999NEG33 | NON-COMPLIANCE WITH EROSION AND SEDIMENT CONTROL PER TOLLWAY SUPPL. SPEC. 280.02 (b) (1) | INC/DAY | | See Note 2 | |
| | 999NEG34 | NON-COMPLIANCE WITH RESPONSIBILITY FOR CONSTRUCTION HAULING EQUIPMENT PER TOLLWAY SUPPL. SPEC. 105.15 | DAY | | (1,000) | |
| | 999NEG35 | FAILURE TO RESPOND TO REGULATORY AGENCY REQUESTS, PER TOLLWAY SUPPL. SPEC. 280.02 (b) (2) | OCCUR | | (25,000) | |
| | 999NEG37 | NON-COMPLIANCE WITH TOLLWAY MAINTENANCE OF TRAFFIC PER TOLLWAY SUPPL. SPEC. 701.01 (b) (1) | INC/DAY | | (2,500) | |
| | 999NEG38 | FAILURE TO RESPOND TO RE-ESTABLISH DEVICES PER TOLLWAY SUPPL. SPEC. 701.01 (b) (2) | OCCUR | | (2,500) | |
| | 999NEG39 | FAILURE TO REPAIR IMPACT ATTENUATORS, TEMPORARY PER TOLLWAY SUPPL. SPEC. 701.01 (b) (3) | OCCUR | | (2,500) | |
| | 999NEG40 | LOSS OR DAMAGE TO TOLLWAY OWNED DEVICES PER TOLLWAY SUPPL. SPEC. 701.01 (b) (4) | SQ. FT. | | (100) | |
| | 999NEG42 | NON-COMPLIANCE WITH MAINTAIN LIGHTING SYSTEM PER TOLLWAY SUPPL. SPEC. 846.06 (a) | INC/DAY | | (1,000) | |
| | 999NEG43 | FAILURE TO RESPOND TO MAINTAIN LIGHTING SYSTEM PER TOLLWAY SUPPL. SPEC. 846.06 (b) | OCCUR | | (1,000) | |
| | 999NEG44 | LIQUIDATED DAMAGES FOR NON-COMPLETION PER S.P. 105.1.1 | CAL DAY | | (12,000) | |
| | 999NEG45 | LIQUIDATED DAMAGES FOR NON-COMPLETION PER S.P. 105.1.2 | CAL DAY | | (42,000) | |
| | 999NEG46 | LIQUIDATED DAMAGES FOR NON-COMPLETION PER S.P. 105.1.3 | CAL DAY | | (12,000) | |
| | 999NEG47 | LIQUIDATED DAMAGES FOR NON-COMPLETION PER S.P. 105.1.4 | CAL DAY | | (62,000) | |
| | 999NEG48 | LIQUIDATED DAMAGES FOR NON-COMPLETION PER S.P. 105.1.5 | CAL DAY | | (62,000) | |

## THE ILLINOIS STATE TOLL HIGHWAY AUTHORITY (TOLLWAY)

**CONTRACT NO. I-18-4428**

**BRIDGE RECONSTRUCTION (BN 261) BURLINGTON NORTHERN SANTA FE (BNSF) RAILWAY OVER**

**THE TRI-STATE TOLLWAY (I-294)**

**MILE POST 26.6**

**SCHEDULE OF PRICES**

| SP | PAY ITEM NUMBER | DESIGNATION | UNIT | QUANTITY | UNIT PRICE DOLLAR | AMOUNT DOLLAR |
|---|---|---|---|---|---|---|
| | 999NEG49 | DAMAGE TO FIBER OPTIC UTILITIES PER S.P. 115.3 | OCCUR | | (10,000) | |
| | 999NEG52 | FAILURE TO RESPOND FOR PATCHING BARRICADES PER PORTLAND CEMENT CONCRETE PATCHING SPECIAL PROVISION | OCCUR | | (500) | |
| | 999NEG53 | NON-COMPLIANCE WITH CONTRACTOR QUALITY PROGRAM SPECIAL PROVISION | OCCUR | | (1,000) | |
| | 999NEG54 | DAMAGE TO TOLLWAY MULTI-MODE CABLE, DMS SIGNS, CAMERAS, TELECOMMUNICATION, CABLE, ELECTRICAL, WATER AND SEWER PER S.P. 115.4 | OCCUR | | (1,000) | |
| | 999NEG90 | ONE LANE OR RAMP BLOCKED PER S.P. FAILURE TO OPEN LANES TO TRAFFIC | 15 MINUTES | | (3,000) | |
| | | **ADJUSTMENTS** | | | | |
| | 999ADJ20 | PROTECTION METHOD I FOR CONCRETE IN SUBSTRUCTURES, CULVERTS, PUMP HOUSES, AND RETAINING WALLS AS PER IDOT Article 503.22 | CU YD | | See Note 1 | |
| | 999ADJ21 | PROTECTION METHOD II FOR CONCRETE IN SUBSTRUCTURES, CULVERTS, PUMP HOUSES, AND RETAINING WALLS AS PER IDOT Article 503.22 | CU YD | | See Note 1 | |
| | 999ADJ24 | PROTECTION METHODS I, II or III FOR CONCRETE IN FOOTINGS AS PER IDOT Article 503.22 | CU YD | | See Note 1 | |
| | 999ADJ25 | PROTECTION METHODS I FOR CONCRETE IN SLOPE WALLS AS PER IDOT Article 503.22 | SQ YD | | See Note 1 | |

## THE ILLINOIS STATE TOLL HIGHWAY AUTHORITY (TOLLWAY)

### CONTRACT NO. I-18-4428

### BRIDGE RECONSTRUCTION (BN 261) BURLINGTON NORTHERN SANTA FE (BNSF) RAILWAY OVER THE TRI-STATE TOLLWAY (I-294)

### MILE POST 26.6

### SCHEDULE OF PRICES

| SP | PAY ITEM NUMBER | DESIGNATION | UNIT | QUANTITY | UNIT PRICE DOLLAR | AMOUNT DOLLAR |
|---|---|---|---|---|---|---|
| | 999ADJ45 | CONSTRUCTIONWORKS APPRENTICES WAGE RATE | HOUR | | 15.00 | |
| | | TOTAL AMOUNT OF CONTRACTOR'S QUALITY PROGRAM (CQP) + CONTINGENCY WORK | | | | 15,465,000 |

| | |
|---|---|
| TOTAL AMOUNT OF CORE WORK + AMOUNT OF CONTRACTOR'S QUALITY PROGRAM + TOTAL AMOUNT OF CONTINGENCY WORK = TOTAL AMOUNT OF BASE BID | |
| BID CREDIT | |
| AWARD CRITERIA | |

LEGEND FOR SP COLUMN

| | |
|---|---|
| * | INDICATES SPECIAL PROVISION |
| ** | INDICATES TOLLWAY SUPPLEMENTAL SPECIFICATIONS |
| *** | INDICATES IDOT RECURRING SPECIAL PROVISION |
| BDE | INDICATES IDOT BDE SPECIAL PROVISION |
| GBSP | INDICATES IDOT GUIDE BRIDGE SPECIAL PROVISION |

**Note 1: The Contractor should leave the unit price value blank. The unit price will be entered by the Tollway after receipt of bids.**

**Note 2: The Contractor should leave the unit price value blank. The deduction base value is $1,000.00 and will be adjusted by a Gravity Adjustment Factor according to Article 280.02(b)(1) Table A of the Supplemental Specifications, assessed for each infraction.**

**ILLINOIS STATE TOLL HIGHWAY AUTHORITY (Illinois Tollway)**
**SPECIAL PROVISIONS**
**CONTRACT NUMBER I-18-4428**

**BRIDGE RECONSTRUCTION CARRYING THE**
**BURLINGTON NORTHERN SANTA FE RAILWAY (BNSF)**
**OVER THE TRI-STATE TOLLWAY (I-294)**
**MILE POST 26.6**

## S.P. 101 LOCATION AND SCOPE OF WORK

The improvements to be constructed under this contract shall be performed along the Tri-State (I-294) Tollway at Mile Post 26.6 in Cook County, Illinois.

The work under this contract includes, but is not limited to:

1.) Replacement of structure carrying the BNSF Railroad over the Tri-State Tollway (BN 261);
2.) Temporary shoo-fly structure carrying the BNSF Railroad over the Tri-State Tollway;
3.) Shoulder reconstruction and widening;
4.) Mainline pavement patching as necessary;
5.) Drainage improvements and culvert extensions;
6.) Temporary earth embankment supporting temporary railroad tracks;
7.) Ground improvements consisting of timber piling;
8.) Permanent and Temporary retaining walls;
9.) Erosion control measures and landscaping improvements;
10.) Maintenance of Traffic;
11.) Temporary and permanent lighting;

The following work will require design by the contractor as it is included in this contract as a performance specification:

1.) Performance Based Noise Abatement Wall (Precast Panels) No.1

All applicable provisions of the IDOT Standard Specifications adopted April 1, 2016, herein after referred to as the Standard Specifications, IDOT Supplemental Specifications and Recurring Special provisions adopted January 1, 2019, Illinois Tollway Supplemental Specifications to said Standard Specifications issued April 5, 2019, and all Illinois Tollway Construction Bulletins in effect at the time of bidding, shall govern this work except as herein amended.

Throughout construction, the Contractor will be required to set up a track monitoring program to detect track settlement or movements within the limits of disturbed soils as part of this contract. Lateral and vertical readings must be taken, to an accuracy of 0.001 feet. Top of track readings shall be taken at 50-ft intervals in areas where small amount of new embankment fill is placed, and at 25-ft centers where large amounts of embankment fill is placed, or as directed by the Engineer. In addition, along the length of each sheet piling segment a minimum of three cross sections shall be recorded. Each cross-section shall monitor the top of the piling and the top of each rail. Additionally, the Contractor shall monitor the settlement or movement of the existing abutments. Lateral and vertical readings must be taken at three points on each abutment. These readings will be dated, recorded, and reported to the Engineer. The frequency of readings shall be daily to detect any movements so that corrective measures can be initiated immediately. The track monitoring for the shoring system and the monitoring of the existing abutments shall continue until final grade conditions are complete. The monitoring program, including a plan showing the location of all monitoring points, must be reviewed and approved by the Engineer. The work associated for track monitoring will not be measured for payment.

Railroad Crossing Identification Information
DOT/AAR Crossing #: 079518E
Railroad Mile Post: 16.01
RR Division: Chicago
City/County/State: Hinsdale & Western Springs/DuPage and Cook/Illinois

Contact information listed below.

Burlington Northern Santa Fe Railway Co. (BNSF)

Jones Lang LaSalle Brokerage, Inc.
Attn: Permit Services
4200 Buckingham, Ste.110
Ft. Worth, TX 76155
P: (817) 230-2600
F: (817) 306-8265
Temporary Occupancy Permit Application Fee: $800 (Plus anticipated expedited fee of approximately $7,500.00).
Temporary Occupancy Permit: $5,000 (estimated, to be determined by Railroad At time of Permit Approval).
Private Crossing Permit Fee: $800
Flagging: $1,300/Normal Day (additional fee applies for overtime)

Additional information provided for convenience. However, the Contractor shall be responsible to verify the accuracy of the information by checking the BNSF website at the following link: http://www.bnsf.com/about-bnsf/faqs.html

Contractor shall note that the flagging services require one hour of set-up and one hour of take down every day in addition to the Contractor's work time.

- Wang Engineering, Inc., Tollway Contract I-18-4428, Structural Geotechnical Report, Burlington Northern and Santa Fe Railroad Embankment and Retaining Walls, Cook County, Illinois, dated October 4, 2017 (Revised May 7, 2019).
- Wang Engineering, Inc., Tollway Contract I-18-4428, Structural Geotechnical Report, Flagg Creek Culvert Extension Beneath the BNSF Railroad, Cook County, Illinois, dated May 25, 2017
- Wang Engineering, Inc., Tollway Contract I-18-4428, Structural Geotechnical Report, Culvert Extension at M.P. 26.7, Cook County, Illinois, dated May 24, 2017
- Wang Engineering, Inc., Tollway Contract I-18-4428, Structural Geotechnical Report, Flagg Creek Channel Culvert along the BNSF Railroad, Cook County, Illinois, dated May 23, 2017 (Revised April 25, 2019)
- Wang Engineering, Inc., Tollway Contract I-18-4428, Structural Geotechnical Report, Temporary Retaining Wall along the BNSF Railroad, Cook County, Illinois, dated May 23, 2017
- Wang Engineering, Inc., Tollway Contract I-18-4428, Structural Geotechnical Report, Burlington Northern and Santa Fe Railroad Bridge over Interstate 294, Illinois Tollway BN 261, Cook County, Illinois, dated March 22, 2017 (Revised February 28, 2018).

## S.P. 120 AVAILABLE RECORD DRAWINGS

The following is a list of record drawings that are available for review on the Illinois Tollway On-Line Plan Room.

- **Tri-State Tollway – I-294**
  - I-294 Original Construction – **Contract T-5A**, 1957
  - I-294 Widening & Resurfacing – **Contract GRRS-72-152**, 1972
  - I-294 Signing Improvements – **Contract GRS-74-234**, 1975
  - I-294 Guardrail Rehabilitation – **Contract GRE-78-299**, 1980
  - I-294 Roadway Resurfacing – **Contract GRE-83-070**, 1983
  - I-294 ROW Fencing Improvements – **Contract GRE-84-313**, 1984
  - I-294 Roadway Rehabilitation – **Contract CIP-660**, 1992
  - I-294 Noise Walls – **Contract CIP-668B**, 1993
  - I-294 Roadway Rehabilitation – **Contract RR-99-8101**, 2001
  - I-294 Roadway Rehabilitation - **Contract RR-11-5634 & RR-11-5635**, 2012

- **Bridge 261 – Burlington Northern Santa Fe Railway Bridge over I-294**
  - I-294 Original Construction – **Contract T-5A**, 1957
  - Bridge Construction – **Contract T-5A**, 1957
  - Bridge Repairs – **Contract GRRS-72-152**, 1972
  - Bridge Repairs – **Contract CIP-660**, 1992

## S.P. 121 ELECTRONIC DATA FILES AVAILABLE

Computer Aided Design & Drafting (CADD), Digital Terrain Model (DTM) and Triangulated Irregular Network (TIN) files developed for this project are available

on the Illinois Tollway's online plan room. The Illinois Tollway does not guarantee the accuracy of the below listed files, and the Contractor is responsible to perform all work according to the Plans, Special Provisions and the Standard Specifications. Upon downloading any of listed the electronic files from the online plan room the Contractor agrees the data is not a portion of the contract documents and are for information only, thus the Illinois Tollway shall not be liable for the completeness or accuracy of that data, and any discrepancies between these files and the contract documents are not grounds for claims for compensation or delays.

The Contractor agrees to defend, hold harmless and indemnify the Illinois Tollway, its officers, directors, employees, agents, and consultants from any and all claims resulting from, or in any way related to the use or modification of electronic data and files provided hereunder, by the Contractor, or by any third party obtaining the listed files.

| File Name | Description |
|---|---|
| 4428-3D-prstr.dgn | 3D Bridge model |
| 4428-3D-rdy-001.dgn | 3D Proposed corridor & ditches |
| 4428-3D-rr-001.dgn | 3D Final conditions |
| 4428-3D-rr-002.dgn | 3D Temporary conditions |
| 4228-pr-terrain-model.dgn | 3D Proposed subgrade & grading |
| 4228-terrain-model.dgn | 3D Existing terrain |
| 4428-3D-util.dgn | 3D Existing Utilities |
| 4428-drain-SUDA.dgn | 3D Drainage elements |
| 4428-drain-interim-SUDA.dgn | 3D Interim Drainage elements |
| 4428-3D-prstr.dxf | 3D Bridge model |
| 4428-3D-rdy-001.dxf | 3D Proposed corridor & ditches |
| 4428-3D-rr-001.dxf | 3D Final conditions |
| 4428-3D-rr-002.dxf | 3D Temporary conditions |
| 4228-pr-terrain-model.dxf | 3D Proposed subgrade & grading |
| 4228-terrain-model.dxf | 3D Existing terrain |
| 4428-3D-util.dxf | 3D Existing Utilities |
| 4428-drain-SUDA.dxf | 3D Drainage elements |
| 4428-drain-interim-SUDA.dxf | 3D Interim Drainage elements |

## EARTH AND ROCK EXCAVATION

**Description.** This work shall consist of the excavation and transportation of excavated material to embankment locations throughout the limits of the contract to store on as a temporary basis, and the transportation and disposal of excavated material according to Section 202 and 669 of the Standard Specifications except as modified herein. This work also includes the placement of material at embankment locations in accordance with the Illinois Tollway special provision for Embankment. This work does not include excavation for structures or channel excavation, however, includes the transportation and disposal of excavated material for structures or channel excavation described below.

**Contractor's Responsibility.** Fourteen days prior to the start of any activities that disturb any soil, the Contractor shall prepare and submit a Material Disposal Plan(s) for review and approval by the Engineer that properly environmentally characterizes, details quantities ~~of~~ and prescribes proper disposal methods and locations of all materials excavated on the project site. The Material Disposal Plan(s) shall meet all applicable requirements of Articles 669.05 and 669.06 of the Standard Specification. Contractors performing this work shall meet the requirements of Article 669.03 of the Standard Specifications. The plan should include testing requirements, proposed testing locations to provide sufficient analytical data to accurately evaluate and characterize the soils to be excavated, frequency of tests, description and documentation of testing data and analysis, and soil classification results, including documentation, as applicable, to produce and deliver to the Tollway a Non-Special Waste Certification meeting the requirements of Article 669.10, and/or properly signed and sealed IEPA Form LPC 663 in order to allow for proper disposal of these materials. The testing and reports described above are applicable for all three conditions identified below and are required at different times during the project. The final version of the Material Disposal Plan shall include a Final Environmental Construction Report in accordance with Article 669.14 of the Standard Specifications.

The on-site monitoring included below applies to conditions 2 and 3 under revised Article 202.03 described below:

> Prior to beginning excavation, the Contractor shall mark the limits of removal for approval by the Engineer. Once excavation begins, the work and work area involving regulated substances shall be monitored by qualified personnel. The qualified personnel shall be on-site continuously during excavation and loading of material containing regulated substances. The qualified personnel shall be equipped with either a photoionization detector (PID) (minimum 10.6eV lamp), or a flame ionization detector (FID), and other equipment, as appropriate, to monitor for potential contaminants associated with volatile organic compounds (VOCs) or semi-volatile organic compounds (SVOCs). The PID or FID meter shall be calibrated on-site and background level readings taken and recorded daily, and as field and weather conditions change. Any field screen reading on the PID or FID in excess of background levels indicates the potential presence of contaminated material requiring handling as a non-special waste, special waste, or hazardous waste. PID or FID readings may be used as the basis of increasing the limits of removal with the approval of the Engineer but shall in no case be used to decrease the limits.
>
> The qualified personnel shall document field activities, including the name(s) of personnel conducting the monitoring, weather conditions, PID or FID calibration records, a list of equipment used on-site, a narrative of activities completed, photo log sheets, manifests and landfill tickets, monitoring results, how regulated substances were managed and other

pertinent information.

Samples will be collected in accordance with the Material Disposal Plan. Samples shall be analyzed for the contaminants of concern (COCs), including pH, based on the property's land use history, the encountered abnormality and/or the parameters listed in the maximum allowable concentration (MAC) for chemical constituents in uncontaminated soil established pursuant to Subpart F of 35 Ill. Adm. Code 1100.605. The analytical results shall serve to document the level of contamination.

Revise Article 202.03 of the Standard Specifications to read:

**"202.03 Removal and Disposal of Surplus, Unsuitable Materials, and Organic Waste.** The following conditions shall apply for excavated material included in this Contract;

1. Existing In-Situ Excavated Material located within Railroad Right-of-Way: All existing in-situ excavated material within the Railroad Right-of-Way as shown in the plans, shall be classified according to Article 669.09 (a)(5) and disposed of as such. Reclassification and/or re-use of this material according to Article 669.09 (a)(1) thru (4) will not be permitted and disposal of this material at a CCDD is not allowed. The Contractor shall perform a SOIL DISPOSAL ANALYSIS testing in locations and at the frequencies provided in the approved Material Disposal Plan and submit test results and report manifests to the Engineer as part of the approved Material Disposal Plan. These tests will only be used to demonstrate the environmental properties of the soils to and allow acceptance of the material by a disposal facility licensed to accept non-special waste. The transportation and disposal of this material will be considered non-special waste disposal and measured for payment as described below. The contractor shall produce and deliver to the Tollway a Non-Special Waste Certification meeting the requirements of Article 669.10.

   The locations on the plans where this material is anticipated to be excavated include the following:

   a) Existing Railroad Embankment, including ballast and sub-ballast material;
   b) Existing Railroad embankment for installation of timber ground improvements;
   c) Pipe jacking operations;
   d) Drilled shaft excavation for retaining walls;
   e) Excavation for Installation of Temporary or Permanent Retaining Walls;
   f) Drilled shaft excavation for bridge abutments;
   g) Excavation for installation of Box Culvert #1 and #2;
   h) Ballast for Shoo-Fly railroad tracks;
   i) Excavation of unsuitable material.

2. Existing In-Situ Excavated Material located within Tollway and Village or Park District Right-of-Way: All existing in-situ excavated material within the Tollway Right-of-Way and Village or Park District Right-of-Way shall be tested and classified according to Article 669.09. Contractor shall perform a SOIL DISPOSAL ANALYSIS testing in these locations and at the frequencies provided in the approved Material Disposal Plan and submit test results and report manifests to the Engineer as part of the approved Material Disposal Plan that classify the soils according to 669.09. In addition, unsuitable material, including excavated material from sewer trenches or other underground construction, shall be

excavated or removed and replaced with material as shown on the plans. Unsuitable material shall not be used in embankments. Whenever possible, all excess material shall be disposed of according to Special Provision UNCONTAMINATED SOIL DISPOSAL located elsewhere within these Special Provisions. The contractor shall produce and deliver to the Tollway a Non-Special Waste Certification meeting the requirements of Article 669.10, and/or properly signed and sealed IEPA Form LPC 663 in order to allow for proper disposal of these materials. In the event this material is determined to be Non-Special or Special Waste, it shall be measured for payment according to Tollway Supplement Specification Article 109.04.

Suitable excavated materials of any moisture content shall not be wasted without permission of the Engineer. The Contractor shall dispose of all surplus, unsuitable materials, and organic waste, in such a manner that public or private property will not be damaged or endangered. Suitable but excessively moist excavated materials if used for embankment may be treated in accordance with the Illinois Tollway special provision for Embankment to obtain the specified compaction levels.

Suitable earth, stones and boulders naturally occurring within the right-of-way may be placed in fills or embankments in lifts and compacted according to the Special Provision EMBANKMENT located elsewhere within these Special Provisions. Broken concrete pavement and structural concrete excavated from the job-site without protruding metal bars, bricks, rock stone, sand or soils generated from the construction activities shall be transported to processing stations or mobile crushers for the material to be crushed and screened as either a porous granular embankment aggregate, a porous granular subbase aggregate, a recycled coarse aggregate for concrete pavements, or as a recycled coarse aggregate for cement treated bases. Broken concrete from other sources may be used in embankment or in fill. Reclaimed asphalt pavement with no expansive aggregate (such as steel slag or blast furnace slag), or uncontaminated dirt and sand generated from construction or demolition activities may be used in embankment or in fill In areas supporting roadway pavement (not permitted to be used as embankment supporting the permanent or shoo-fly railroad) the placement of reclaimed asphalt pavement shall only be allowed when ambient air temperature is 40°F and rising. If used in fills or embankments, these materials shall be processed, placed and compacted to the satisfaction of the Engineer; shall be buried under a minimum of 2 feet of earth cover (except when the materials include only uncontaminated dirt); and shall not create an unsightly appearance or detract from the natural topographic features of an area. Broken concrete without protruding metal bars, bricks, rock, or stone from other sources may be used as riprap as approved by the Engineer. If the materials are used for fill in locations within the right-of-way but outside project construction limits, as approved by the Engineer, the Contractor must specify to the Engineer, in writing, how the landscape restoration of the fill areas will be accomplished. Placement of fill in such areas shall not commence until the Contractor's landscape restoration plan is approved by the Engineer.

Aside from the materials listed above, all other construction and demolition debris or waste shall be disposed of in a licensed landfill, recycled, reused, or otherwise disposed of as allowed by State or Federal laws and regulations. All uncontaminated soil with a pH between 6.25 and 9.0 shall be disposed of according to Special Provision UNCONTAMINATED SOIL DISPOSAL located elsewhere within these Special Provisions.

3. Excavation and Disposal of Furnished or Borrow Embankment: All excavation and disposal of material installed as part of FURNISHED EXCAVATION, BORROW EXCAVATION, and embankment installed as part of the temporary retaining walls or other items of work, shall be classified according to Article 669.09. Contractor shall perform a SOIL DISPOSAL ANALYSIS testing in these locations for this material and at the frequencies provided in the approved Material Disposal Plan and submit test results and report manifests to the Engineer as part of the approved Material Disposal Plan that classify these soils according to 669.09. It is expected that this material will qualify ~~for~~ as uncontaminated material and disposed of according to Special Provision UNCONTAMINATED SOIL DISPOSAL located elsewhere in the Special Provisions. The contractor shall produce and deliver to the Tollway a Non-Special Waste Certification meeting the requirements of Article 669.10, and/or properly signed and sealed IEPA Form LPC 663 in order to allow for proper disposal of these materials. In the event this material is determined to be Non-Special or Special Waste, it shall be measured for payment according to Tollway Supplement Specification Article 109.04.

Revise the first paragraph of Article 202.07(b) to read as follows:

"(b) Measured Quantities. Earth and rock excavation will be measured in their original positions, and the volumes in cubic yards computed by the method of average end areas. The volume of any unsuitable material removed will be measured for payment in cubic yards."

Revise the fourth paragraph of Article 202.08 to read as follows:

When the contract does not contain a pay item for removal and disposal of unsuitable material or non-special waste disposal, and the item is required, it will be paid for according to Article 109.04 of the Illinois Tollway Supplemental Specifications.

Revise the twelfth paragraph of Article 669.16 to read as follows:

Payment for temporary staging, if required, will not be measured for payment.

Add the following to Article 202.08:

The preparation, revision, update, administration, and execution of the Material Disposal Plan will be paid for at the lump sum price for REGULATED SUBSTANCES PRE-CONSTRUCTION PLAN.

On-site monitoring of regulated substances will be paid for at the contract unit price per calendar day, or faction thereof, for ON-SITE MONITORING OF REGULATED SUBSTANCES.

The work of preparing, submitting and administering a Regulated Substances Final Construction Report will be paid for at the contract lump sum price REGULATED SUBSTANCES FINAL CONSTRUCTION REPORT.

When the waste material for disposal requires sampling for disposal acceptance, the

samples shall be analyzed for TCLP VOCs, SVOCs, RCRA metals, pH, flash point, and paint filter. The analysis will be paid for at the contract unit price per each for SOIL DISPOSAL ANALYSIS using EPA Methods 1311 (extraction), 8260B for VOCs, 8270C for SVOCs, 6010B and 7470A for RCRA metals, 9045C for pH, 1030 for flash point, and 9095A for paint filter. This price shall include transporting the sample from the job site to the laboratory.

| Pay Item Number | Designation | Unit of Measure |
|---|---|---|
| 20200100 | EARTH EXCAVATION | CU YD |
| 20201200 | REMOVAL AND DISPOSAL OF UNSUITABLE MATERIAL | CU YD |
| 66900530 | SOIL DISPOSAL ANALYSIS | CU YD |
| JI669010 | REGULATED SUBSTANCES PRE-CONSTRUCTION PLAN | L SUM |
| JI669015 | ON-SITE MONITORING OF REGULATED SUBSTANCES | CAL DAY |
| JI669020 | REGULATED SUBSTANCES FINAL CONSTRUCTION REPORT | L SUM |

## UNCONTAMINATED SOIL DISPOSAL

**Description.** This work shall consist of the off-site disposal of uncontaminated soil generated by the construction activities of the project at a pre-approved Illinois Tollway location, and does not address uncontaminated soil that is targeted for reuse by the Illinois Tollway. Contractor shall test material, analyze, and determine classification according to the requirements included in the Special Provision EARTH AND ROCK EXCAVATION located elsewhere within the Special Provisions, and provide a properly signed and sealed IEPA Form LPC 663 in order to allow for proper disposal of these materials.

**Excess Illinois Tollway Uncontaminated Soil Disposal Procedures.**. The Contractor shall provide the IEPA LPC 663 forms to the Engineer for coordination with the Contractor's chosen regulated receiving facilities. The Contractor is expected to use one or more of the Illinois Tollway's pre-approved uncontaminated soil disposal facilities. . Should a Contractor elect to use an alternate facility for uncontaminated soil disposal, the Contractor shall be responsible for all testing, trucking, and tipping fees for proper disposal of all accepted loads and proper disposal of all rejected loads.

It shall be the Contractor's responsibility to select one or more CCDD and uncontaminated soil disposal facilities, if the contractor chooses to dispose of CCDD or uncontaminated soil at a regulated facility. The Contractor shall be responsible for collecting and analyzing a soil sample for pH from an area with no Potential Impacted Properties (PIPs), as identified in IEPA Form 662. One soil pH is sufficient from each 662 stretch between PIPs, and the pH must have a pH between 6.25 and 9.0 to be sent to an CCDD or uncontaminated soil facility. The pH samples shall be collected in areas void of any limestone base, which means a minimum of 2 ft below ground surface, and analyzed by accredited outside laboratory or other method approved by the receiving facility. The Contractor shall stage and transport material to the receiving facility and is responsible for coordination with such facilities on operating hours. Additionally, the Contractor shall verify and record all loads to be transported to a CCDD and uncontaminated soil disposal facility with a Photo Ionization Detector (PID) that is calibrated on a daily basis. Only soils with a PID reading at or less than the ambient background reading shall be shipped to a CCDD or uncontaminated soil fill site.

In the event that the disposal facility rejects the material, or in the event this material is determined to be classified other than CCDD or uncontaminated soil, the material shall be disposed of in a licensed landfill, as allowed by State or Federal laws and regulations. The disposal of the rejected load shall be measured for payment according to Tollway Supplement Specification Article 109.04. It is expected that the Contractor coordinate with these facilities prior to delivering material.

**Method of Measurement.** This work will not be measured for payment.

**Basis for Payment.** The off-site disposal of uncontaminated soil including pH testing, PID verification, transportation, facility disposal fees and all other work necessary, will not be paid for but is included in the contract unit price per cubic yard of EARTH EXCAVATION. Rejected loads, shall be transported to an accepting facility at a location designated by the Engineer, at no additional cost to the Illinois Tollway.

Disposal of material classified other than CCDD or uncontaminated soil shall be measured for payment according to Tollway Supplement Specification Article 109.04.

## EMBANKMENT

**Description.** The work shall consist of the construction of embankments by depositing, placing, and compacting earth, stone, gravel, or other materials of acceptable quality above the natural ground surface or other surface. This work also includes modifying the moisture content of the suitable embankment material to achieve the specified compaction by drying, adding water, or by chemical treatments.

The work shall be in accordance with Sections 202, 204, and 205 of the Standard Specifications except as modified herein, and in accordance with the Illinois Tollway special provision for Embankment Modification when chemical treatments are applied.

Embankments shall be constructed in zones in accordance with the Plans.

1. Zone "A" Embankment is defined as the structural embankment required for support of the railroad shoofly tracks and permanent tracks. Zone A is also defined as the areas outside the Structural components of all Temporary or Permanent Retaining Walls, Pile Support Embankment or Bridge Abutments of which the limits are shown on the plans.

2. Zone "B" Embankment consists of those portions of the complete embankment lying between the foreslopes of Zone "A" Embankment and the neat line slopes of the complete embankment section. Zone B Embankment will not be allowed.

**Material.**

1. <u>Embankment Source Submittal Requirements</u>

Unless otherwise specified in the contract plans, proposed earth excavation, borrow excavation and furnished excavation locations are to be designated by the Contractor and approved by the Engineer prior to their use.

The Contractor shall submit the following information to the Engineer for approval no later than 30 days prior to the planned start of work at each area:

a) Location map for the proposed excavation:
   a. Property boundaries
   b. Planned excavation extents
   c. Access locations
   d. Planned depths and quantity of excavation
   e. Contractor's proposed sampling locations for geotechnical and environmental testing.

b) Narrative describing the planned use, schedule and quantities planned for the excavation.

c) The Contractor shall provide a properly signed and sealed IEPA Form LPC 662 or 663 form for each borrow or furnish source.

d) Written permission for the Illinois Tollway and Engineer to enter the non-job site property to collect earth excavation and furnished excavation soil samples for geotechnical and environmental testing.

2. Zone "A" Embankment Material

Zone "A" Embankment material shall be as required in Sections 202, 204, and 205 of the Standard Specifications, except as follows.

All onsite material used for Zone "A" Embankment must be approved by the Engineer prior to placing. Where furnished excavation is used, the excavation source location, excavation plan, and material must be approved by the Engineer in writing prior to any offsite work.

a) The laboratory Standard Dry Density shall be a minimum of 98 lb/cu ft when determined according to AASHTO T 99 (Method C).

b) The organic content shall be less than ten percent determined according to AASHTO T 194 (Wet Combustion).

c) Soils which demonstrate the following properties shall be restricted to the interior of the embankment and shall be covered on both the sides and top of the embankment by a minimum of 3 feet of soil not considered detrimental in terms of erosion potential or excess volume change.

   1. A grain size distribution with less than 35 percent passing the number 75 um (#200) sieve as tested per AASHTO T 27/T 11.

   2. A plasticity index (PI) of less than 12 as tested per AASHTO T 90.

   3. A liquid limit (LL) in excess of 50 as tested per AASHTO T 89.

d) For each test method listed in Items a through c above, one test will be performed for every 5000 cubic yards of embankment, or as required by the Engineer.

e) The use of Reclaimed Asphalt Pavement (RAP) material within embankment supporting the shoo-fly or permanent railroad will not be permitted.

Zone "A" Embankment material shall be sampled, tested, and approved before use. The contractor shall identify embankment sources, and provide equipment as the Engineer requires, for the collection of samples from those sources. Samples will be furnished to the Engineer a minimum of 14 days prior to use in order that laboratory tests for approval and compaction can be performed. Embankment material placement cannot begin until tests are completed and approval given. The Engineer may collect independent soil samples and perform confirmatory tests prior to approval.

For any Furnished or Borrow Excavation material, the Contractor shall perform and submit to the Engineer for approval, a Standard Proctor test to determine the Standard Dry Density (SDD) and optimum moisture content (OMC) in accordance with Illinois Modified AASHTO

T99, "Moisture-Density Relations of Soils Using a 2.5-kg (5-lb) Rammer and a 305-mm (12-in.) Drop" prior to beginning placement of embankment or furnishing of material onsite.

**Construction Requirements**

1. Placing Zone "A" Embankment Material

Zone "A" Embankment material shall be placed in accordance with Article 205.04 of the Standard Specifications, with the following additional requirements.

In addition to Article 202.03 of the Standard Specifications, broken concrete, , or uncontaminated dirt and sand generated from construction or demolition activities shall be placed in 6-inch lifts and disked with the underlying lift until a uniform homogenous material is formed. This process also applies to the overlaying lifts. The disk must have a minimum blade diameter of 24 inches.

When embankments are to be constructed on hillsides or existing slopes that are steeper than 3H:1V, steps shall be keyed into the existing slope by stepping and benching as shown in the plans or as directed by the engineer.

The requirement for embankment stability in Article 205.04 of the Standard Specifications will be measured with a Dynamic Cone Penetrometer (DCP) according to the test method in the IDOT Geotechnical Manual. The penetration rate must be equal or less than 1.5 inches per blow. In addition, the Contractor shall ensure that stability requirements are met for each lift and shall obtain acceptance by the Engineer prior to advancing the placement of additional material for subsequent lifts.

2. Compaction of Zone "A" Embankment Material

Zone "A" Embankment material shall be compacted in accordance with Article 205.06 of the Standard Specifications, except as follows.

Soils classification for moisture content control will be determined by the Soils Inspector using visual field examination techniques and the IDH Textural Classification Chart.

When tested for density in place each lift shall have a maximum moisture content as follows.
a) A maximum of 110 percent of the optimum moisture for all forms of clay soils.
b) A maximum of 105 percent of the optimum moisture for all forms of clay loam soils.

Each lift of embankment material shall be disked sufficiently to break down oversized clods, mix the different materials, secure uniform moisture content, effectively drying as necessary, and ensure uniform density and compaction.

The Contractor shall disk and dry the embankment material to achieve proper moisture and density. The Contractor will be permitted to use an approved additive to effectively provide a quicker drying time. As soon as acceptable moisture contents are achieved, the Contractor

must complete the compaction of the layer as specified herein and to the satisfaction of the Engineer. No separate payment will be made for this work.

Compacting equipment, compacting operations, and modification procedures shall be coordinated with the rate of placing embankment so the required density is obtained.

**Method of Measurement.** This work will not be measured for payment. Mechanical compaction will not be measured for payment. Standard Proctor Tests and Dynamic Cone Penetrometer test will not be measured for payment.

**Basis of Payment.** This work and any disking and drying, additive or water applied will not be paid for separately but shall be considered as included in the various items of excavation, and their construction shall be included in the unit prices for those items.

## FENCE (SPECIAL)

**Description.** This work shall consist of the complete design, submittal of Working Drawings, furnishing and installing all materials, labor, and equipment necessary to construct a fence at the locations and to the heights and lengths shown in the Plans, in accordance with this Special Provision, the Standard Specifications, and the Contractor's accepted Working Drawings.

The fence shall be SimTek manufactured by CertainTeed or approved equal and shall coordinate the procurement with the Engineer and the Village of Hinsdale. The fence consists of panel, posts, post caps, hardware required to mount the fence including fasteners, foundations and foundation anchor assemblies. The posts shall be constructed galvanized steel.

### REFERENCED STANDARDS

In addition to the Illinois Department of Transportation Standard Specifications and Supplemental Specifications (latest edition), the following specifications and standards shall govern the design, fabrication and construction of Noise Abatement Walls comprised of Precast Concrete.
The standards and specifications shall be the latest edition as revised to the date of the Advertisement for Bids.

1. AASHTO LRFD Bridge Design Specifications, 8th Edition Dated September 2017.

2. AASHTO Standard Specifications for Transportation Materials and Methods of Sampling and Testing.

3. Illinois Department of Transportation All Geotechnical Manual User Memo 11.1: Light Tower, Traffic Signal, Sign Structure Foundation Design, September 2011.

4. Underwriters Laboratories, Inc. (UL):
   a. Building Materials Directory

5. International Conference of Building Officials (ICBO)

6. International Building Code (IBC), 2018 or latest edition, and State of Illinois amendments, referred to herein as Building Code.

7. Illinois Tollway Structure Design Manual, Latest Edition.

Should a conflict occur between the Standard Specifications and another requirement, the Standard Specifications shall govern.

### GENERAL REQUIREMENTS

1. In addition to the complete design and preparation of Working Drawings for the fence, this work shall include a supplemental soil exploration and testing program if required for design refinement. A subsurface soil exploration and testing program has been conducted in the project area. In addition to the boring logs provided in the Contract Plans, the reports, containing the investigations, findings, and recommendations, are available for review on the Illinois Tollway on-line Plan Room. If additional information is required, the Contractor is responsible for obtaining the information at no additional cost to the Illinois Tollway.

2. The Contractor shall identify the Design Consulting Firm, Manufacturer or Supplier of

proprietary fence system that is to perform the design. If the Contractor proposes to utilize more than one firm to provide these services, the Contractor shall identify all proposed firms. The Contractor shall indicate the roles of each of the individual design firms and their subconsultants. The Design Consulting Firm(s) shall meet the following minimum qualifications:

- An Illinois Licensed Structural Engineer or Architect;
- Experience in Illinois Tollway structural design;
- Sufficiently staffed and capable of performing the required structural design in accordance with the Contract documents;
- All insurance requirements as stated in Article 107.27 of the Illinois Tollway Supplemental Specifications.

3. The fence shall be designed to safely support all earth pressures, surcharges and lateral loads, impact loads, wind loads, lateral snow loads and any other temporary or permanent loads. Design horizontal pressures shall account for the direction of wind, height, and elevation of the wall, topography factors and gust factors. The dead load shall consist of the weight of all the component materials making up the Fence. Bearing loads shall be accounted for during all aspects of the walls service life, including but not limited to; fabrication, storage, transportation, placement and final location.

4. The Contractor shall verify the location of all existing utilities and structures and shall take all necessary precautions to perform the work in such a manner as to not damage existing utilities or structures, located near or beneath the fence. Any damage to existing utilities or structures shall be repaired at no additional cost to the Illinois Tollway.

5. Any adjustments to other work items shown in the Plans or additional pay items required to construct the fence per the Contractor's accepted design shall be his responsibility subject to review by the Engineer. Additional costs for any adjustments shall be the responsibility of the Contractor and shall be included in the bid price for the fence.

**DESIGN REQUIREMENTS**
**General**

1. If the fence manufacturer, supplier, or designer needs additional information to complete the design, the Contractor shall be responsible for obtaining such information at no additional cost to the Illinois Tollway.

2. No daylight shall be visible through the fence at locations including the joints, connections, and anchorage systems.

3. Drilled shaft foundation shall be a minimum of six feet below finished grade line or two times the drilled shaft diameter, whichever is greater, unless competent rock is encountered.

4. Drilled shaft foundations may be designed per the requirements as set forth in IDOT All Geotechnical Manual User Memo 11.1: Light Tower, Traffic Signal, Sign Structure Foundation Design using the load combinations as specified herein.

5. Concrete for constructing foundations shall be Class SI conforming to Section 1020 of the Standard Specifications.

6. Reinforcing steel shall be in accordance with Article 1006.10 of the Standard Specifications and shall meet the requirements of ASTM A706, Grade 60. Welded wire fabric shall be in accordance with Article 1006.10 of the Standard Specifications. The reinforcing steel and welded wire fabric for foundations shall be epoxy coated conforming to Article 1006.10 of the Standard Specifications.

7. Post caps, connections, fasteners required for the fence shall be according to the recommendations of the manufacturer. The fence panel and post cap shall be of the same type, color, finish. All fasteners shall be coated with galvanizing material, painted or be of stainless steel.

8. Unless otherwise specified by manufacturer, structural steel shall conform to ASTM A709 (ASSHTO M 270) Grade 36, and as specified in Article 1006.04 of the Standard Specifications. Structural steel exposed to weathering shall be hot-dip galvanized in accordance with ASTM A 123 (AASHTO M 111). Weathering Steel (ASTM A588) is not permitted. Before galvanizing, provide a blast surface as specified in Standard Specification Section 506.07. Grind all cut edges.

9. Posts shall be designed as vertical cantilever beams. Maximum permitted post deflection shall be limited per manufacturer's recommendations. The effects of rotation and deflection at the top of the drilled caisson shall be ignored and only the relative displacement between the top of the caisson and top of post due to the applied loads shall be considered when calculating the deflections. Post shall be installed truly vertical.

10. Permanent stabilizers are required between posts and panels to maintain the vertical positions of the panel while resisting the perpendicular, lateral loading primarily due to wind. The stabilizers shall be spaced at intervals not to exceed 4 feet, and shall be a minimum height of 4 inches, or per manufacturer's recommendations.

11. Paint galvanized steel posts using an approved two-coat paint system, from an approved manufacturer, consisting of an epoxy polyamide as an intermediate coat and an aliphatic urethane as a finish coat. Select colors for the intermediate and finish coat before fabrication. Do not use the system prime coat. Do not mix components from different systems. If a wash primer is used, provide the manufacturer's certification of compatibility with the selected paint system.

**SUBMITTALS**

1. The Fence shall be EcoStone brown pattern as approved by the Engineer. Prior to ordering materials, the Contractor shall submit product technical data, color photos of the fence type and decorative finish. Upon completion of the initial coordination with the Village of Hinsdale, the Contractor shall provide a full-size sample of the fence panel showing the color and finish for Village of Hinsdale acceptance. Fence material shall not be ordered until final acceptance is received.

2. The Contractor shall submit final design calculations and detailed Working Drawings for the Fence no later than 90 days prior to the scheduled start of construction of the fence. Working drawings and calculations shall be prepared and submitted in accordance with Article 105.04 of the Illinois Tollway Supplemental Specifications. Partial and/or incomplete submittals are not allowed and will be returned "Make Corrections as Noted", or "Rejected" if submitted without prior approval of the Engineer. The Contractor shall

consider in his schedule a 14 calendar day period from the date the submittal is received by the Engineer to the expected date of return with comment. This 14-day review period shall be considered with any resubmittal, and such resubmittals shall not be considered cause for an extension of time to the Contract.

3. The design calculations and working drawings shall be submitted under the seal of a Structural Engineer currently licensed by the State of Illinois. The Illinois Tollway reserves the right to require proof of licensure.

4. The design calculations shall demonstrate that the design criteria as set forth in the Contract have been satisfied. They shall be prepared on 8-½ inch x 11 inch pages, which shall be neat, legible, organized and indexed. Pages for calculations and notes shall contain the project designation, date of preparation, initials of the designer, initials of the checker, and the page number at the top of each page.

5. The Working Drawings shall meet ISTHA Computer Aided Plan Preparations (ICAPP) requirements, and include all views, detail, notes, erection sequences, quantities and cross sections necessary to construct the Fence. The Drawings shall be prepared on reproducible sheets 11 inch x 17 inch. The Contractor shall also provide the Engineer with an electronic format copy of the final accepted Drawings including the Structural Engineer seal and signature, in format approved by the Engineer.

6. Post location and spacing for ground mounted walls shall be coordinated with existing and/or proposed drainage structures, storm sewers, and all utilities, and shall be adjusted as necessary to avoid conflicts therewith.

7. Architectural panel treatment, including color, and texture, as appropriate shall be shown.

8. Plans shall show the details for the connection between panels and posts, as well as, the post connection to the foundation, allowed maximum shimmed height including a leveling grout to level and plum panels. A foundation detail shall be shown indicating the reinforcement and post anchorage system.

9. Geotechnical information in the project area not already provided for in the Contract Plans shall be shown.

**FABRICATION, CONSTRUCTION AND ERECTION REQUIREMENTS**

The Contractor shall obtain technical assistance from the System Supplier during the progress of the Work.

**Delivery, Storage, and Handling**

The Contractor shall inspect all materials and allow the Engineer to inspect all materials as the materials arrive at the project site. The Contractor shall follow the System Supplier's recommendations in regards to protecting the materials from mechanical damage and damage due to excessive temperatures, sunlight, moisture, dirt and debris. Any materials damaged during storage or installation shall be promptly replaced at no additional cost to the Illinois Tollway.

All materials are to be stored above ground on level platforms. Cover and protect against wetting prior to use.

Fabrication, construction and erection of the fence shall be accomplished in accordance with the details shown on the approved Working Drawings, this Special Provision, the Standard Specifications, as recommended by the System Supplier, and as approved by the Engineer. Hardware and fasteners shall be installed in accordance with the System Supplier's recommendations and as approved by the Engineer.

Structural steel shall be fabricated and erected in accordance with Section 505 of the Standard Specifications, the System supplier's recommendations and as approved by the Engineer. Shop cleaning and preparation of steel surfaces shall be prepared in accordance with ASTM D6386 after galvanizing. The furnishing, application, and protection of the paint coatings shall be as specified in Standard Specification Section 506 and the paint manufacturer's recommendations. Structural steel coatings shall be according to Section 1008. The first coat shall meet the requirements of Article 1008.05 (d) of the Standard Specifications. The second coat shall meet the requirements of Article 1008.05 (e) except the color shall be a color created by the paint manufacturer that matches the color of the fence panel. The galvanized and two coat paint system shall meet all the requirements of Article 1008.05 (f) of the standard specifications. The coating system shall be evaluated for performance through the National Transportation Product Evaluation Program (NTPEP) for Structural Steel Coatings following the requirements of AASHTO R31 and shall meet the performance criteria listed herein.

**Excavation and Backfill**
Drilled shafts foundations shall be constructed in accordance with Section 516 of the Standard Specifications.

If Unsuitable Material is present at or below the foundation level, it shall be removed per Section 202 of the Standard Specifications. Unsuitable Material shall be any soil material containing vegetable or organic material, such as mulch, peat, or debris such as wood, glass, concrete and brick pieces. In addition to the locations shown on the Plans, Unsuitable Material shall also be any material determined to be unsuitable by the Engineer. Soils classified as Pt, OH, OL, and MH as per the United Soil Classification System shall also be considered Unsuitable Material. All open trenches and holes resulting from excavation, placement of the posts shall be protected.

Underground utilities shall be located and marked to verify adequate clearance from foundations. The Contractor shall consider OSHA clearances for excavations, and overhead obstructions such as wires, cables and roadway/area lighting, prior to wall erection.

**Method of Measurement**. This work will be measured for payment in place in feet.

Non-Special Waste disposal will be measured for payment according to Article 669.15.

**Basis of Payment**. This work will be paid for at the contract unit price per foot for FENCE (SPECIAL). Fence (Special) shall include fence panels, posts and post caps of same material, color, and type, hardware, fasteners, foundations and foundation anchorage, drilling of foundation, disposal of suitable material, all equipment and labor required to complete the work.

Non-Special Waste disposal and soil testing will be paid for according to Article 669.16.

| Pay Item Number | Designation | Unit of Measure |
|---|---|---|
| X2200003 | FENCE (SPECIAL) | FOOT |

## CONCRETE STRUCTURES (SPECIAL)

**Description.** This work shall consist of furnishing and installing, stackable concrete blocks adjacent to permanent Retaining Wall TS26.65R to create material separation walls (material storage bins) within the Village of Western Springs Public Works Yard Facility at the locations directed by the Engineer.

**Materials.** Bin walls shall be stackable and inter-locking to prevent horizontal movement. Each block shall include lifting loops located on the top of each block capable of supporting each block self-weight during lifting and transport operations. The blocks may be either cast-in-place or precast and shall be according to Section 503 or 504 of the Standard Specifications. Concrete shall be Class SI or approved equal. Precast blocks may be similar to Utility Concrete Products, "V-Block226", with dimensions equal to 6-ft long x 2-ft wide x 2-ft high or approved equal. Utility Concrete Products may be accessed at www.utilityconcrete.com. Blocks shall have a smooth normal finish.

**Construction Requirements.** The Contractor shall coordinate the bin layout with the Village of Western Springs. A working drawing shall be submitted to the Engineer for review and acceptance prior to ordering materials. The working drawing shall include plan of the area, including limits of the retaining wall, dimensions showing bin wall spacing, elevation of the bin walls block layout, and miscellaneous details requested by the Village.

It is anticipated that a total of six bin wall lines will be required, consisting of 6-ft high by 18-ft long. It is estimated that each bin wall line will consist of 6-blocks totaling 1 Cubic Yards for each block, or a total of 6 Cubic Yards per bin wall.

Upon delivery, the Engineer shall coordinate with the Village of Western Springs and shall inspect and accept each unit. Accepted units may be installed. Rejected units shall be disposed of by the Contractor at no additional cost to the Tollway.

**Method of Measurement.**_This work will be measured for payment in cubic yards for each block installed and accepted in place.

**Basis of Payment.** This work will be paid for at the contract unit price per cubic yard for CONCRETE STRUCTURES (SPECIAL) which price shall be payment in full for the work described herein including all labor and equipment and any other material required for installation for the material separation bin walls as accepted by the Engineer.

| Pay Item Number | Designation | Unit of Measure |
|---|---|---|
| X5030223 | CONCRETE STRUCTURES (SPECIAL) | CU YD |

## HANDHOLE (SPECIAL)

### DESCRIPTION

This work shall consist of picking up and installing a 6'x6'x4' split manhole or as provided by Century Link.

### INSTALLATION

The Contractor shall pick up handhole material from Century Link located at:
Tollway Maintenance Facility, M-2 (Hillside)

Installation of the handhole shall be in accordance with applicable portions of Section 602 of the Standard Specifications and Section 814 of the Illinois Tollway Supplemental Specifications, and as directed by the Engineer.

### METHOD OF MEASUREMENT

This work will be measured in units of each.

### BASIS OF PAYMENT

This work will be paid for at the contract unit price per each for HANDHOLE (SPECIAL).

| Pay Item Number | Designation | Unit of Measure |
|---|---|---|
| X8140105 | HANDHOLE (SPECIAL) | EACH |

**FIELD OFFICE, TYPE C (SPECIAL) (CTS V 1.0)**

**Description.** This work shall consist of furnishing and maintaining a field office in accordance with Section 670 of the Illinois Tollway Supplemental Specifications except as modified herein.

Replace the seventh paragraph of Article 670.02 with the following:

Parking spaces for not less than 30 passenger cars and/or trucks of not more than 8000 lbs. GVW shall be available at all times adjacent to each field office and laboratory for exclusive use by the Engineer, the Illinois Tollway, the Consulting Engineer (GEC), the Program Management Office (PMO), the Corridor Construction Manager (CCM), other Engineering firms engaged by the Illinois Tollway to work on other projects and their respective employees, agents, and representatives.

Replace Article 670.03(a)(4) with the following:

(4) Washroom Facilities: Minimum of three (3) flush toilets and three (3) wash basins to be provided. If similar nearby washroom facilities are available for use, and are acceptable to the Engineer, washroom facilities need not be provided in the field office.

Add the following to Article 670.03(b):

(5) FIELD OFFICE, TYPE C (SPECIAL)

a. Minimum floor space 2800 square feet.
b. Special features - same as FIELD OFFICE, TYPE B plus the following:
c. Twenty-five (25) 72" x 30" desks and rolling chairs.
d. 250 feet of 13" high x 10" deep shelving.
e. 50 feet of 13" high x 24" deep heavy duty shelving.
f. 12 file cabinets, letter size, 2 drawers.
g. Eight (8) four drawer legal size, insulated file cabinets.
h. Twenty-five (25) clamp-mounted desk lamps.,
i. Rolling, floor rack with capacity for 24 plan clamps along with 24 plan hanging clamps.
j. Coat rack with top shelf 48" long.
k. Four (4) 4' x 8' cork bulletin board.
l. Four (4) 4' x 8' white board.
m. 25" x 20" x 29" Copier stand with two shelves
n. Desk dividers of sufficient quantity to create cubicle arrangement for all desks.
o. 5 drawer steel flat file for plan drawings.
p. 1 refrigerator with a minimum size of 18 cu-ft.
q. Four (4) 72" x 30" folding tables and 20 padded folding chairs for use as working table.

r. One 12' X 5' table and 12 chairs for use in a separate conference/meeting room.

s. In addition to the requirements of Article 670.03 (b) (2) (d), the copier shall be capable of scanning documents in color and printing color copies.

Replace Article 670.05 with the following:

**Method of Measurement.** This work will be measured for payment on a per building or unit basis per month.

Replace Article 670.06 with the following:

**Basis of Payment.** This work will be paid at the contract unit price per each/per calendar month for FIELD OFFICE, TYPE C (SPECIAL), which payment shall constitute full compensation for furnishing the specified office complete with all enumerated equipment and facilities, including maintenance, repairs, and replacement, janitor service, all utility costs, telephone service, and for removal or disposal of the building or mobile unit upon completion of the Contract

| Pay Item Number | Designation | Unit of Measure |
|---|---|---|
| JS670CSP | FIELD OFFICE, TYPE C (SPECIAL) | CAL MO |

Independence Day 2021: 12:00 Noon Saturday July 3rd through 9:00 A.M. Monday July 5th

Christmas Day 2019: 12:00 Noon Monday December 23th through 9:00 A.M. Thursday December 26th
Christmas Day 2020: 12:00 Noon Wednesday December 23th through 9:00 A.M. Saturday December 26th
Christmas Day 2021: 12:00 Noon Thursday December 23th through 9:00 A.M. Monday December 27th

New Year's Day 2019: 12:00 Noon Monday December 31th through 9:00 A.M. Wednesday January 2nd
New Year's Day 2020: 12:00 Noon Tuesday December 31th through 9:00 A.M. Thursday January 2nd
New Year's Day 2021: 12:00 Noon Thursday December 31th through 9:00 A.M. Saturday January 2nd

**LOCAL ROAD MAINTENANCE OF TRAFFIC**
Temporary lane closures along Hillgrove Avenue and Burlington Avenue will be permitted between the hours of 9 AM and 3 PM, Monday through Friday. Weekend hours may not be permitted and shall be coordinated with the Village of Western Springs. The Contractor shall provide all traffic control devices and flaggers as shown on the Highway Standard referenced as indicated on sheets LRD-2 and LRD-11. The Contractor shall provide a proposed master plan schedule for lane closures prior to commencing any construction activities at the onset of the project. The Contractor shall provide the Engineer with 30 days' notice (or as requested by the Village of Western Springs) for temporary lane closure requests on the local roads.

Add the following to Section 701.14 (b) of the Illinois Tollway Supplemental Specifications to include the following:

"Overnight Full-Stop closures will not be permitted for Friday-Saturday and Saturday-Sunday overnight hours."

**Method of Measurement**. This shall conform to Article 701.15 of the Illinois Tollway Supplemental Specifications except as modified as above.

**Basis of Payment**. This shall conform to Article 701.15 of the Illinois Tollway Supplemental Specifications except as modified above.

| Pay Item Number | Designation | Unit of Measure |
|---|---|---|
| JS701010 | MAINTENANCE OF TRAFFIC | L SUM |

defects.

11. The Contractor shall provide assistance to the various equipment manufacturers' field engineers as required in the testing and adjusting of the electrical power and control equipment. Cooperation of the Contractor shall be such that a minimum of time is required for equipment testing.
12. A log shall be maintained for all tests. This log shall be certified before completion of the job, both as to test value and date of test.
13. Any faults in the work performed by the Contractor or in materials or equipment furnished by the Contractor shall be corrected or replaced promptly by the Contractor at no additional cost to the Illinois Tollway.
14. Any faults in materials or equipment furnished by the Contractor which are the result of careless, incompetent or improper handling or installation by the Contractor shall be corrected or replaced promptly by the Contractor at no additional cost to the Illinois Tollway.
15. All tests shall be made and certification of the tests shall be submitted to the Engineer. If any failures occur during the tests, the Contractor shall replace the faulty item and retest.

- Engine-Generator Set Test:
  1. After installation and a reasonable run-in period, and prior to final inspection, the Contractor shall test engine generator set in presence of the Engineer.
  2. The tests shall demonstrate proper operation of the engine generator set, including automatic starting and picking up of load.
  3. The engine generator set shall be operated for one (1) hour at 75 percent load and two (2) hours at a full rated load.
  4. All instruments, test equipment (including load bank), fuel, lube oil, and personnel that are required for tests shall be furnished by the Contractor.
  5. Representatives of the engine generator set manufacturer shall furnish certification in writing that the set has been properly installed and trial operation has been satisfactory. Certification shall be submitted to the Engineer in triplicate before final acceptance.

**System Acceptance**

- Post-installation and post-removal inspection of the entire system will be performed by the Engineer in the presence of a representative of the Contractor.
- Notification of Final Acceptance, after successfully removing all temporary equipment and returning the site to normal operating condition, will be sent to the Contractor in writing (via WBPM) by the Engineer.

**Method of Measurement.** This work will not be measured for payment.

**Basis of Payment**. This work will be paid at Contract price per lump sum for TEMPORARY PORTABLE GENERATOR installed and in use.

Included in this pay item shall be all items and labor necessary for installing, connecting, operating and maintaining the portable generator and associated equipment.

## ALLOWANCE FOR UNSUITABLE SOIL

**Description of Contingent Items.** This Special Provision establishes a budgetary allowance for the transportation and disposal of soil determined to be as Non-Special Waste, Special Waste, or Hazardous Waste, according to the Special Provision EARTH AND ROCK EXCAVATION and Section 669 of the Standard Specification, as scope of work cannot be determined at the time of the Proposal.

## GENERAL REQUIREMENTS

Work shall be done under this item as directed by the Engineer.

**Disposal Fees.** When the extra work performed includes paying for transportation and disposal fees for Non-Special Waste, Special Waste, or Hazardous Waste, the Contractor shall include administrative costs according to Article 109.05 of the Illinois Tollway Supplemental Specifications. No additional allowance will be made for general superintendence, the use of small tools, or other costs for which no specific allowance is herein provided.

**Method of Measurement.** This work will not be measured for payment.

**Basis of Payment.** Payment for this work will be made as specified in Article 109.04 of the Illinois Tollway Supplemental Specifications using a force account basis. Payment for this work will not exceed the costs incurred by the Contractor and approved by the Engineer.

| Pay Item Number | Designation | Unit of Measure |
|---|---|---|
| JT154051 | ALLOWANCE FOR UNSUITABLE SOIL | UNIT |

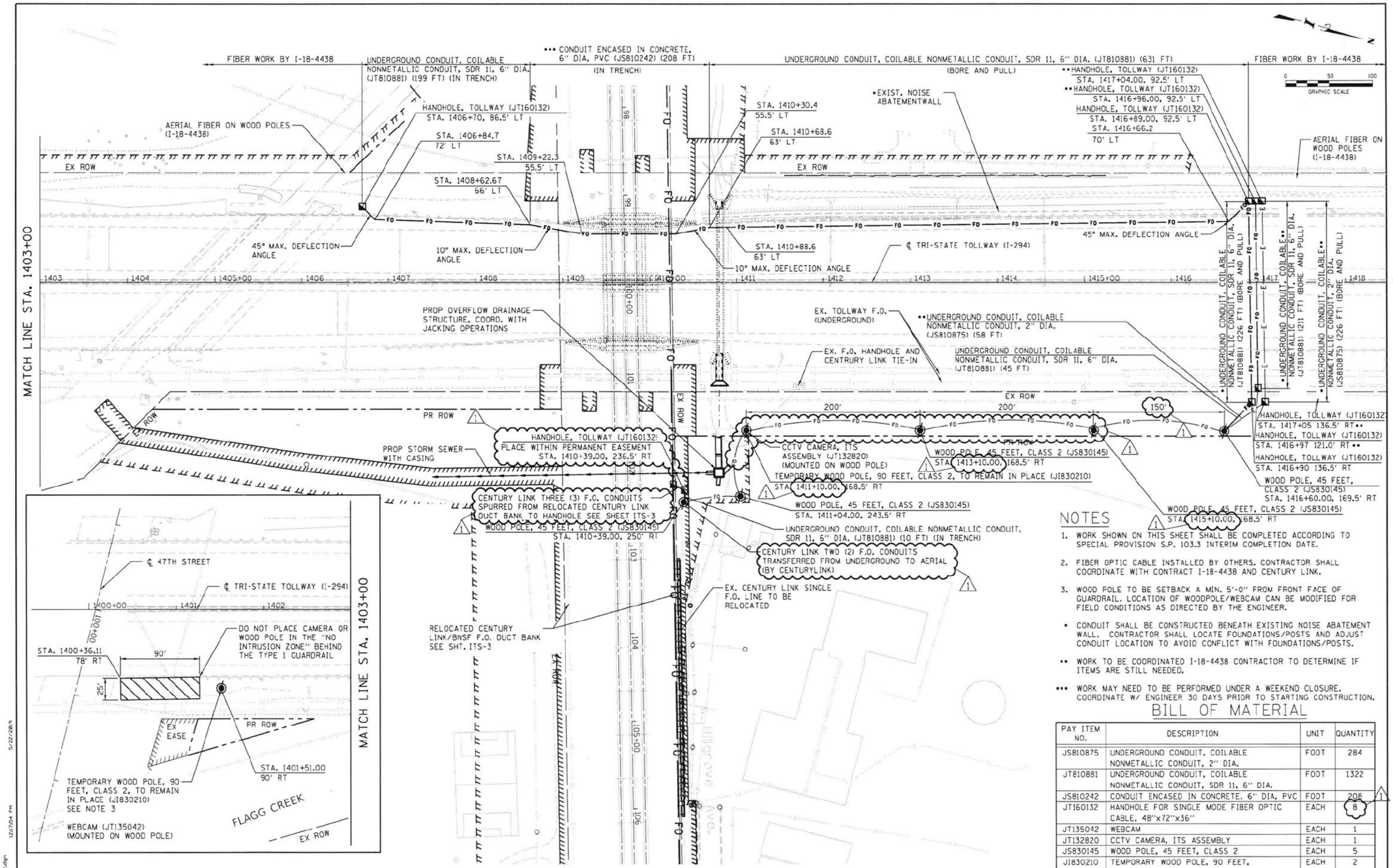


## NOTES

1. WORK SHOWN ON THIS SHEET SHALL BE COMPLETED ACCORDING TO SPECIAL PROVISION S.P. 103.3 INTERIM COMPLETION DATE.
2. FIBER OPTIC CABLE INSTALLED BY OTHERS. CONTRACTOR SHALL COORDINATE WITH CONTRACT I-18-4438 AND CENTURY LINK.
3. WOOD POLE TO BE SETBACK A MIN. 5'-0" FROM FRONT FACE OF GUARDRAIL. LOCATION OF WOODPOLE/WEBCAM CAN BE MODIFIED FOR FIELD CONDITIONS AS DIRECTED BY THE ENGINEER.

• CONDUIT SHALL BE CONSTRUCTED BENEATH EXISTING NOISE ABATEMENT WALL. CONTRACTOR SHALL LOCATE FOUNDATIONS/POSTS AND ADJUST CONDUIT LOCATION TO AVOID CONFLICT WITH FOUNDATIONS/POSTS.

•• WORK TO BE COORDINATED I-18-4438 CONTRACTOR TO DETERMINE IF ITEMS ARE STILL NEEDED.

••• WORK MAY NEED TO BE PERFORMED UNDER A WEEKEND CLOSURE. COORDINATE W/ ENGINEER 30 DAYS PRIOR TO STARTING CONSTRUCTION.

## BILL OF MATERIAL

| PAY ITEM NO. | DESCRIPTION | UNIT | QUANTITY |
|---|---|---|---|
| JS810875 | UNDERGROUND CONDUIT, COILABLE NONMETALLIC CONDUIT, 2" DIA. | FOOT | 284 |
| JT810881 | UNDERGROUND CONDUIT, COILABLE NONMETALLIC CONDUIT, SDR 11, 6" DIA. | FOOT | 1322 |
| JS810242 | CONDUIT ENCASED IN CONCRETE, 6" DIA, PVC | FOOT | 208 |
| JT160132 | HANDHOLE FOR SINGLE MODE FIBER OPTIC CABLE, 48"x72"x36" | EACH | 8 |
| JT135042 | WEBCAM | EACH | 1 |
| JT132820 | CCTV CAMERA, ITS ASSEMBLY | EACH | 1 |
| JS830145 | WOOD POLE, 45 FEET, CLASS 2 | EACH | 5 |
| JI830210 | TEMPORARY WOOD POLE, 90 FEET, CLASS 2, TO REMAIN IN PLACE | EACH | 2 |

| | | | |
|---|---|---|---|
| DRAWN BY JAS | SCALE 1"=50' | Gannett Fleming | THE ILLINOIS STATE TOLL HIGHWAY AUTHORITY<br>2700 OGDEN AVENUE<br>DOWNERS GROVE, ILLINOIS 60515 |
| CHECKED BY DF | DATE 5/9/2019 | | |

REVISIONS

| NO. | DATE | DESCRIPTION |
|---|---|---|
| 1 | 5/24/2019 | ADDENDUM NO. 1 |

CONTRACT NO. I-18-4428

PROPOSED ITS PLAN
STA. 1404+00 TO STA. 1419+75

SHEET NO. ITS-1
DRAWING NO. 235 OF 692

Default
...\442B-sht-its-002.dgn
smuller
5/22/2019
12:17:54 PM

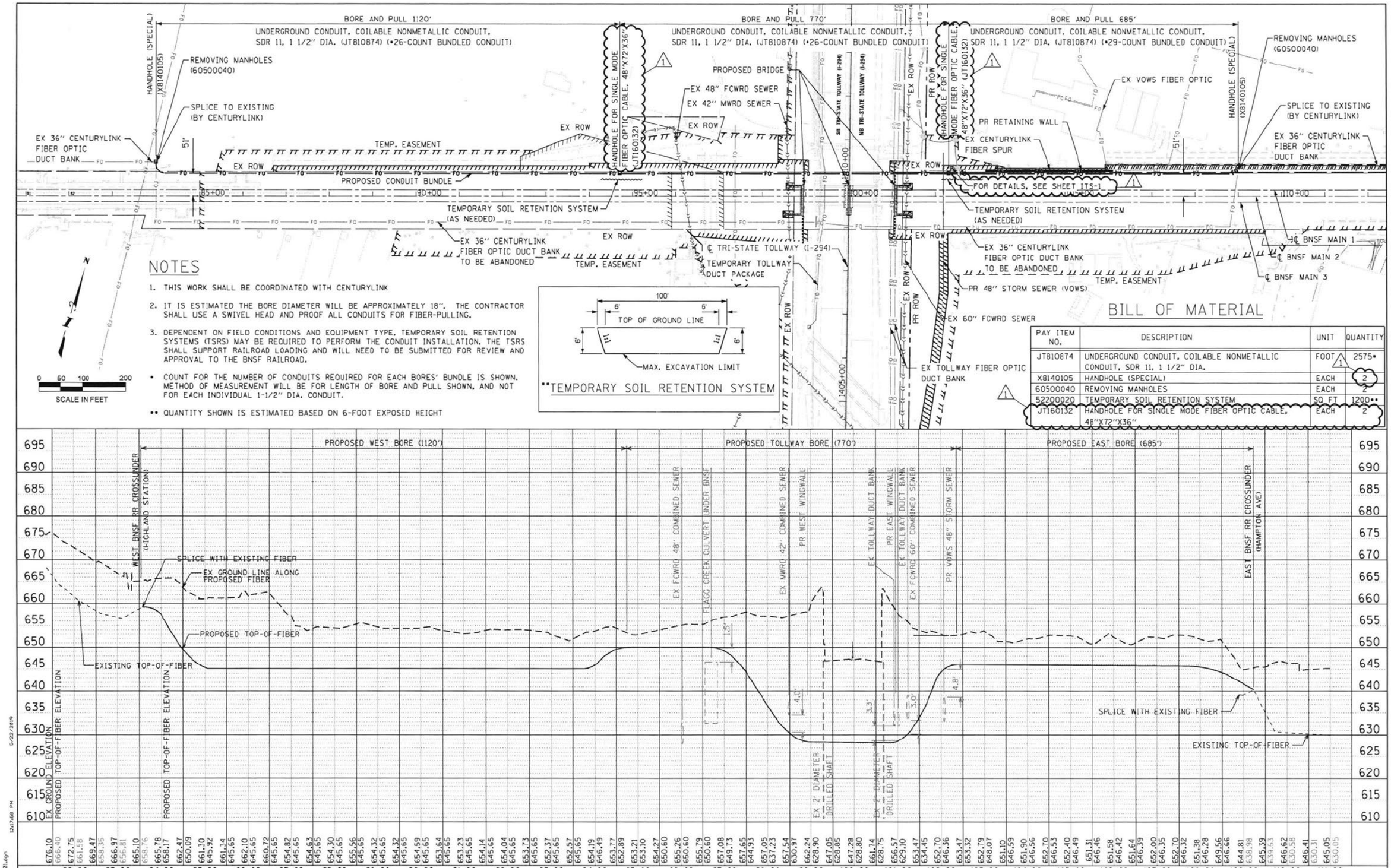


| PAY ITEM NO. | DESCRIPTION | UNIT | QUANTITY |
|---|---|---|---|
| JT810874 | UNDERGROUND CONDUIT, COILABLE NONMETALLIC CONDUIT, SDR 11, 1 1/2" DIA. | FOOT 1 | 2575• |
| X8140105 | HANDHOLE (SPECIAL) | EACH | 2 |
| 60500040 | REMOVING MANHOLES | EACH | 2 |
| 52200020 | TEMPORARY SOIL RETENTION SYSTEM | SQ FT | 1200•• |
| JT160132 | HANDHOLE FOR SINGLE MODE FIBER OPTIC CABLE, 48"X72"X36" | EACH | 2 |

| | | | |
|---|---|---|---|
| DRAWN BY | JAS | SCALE | 1"=100' |
| CHECKED BY | DF | DATE | 5/9/2019 |

Gannett Fleming

THE ILLINOIS STATE TOLL HIGHWAY AUTHORITY
2700 OGDEN AVENUE
DOWNERS GROVE, ILLINOIS 60515

REVISIONS

| NO. | DATE | DESCRIPTION |
|---|---|---|
| 1 | 5/24/2019 | ADDENDUM NO. 1 |

CONTRACT NO. I-18-4428

RELOCATION OVERVIEW PLAN OVER PROFILE
PROPOSED CENTURYLINK CONDUIT

SHEET NO. ITS-3
DRAWING NO. 237 OF 692

5/22/2019 12:17:59 PM
Default
...\4428-sht-its-001.dgn
jmueller

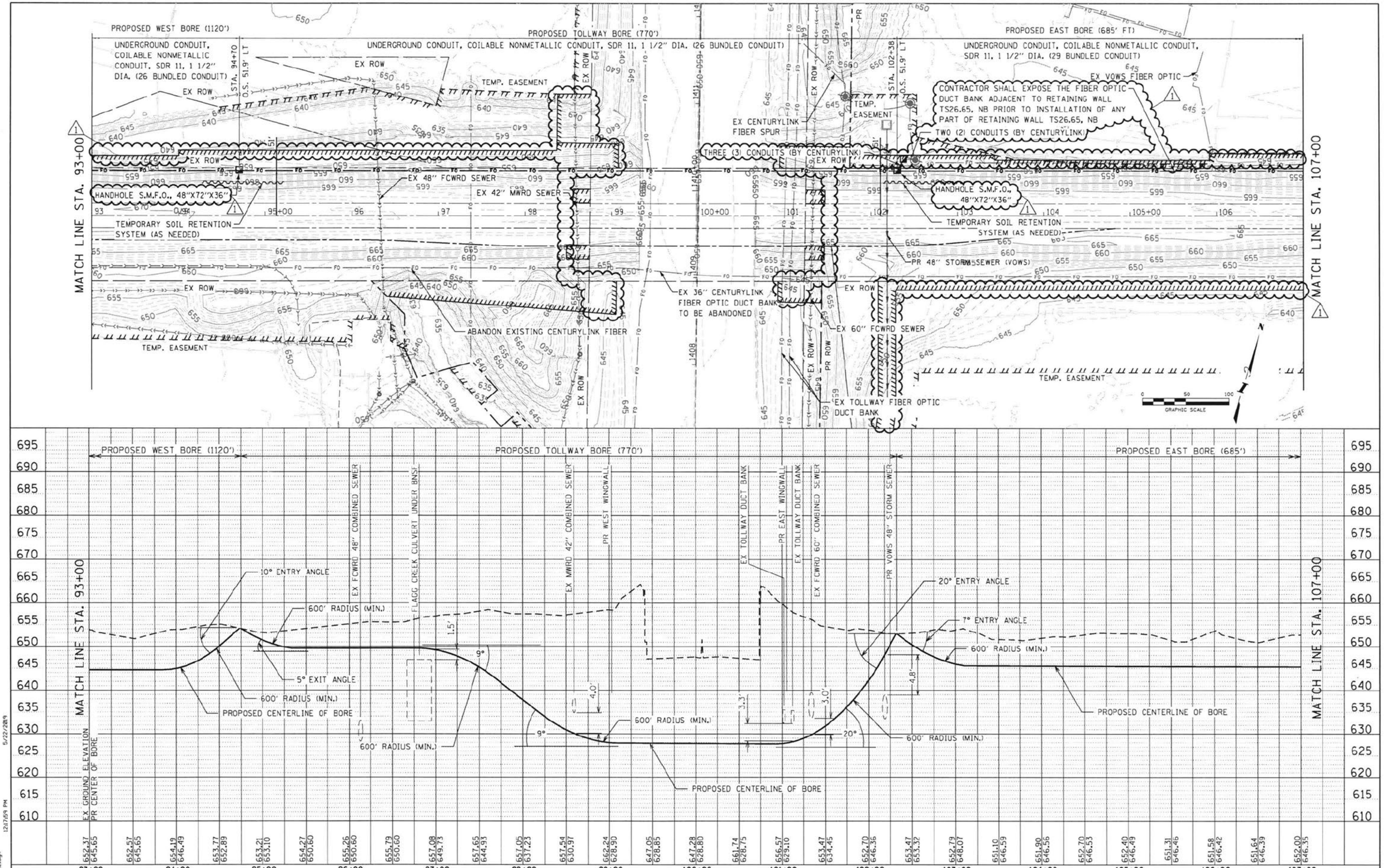


| | | | |
|---|---|---|---|
| DRAWN BY | JAS | SCALE | 1"=50' |
| CHECKED BY | JK | DATE | 5/9/2019 |

Gannett Fleming

THE ILLINOIS STATE TOLL HIGHWAY AUTHORITY
2700 OGDEN AVENUE
DOWNERS GROVE, ILLINOIS 60515

| REVISIONS | | |
|---|---|---|
| NO. | DATE | DESCRIPTION |
| 1 | 5/24/2019 | ADDENDUM NO. 1 |

CONTRACT NO. I-18-4428

PROPOSED CONDUIT PLAN OVER PROFILE
STA. 93+00 TO STA 107+00

SHEET NO. ITS-5
DRAWING NO. 239 OF 692

5/22/2019 12:17:59 PM
Default ...\4428-sht-its-112.dgn Installer

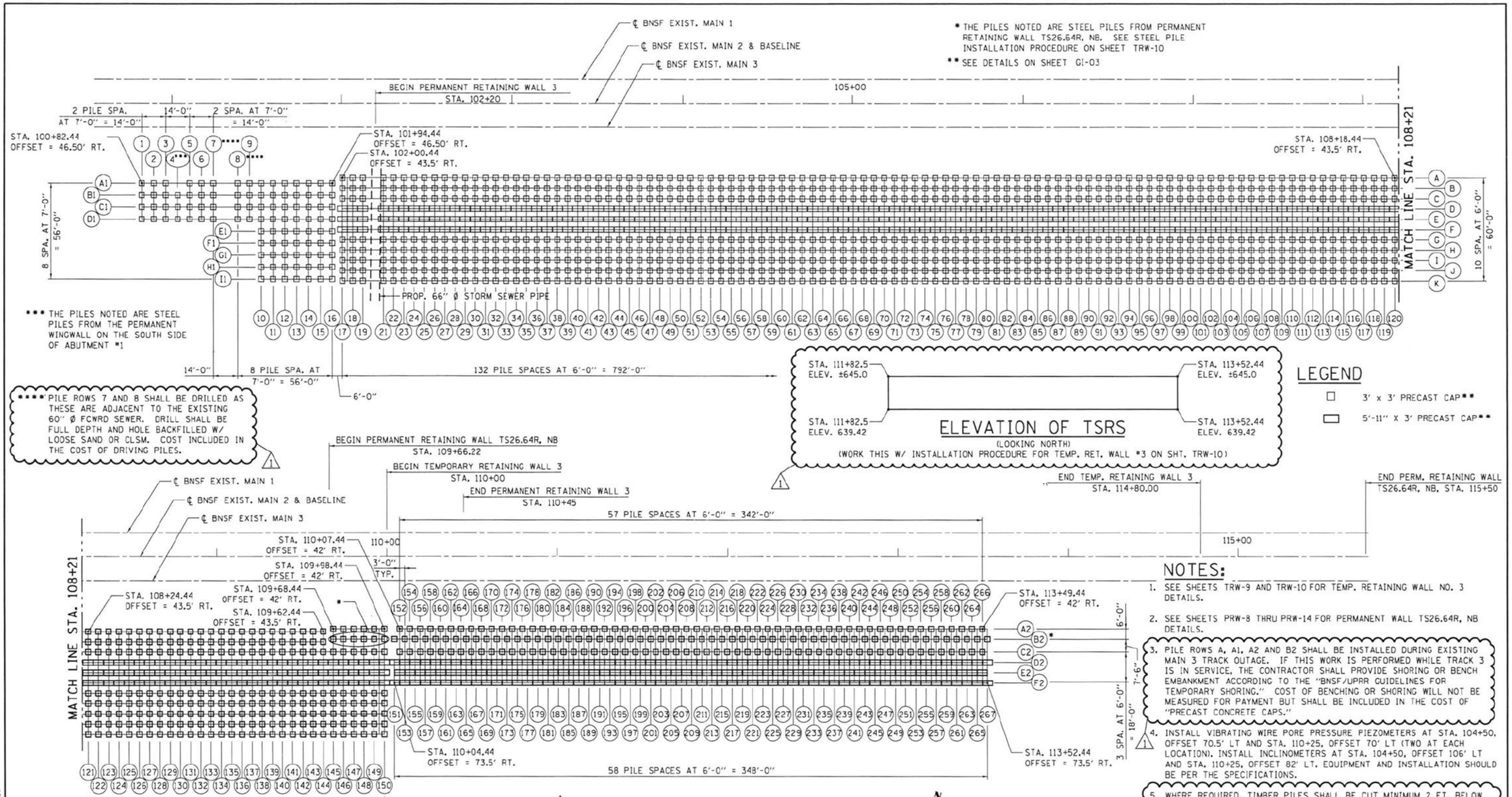


## TEST PILES

(SEE SHEET GI-04 FOR NOTES)

| NO. | LOCATION (COLUMN-ROW) | NO. | LOCATION (COLUMN-ROW) |
|---|---|---|---|
| 1 | 22 - E | 7 | 164 - D2 |
| 2 | 50 - F | 8 | 175 - E2 |
| 3 | 84 - E | 9 | 190 - C2 |
| 4 | 108 - E | 10 | 211 - F2 |
| 5 | 127 - F | 11 | 232 - E2 |
| 6 | 156 - F2 | 12 | 255 - F2 |

## TIMBER PILE AND CAP LAYOUT

## NOTES:

1. SEE SHEETS TRW-9 AND TRW-10 FOR TEMP. RETAINING WALL NO. 3 DETAILS.
2. SEE SHEETS PRW-8 THRU PRW-14 FOR PERMANENT WALL TS26.64R, NB DETAILS.
3. PILE ROWS A, A1, A2 AND B2 SHALL BE INSTALLED DURING EXISTING MAIN 3 TRACK OUTAGE. IF THIS WORK IS PERFORMED WHILE TRACK 3 IS IN SERVICE, THE CONTRACTOR SHALL PROVIDE SHORING OR BENCH EMBANKMENT ACCORDING TO THE "BNSF/UPRR GUIDELINES FOR TEMPORARY SHORING." COST OF BENCHING OR SHORING WILL NOT BE MEASURED FOR PAYMENT BUT SHALL BE INCLUDED IN THE COST OF "PRECAST CONCRETE CAPS."
4. INSTALL VIBRATING WIRE PORE PRESSURE PIEZOMETERS AT STA. 104+50, OFFSET 70.5' LT AND STA. 110+25, OFFSET 70' LT (TWO AT EACH LOCATION). INSTALL INCLINOMETERS AT STA. 104+50, OFFSET 106' LT AND STA. 110+25, OFFSET 82' LT. EQUIPMENT AND INSTALLATION SHOULD BE PER THE SPECIFICATIONS.
5. WHERE REQUIRED, TIMBER PILES SHALL BE CUT MINIMUM 2 FT. BELOW PROPOSED SUBGRADE FOR FINAL CONDITION. COST OF CUTTING PILES AND DISPOSAL OF PILE & CAP IS INCLUDED WITH THE COST OF DRIVING PILES.
6. SEE SPECIAL PROVISION "SETTLEMENT PLATFORMS" FOR LOCATIONS OF SETTLEMENT PLATFORMS REQUIRED.

KEY MAP

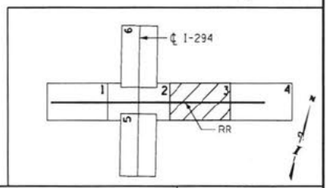


| | | | |
|---|---|---|---|
| DRAWN BY MTR | SCALE NTS | Gannett Fleming | THE ILLINOIS STATE TOLL HIGHWAY AUTHORITY<br>2700 OGDEN AVENUE<br>DOWNERS GROVE, ILLINOIS 60515 |
| CHECKED BY CB | DATE 5/9/2019 | | |

REVISIONS

| NO. | DATE | DESCRIPTION |
|---|---|---|
| 1 | 5/24/2019 | ADDENDUM NO. 1 |

CONTRACT NO. I-18-4428

CENTRAL TRI-STATE TOLLWAY
TIMBER PILE LAYOUT PLAN

SHEET NO. GI-02
DRAWING NO. 266 OF 692

5/22/2019
12:18:01 PM
Default
...\4428-sht-timberpile-002.dgn
Jeadlor

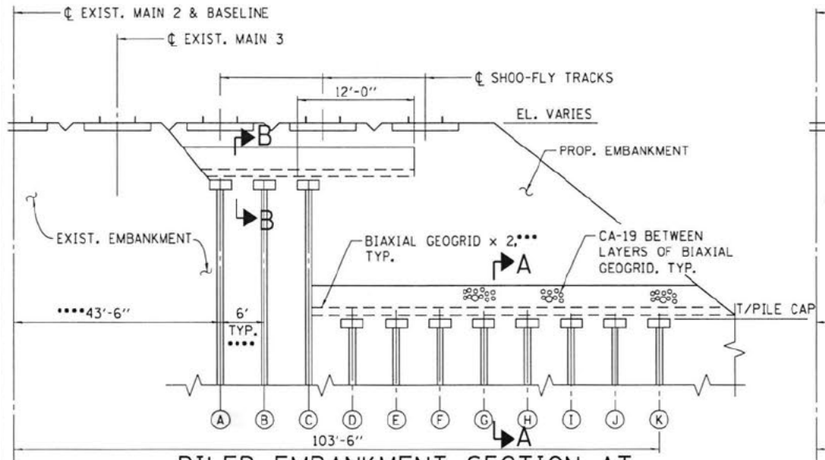


## PILED EMBANKMENT SECTION AT STATIONS 102+00.44 TO 109+98.44

(PERMANENT RETAINING WALL *3 NOT SHOWN)

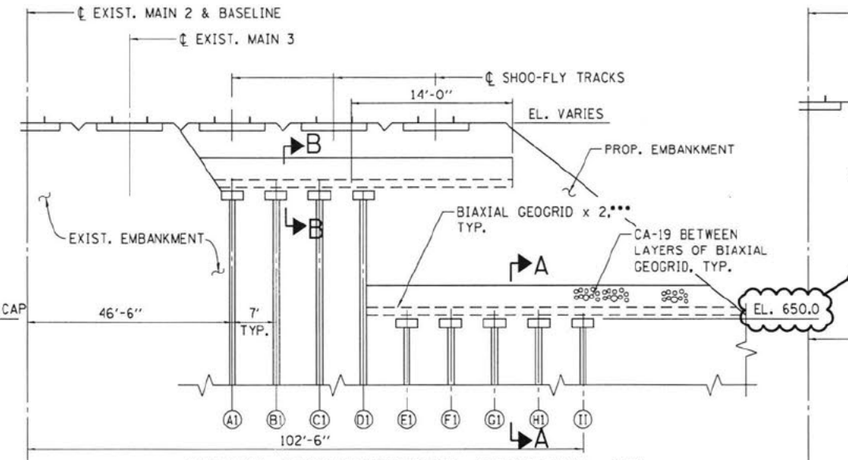


## PILED EMBANKMENT SECTION AT STATIONS 100+82.44 TO STA. 101+94.44

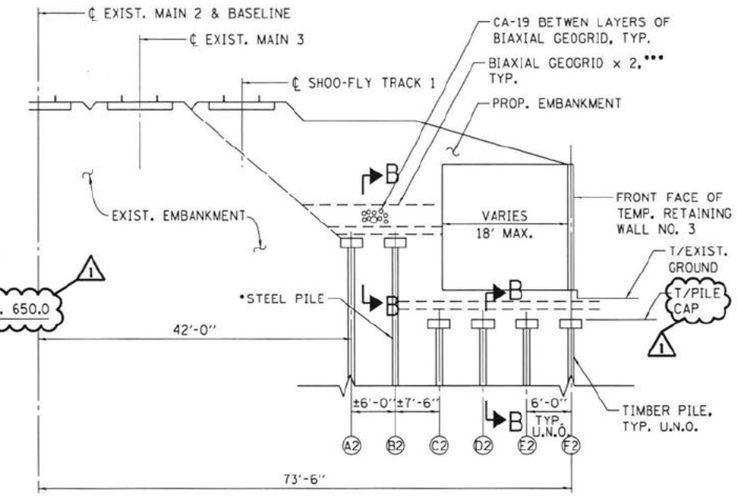


## TEMP. RETAINING WALL NO. 3 AND PILED EMBANKMENT SECTION AT STATIONS 110+04.44 TO 113+52.44

*STEEL PILES FROM PERMANENT RETAINING WALL TS26.64R, NB. SEE STEEL PILE INSTALLATION PROCEDURE ON SHEET TRW-10

1. BIAXIAL REINFORCEMENT SHALL CONFORM TO THE STRENGTH AND STIFFNESS REQUIREMENTS PROVIDED IN THE SPECIAL PROVISIONS IN BOTH THE MACHINE AND CROSS MACHINE DIRECTIONS.
2. A 24 TO 36-INCH THICK LOAD TRANSFER PLATFORM (LTP) WITH TWO LAYERS OF BIAXIAL GEOGRID SHALL BE CONSTRUCTED IMMEDIATELY ABOVE THE PILE CAPS. THE LTP AT THE BOTTOM OF THE EMBANKMENT (ROWS E1-I1) SHALL BE 36-INCHES THICK AND SHALL EXTEND TO THE EMBANKMENT TOE, SEE SECTION A-A. THE UPPER LTP (ROWS A1-D1) SHALL BE 24-INCHES THICK, SEE SECTION B-B.
3. ROWS E1 THROUGH I1 BEGIN AT STATION 101+52.44

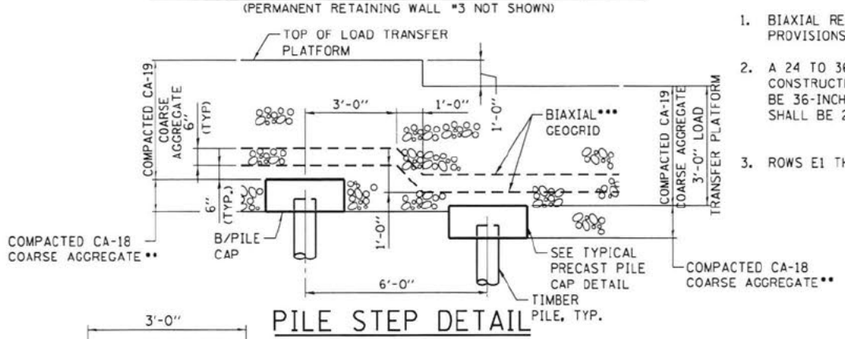


## PILE STEP DETAIL

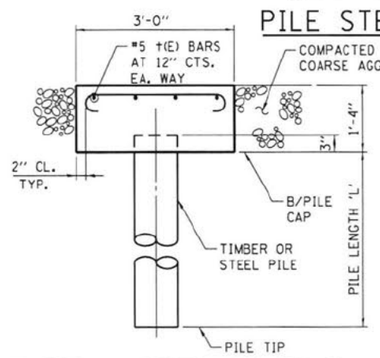


## TYPICAL PRECAST PILE CAP DETAIL

(FOR 3'-0"L x 3'-0"W x 1'-4"H SQUARE)
(APPLIES TO PILE ROWS A-C, G-K, A1-I1 AND A2-C2)

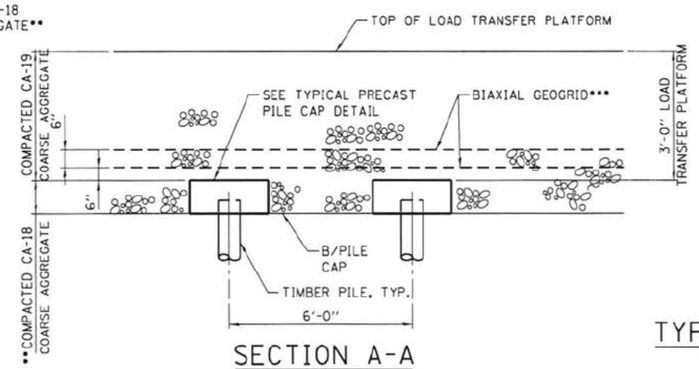


## SECTION A-A

** THE MATERIAL PLACED BETWEEN THE PILE CAPS SHALL BE CA-18 OR AN EQUIVALENT FRACTION PASSING THE NO. 200 SIEVE.

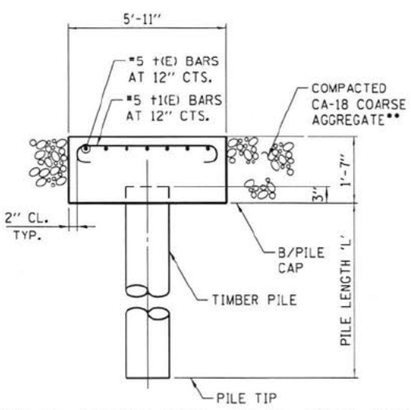


## TYPICAL PRECAST PILE CAP DETAIL

(FOR 5'-11"L x 3'-0"W x 1'-7"H RECTANGULAR))
(APPLIES TO PILE ROWS D-F AND D2-F2)

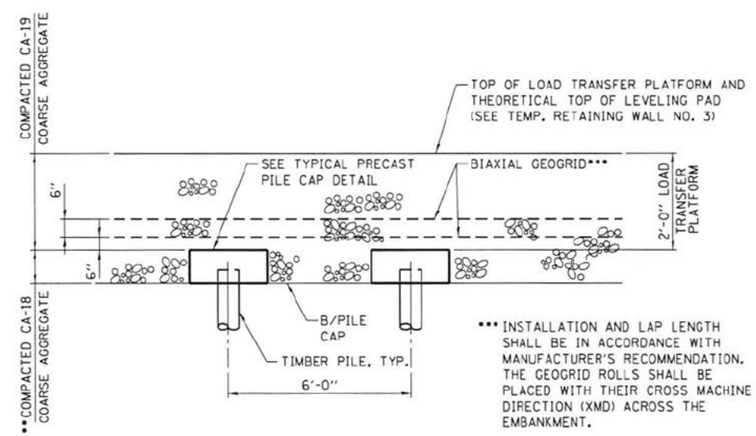


*** INSTALLATION AND LAP LENGTH SHALL BE IN ACCORDANCE WITH MANUFACTURER'S RECOMMENDATION. THE GEOGRID ROLLS SHALL BE PLACED WITH THEIR CROSS MACHINE DIRECTION (XMD) ACROSS THE EMBANKMENT.

## SECTION B-B

**** PILE SPACING VARIES AT STEEL PILE LOCATIONS. SEE SHEET GI-02 FOR ADDITIONAL INFORMATION.

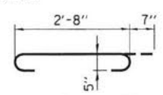


## BAR †(E)

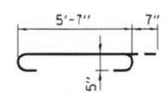


## BAR †1E)

## NOTES FOR STATIONS 102+00.44 TO 109+98.44

1. BIAXIAL REINFORCEMENT SHALL CONFORM TO THE STRENGTH AND STIFFNESS REQUIREMENTS PROVIDED IN THE SPECIAL PROVISIONS IN BOTH THE MACHINE AND CROSS MACHINE DIRECTIONS.
2. A 24 TO 36-INCH THICK LOAD TRANSFER PLATFORM (LTP) WITH TWO LAYERS OF BIAXIAL GEOGRID SHALL BE CONSTRUCTED IMMEDIATELY ABOVE THE PILE CAPS. THE LTP AT THE BOTTOM OF THE EMBANKMENT (ROWS D-K) SHALL BE 36-INCHES THICK AND SHALL EXTEND TO THE EMBANKMENT TOE, SEE SECTION A-A. THE UPPER LTP (ROWS A-C) SHALL BE 24-INCHES THICK, SEE SECTION B-B.

## NOTES FOR STATIONS 110+04.44 TO 113+52.44:

1. BIAXIAL REINFORCEMENT SHALL CONFORM TO THE STRENGTH AND STIFFNESS REQUIREMENTS PROVIDED IN THE SPECIAL PROVISIONS IN BOTH THE MACHINE AND CROSS MACHINE DIRECTIONS.
2. A 24-INCH LOAD TRANSFER PLATFORM (LTP) SHALL BE CONSTRUCTED IMMEDIATELY ABOVE THE PILE CAPS. THE LTP SHALL CONTAIN TWO LAYERS OF BIAXIAL GEOSYNTHETIC REINFORCEMENT. FOR PILES FROM STATIONS 110+04.44 TO 113+52.44, THE UPPER LTP SHALL EXTEND LATERALLY FROM THE EDGE OF THE INITIAL PILE ROW TO THE BACK OF THE WALL. THE LOWER LTP SHALL EXTEND FROM ROW B2 TO F2. 1
3. SEE TEMP. WALL NO. 3 PLANS (SHEET TRW-9 & TRW-10) FOR EXCAVATION LIMITS.

| | | | |
|---|---|---|---|
| DRAWN BY MTR | SCALE N.T.S. | Gannett Fleming | THE ILLINOIS STATE TOLL HIGHWAY AUTHORITY<br>2700 OGDEN AVENUE<br>DOWNERS GROVE, ILLINOIS 60515 |
| CHECKED BY CB | DATE 5/9/2019 | | |

REVISIONS

| NO. | DATE | DESCRIPTION |
|---|---|---|
| 1 | 5/24/2019 | ADDENDUM NO. 1 |

CONTRACT NO. I-18-4428

CENTRAL TRI-STATE TOLLWAY BN 261
SECTIONS, PILE CAP DETAILS & NOTES

SHEET NO. GI-03
DRAWING NO. 267 OF 692

Default
I:\4428-sht-timberpile-003.dgn
Leadfir
100.00000 1 / in.
5/22/2019
12:18:02 PM

## LOCATION (PILE ROW A TO K) PILED EMBANKMENT AT STATIONS 102+00.44 TO 109+98.44

| | ROW A | ROW B | ROW C | ROW D | ROWS E-F | ROWS G-K |
|---|---|---|---|---|---|---|
| * T/PILE CAP EL. | 658 | 658 | 658 | TABLE 1 | TABLE 1 | TABLE 1 |
| B/PILE CAP EL. | 656.67 | 656.67 | 656.67 | TABLE 1 | TABLE 1 | TABLE 1 |
| EST. PILE TIP EL. | 620 | 618 | 612 | 609 | 609 | 610 |
| ***** NO. PILES | 134 | 133 | 134 | 134 | 268 | 670 |
| EST. PILE TYPE | TIMBER | TIMBER | TIMBER | TIMBER | TIMBER | TIMBER |
| ** PILE LENGTH | 36'-11" | 38'-11" | 44'-11" | TABLE 1 | TABLE 1 | TABLE 1 |
| NOMINAL REQUIRED BEARING, RN (KIPS) | 109 | 109 | 109 | 216 | 216 | 152 |
| ⊙ PILE DIAM. | 12" AVG. | 12" AVG. | 12" AVG. | 15" | 15" | 12" AVG. |

## LOCATION (PILE ROW A2 TO F2) TEMP. RETAINING WALL 3 AND PILED EMBANKMENT AT STATIONS 110+04.44 TO 112+02.44

| | ROW A2 | ROW B2 | ROW C2 | ROWS D2-F2 |
|---|---|---|---|---|
| * T/PILE CAP EL. | 654 | NOTE 6 | TABLE 1 | TABLE 1 |
| B/PILE CAP EL. | 652.67 | NOTE 6 | TABLE 1 | TABLE 1 |
| EST. PILE TIP EL. | 611 | NOTE 6 | 605 | 601 |
| NO. PILES | 33 | 40 | 33 | 101 |
| PILE TYPE | TIMBER | STEEL | TIMBER | TIMBER |
| ** EST. PILE LENGTH | 41'-11" | NOTE 6 | TABLE 1 | TABLE 1 |
| NOMINAL REQUIRED BEARING, RN (KIPS) | 86 | 108 | 146 | 232 |
| *** PILE DIAM. | 12" | - | 15" | 15" |

## LOCATION (PILE ROW A2 TO F2) TEMP. RETAINING WALL 3 AND PILED EMBANKMENT AT STATIONS 112+05.44 TO 113+52.44

| | ROW A2 | ROW B2 | ROW C2 | ROWS D2-F2 |
|---|---|---|---|---|
| * T/PILE CAP EL. | 654 | NOTE 6 | 641 | 641 |
| B/PILE CAP EL. | 652.67 | NOTE 6 | 639.67 | 639.42 |
| EST. PILE TIP EL. | 617 | NOTE 6 | 605 | 600 |
| NO. PILES | 25 | 26 | 25 | 75 |
| PILE TYPE | TIMBER | STEEL | TIMBER | TIMBER |
| ** EST. PILE LENGTH | 35'-11" | NOTE 6 | 34'-11" | 39'-8" |
| NOMINAL REQUIRED BEARING, RN (KIPS) | 86 | 108 | 146 | 208 |
| **** PILE DIAM. | 12" | - | 14" | 14" |

⊙ THE PILES IN ROWS D, E, AND F SHALL BE 15 INCH IN DIAMETER AT THE TOP AND TAPER TO 11 INCH DIAMETER AT THE PILE TIP.

⊙⊙ THE PILES IN ROWS D1 THROUGH I1 SHALL BE 14 INCH IN DIAMETER AT THE TOP AND TAPER TO 11 INCH DIAMETER AT THE PILE TIP.

## LOCATION (PILE ROW A1 TO I1) PILED EMBANKMENT AT STATIONS 100+82.44 TO 101+94.44

| | ROW A1 | ROW B1 | ROW C1 | ROW D1 | ROWS E1-I1 |
|---|---|---|---|---|---|
| T/PILE CAP EL. | 657 | 657 | 657 | 657 | 650 |
| B/PILE CAP EL. | 655.67 | 655.67 | 655.67 | 655.67 | 648.67 |
| EST. PILE TIP EL. | 620 | 618 | 612 | 610 | 610 |
| ****** NO. PILES | 15 | 16 | 16 | 16 | 35 |
| EST. PILE TYPE | TIMBER | TIMBER | TIMBER | TIMBER | TIMBER |
| ** PILE LENGTH | 35'-11" | 37'-11" | 43'-11" | 45'-11" | 38'-11" |
| NOMINAL REQUIRED BEARING, RN (KIPS) | 78 | 109 | 142 | 172 | 189 |
| ⊙⊙ PILE DIAM. | 12" AVG. | 12" AVG. | 12" AVG. | 14" | 14" |

## TABLE 1

| STATION | ROWS | T/PILE CAP | B/PILE CAP | LENGTH |
|---|---|---|---|---|
| 102+00.44 TO 102+80.00 | D-F | 643.5 | 641.92 | 33'-2" |
| | G-K | 643.5 | 642.17 | 33'-5" |
| 102+80.00 TO 103+40.00 | D-F | 642.5 | 640.92 | 32'-2" |
| | G-K | 642.5 | 641.17 | 32'-5" |
| 103+40.00 TO 104+00.00 | D-F | 641.5 | 639.92 | 31'-2" |
| | G-K | 641.5 | 640.17 | 31'-5" |
| 104+00.00 TO 105+50.00 | D-F | 640.5 | 638.92 | 30'-2" |
| | G-K | 640.5 | 639.17 | 30'-5" |
| 105+50.00 TO 107+00.00 | D-F | 639.5 | 637.92 | 29'-2" |
| | G-K | 639.5 | 638.17 | 29'-5" |
| 107+00.00 TO 108+50.00 | D-F | 638.5 | 636.92 | 28'-2" |
| | G-K | 638.5 | 637.17 | 28'-5" |
| 108+50.00 TO 109+98.44 | D-F | 637.5 | 635.92 | 27'-2" |
| | G-K | 637.5 | 636.17 | 27'-5" |
| 110+04.44 TO 110+45.00 | C2 | 637.5 | 636.17 | 31'-5" |
| | D2-F2 | 637.5 | 635.92 | 35'-2" |
| 110+51.00 TO 112+02.44 | C2 | 641 | 639.67 | 34'-11" |
| | D2-F2 | 641 | 639.42 | 38'-8" |

* TOP OF PILE CAP ELEVATIONS FOR PILES LOCATED BELOW TEMP. RETAINING WALL NO. 3 SHALL BE SET SUCH THAT A 24" LOAD TRANSFER PLATE CAN BE INSTALLED BETWEEN THE BOTTOM OF TEMP. RETAINING WALL 3 AND TOP OF PILE CAP. SEE SECTION B-B ON SHEET NO. GI-03 FOR REQUIRED FINAL CONFIGURATION.

** INCLUDES 3" PILE EMBEDMENT INTO CAP.

*** THE TIMBER PILES BENEATH TEMP. RETAINING WALL NO. 3 SHALL BE 15 INCH IN DIAMETER AT THE TOP AND TAPER TO 11 INCH DIAMETER AT THE PILE TIP. THE TIMBER PILES IN ROW A2 SHALL BE 12 INCH IN DIAMETER AT THE TOP AND TAPER TO 8 INCH AT THE TIP.

**** THE TIMBER PILES BENEATH TEMP. RETAINING WALL NO. 3 SHALL BE 14 INCH IN DIAMETER AT THE TOP AND TAPER TO 11 INCH DIAMETER AT THE PILE TIP. THE TIMBER PILES IN ROW A2 SHALL BE 12 INCH IN DIAMETER AT THE TOP AND TAPER TO 8 INCH AT THE TIP.

***** THE FINAL FIVE PILES IN ROW B BETWEEN STATIONS 102+00.44 AND 109+98.44 ARE STEEL PILES FROM WALL TS26.64. SEE NOTE 6.

****** THE STEEL PILE AT LOCATION A1/4 SHALL NOT HAVE A PILE CAP. THE PILES AT LOCATIONS B1/4, C1/4, AND D1/4 ARE STEEL PILES WITH CAPS. SEE SHEET NO. SA-23 FOR EXACT STEEL PILE LOCATIONS AND TOP OF STEEL.

## NOTES:

1. THE CONTRACTOR SHALL PUT IN PLACE THE FOLLOWING MONITORING PROGRAM:

   A. SETTLEMENT PLATES SHOULD BE INSTALLED TO MONITOR SETTLEMENT OF THE SUBGRADE AND SETTLEMENT OF THE SURFACE EMBANKMENT AS PER ARTICLE 204.06 OF THE STANDARD SPECIFICATIONS. AT LEAST FOUR SECTIONS ALONG THE EMBANKMENT WILL BE MONITORED WITH THREE SETTLEMENT PLATES AT EACH SECTION. TWO SECTIONS SHALL BE LOCATED AS SHOWN ON PLANS OR AT LOCATIONS DETERMINED BY THE ENGINEER. THE COST FOR THE SETTLEMENT PLATES SHALL BE INCLUDED IN COARSE AGGREGATE.

   B. PRIOR TO THE INSTALLATION OF TIMBER PILES, TEST PILES SHALL BE DRIVEN AT LOCATIONS SHOWN ON THE PLANS TO THE ELEVATION INDICATED ON THE PLANS AND IN THE STANDARD SPECIFICATIONS. PRIOR TO DRIVING THE TEST PILES, THE EXISTING GRADES SHALL BE EXCAVATED TO THE PILE CAP BASE LINE INDICATED ON THE PLANS OR AS DIRECTED BY THE ENGINEER. THE TEST PILES SHALL BE INSTALLED IN PERMANENT LOCATION AND THEY SHALL BE MONITORED WITH A PILE DRIVING ANALYZER (PDA) DURING DRIVING AND AGAIN TWO WEEKS AFTER DRIVING TO RECORD THE PILE BEARING CAPACITY INCREASE DUE TO SOIL SET-UP. PDA TEST SHALL BE PERFORMED ACCORDING TO ASTM D4956. THE CONTRACTOR SHALL PROVIDE DRIVING CRITERIA BASED ON THE ANALYZED RESULTS OF THE PDA TEST. A CORRELATION SHALL BE ESTABLISHED BETWEEN THE BLOW-COUNT, WHILE DRIVING THE TEST PILES, AND THE INCREASED PILE BEARING CAPACITY AFTER THE TWO WEEKS SOIL SET-UP. THE RESULT OF THIS CORRELATION SHALL BE USED AS A GUIDE WHEN DRIVING THE REMAINING PILES. THE MAINTENANCE OF TRAFFIC DURING THE TEST PILE DRIVING OPERATIONS, IF REQUIRED, SHALL BE INCLUDED IN MAINTENANCE OF TRAFFIC. THE COST FOR INITIAL TEST AT THE TIME OF DRIVING AND ADDITIONAL TEST AT THE TWO WEEK PERIOD, INCLUDING ALL EQUIPMENT AND LABOR NEEDED, WILL NOT BE MEASURED FOR PAYMENT BUT SHALL BE INCLUDED IN THE COST OF TEST PILE TIMBER.

2. TIMBER PILE SPLICING IS NOT PERMITTED.

3. IF ANY PRODUCTION PILE DOES NOT ACHIEVE THE ANTICIPATED DESIGN CAPACITY, THE ENGINEER SHALL BE NOTIFIED FOR FURTHER EVALUATION

4. CONTRACTOR MAY SUBSTITUTE CAST-IN-PLACE PILE CAPS AT NO ADDITIONAL COST TO THE TOLLWAY AND AS APPROVED BY THE ENGINEER.

5. SEE SHEET TRW-10 FOR LIMITS AND QUANTITY OF STRUCTURE EXCAVATION FOR INSTALLATION OF TEMP. RETAINING WALL 3 AND GROUND IMPROVEMENT.

6. SEE SHEETS PRW-8 THROUGH PRW-14 FOR STEEL PILE DETAILS.

7. TOP OF PILE CAP ELEVATION SHALL BE COORDINATED WITH THE INSTALLATION OF WALL TS26.63R LEVELING PAD (SEE SHEET PRW-19.1). ADJUST TOP OF PILE CAPS IF REQUIRED AS DIRECTED BY THE ENGINEER.

## BILL OF MATERIAL
## 3'-0" x 3'-0" PRECAST CONCRETE CAPS

(NO. OF CAPS = 1,351)
(INCLUDED FOR INFORMATION ONLY. COST INCLUDED IN PRECAST CONCRETE CAPS)

| DESCRIPTION | UNIT | QUANTITY |
|---|---|---|
| CONCRETE STRUCTURES | CU YD | 599 |
| REINFORCEMENT BARS, EPOXY COATED | POUND | 43,213 |

## BILL OF MATERIAL
## 5'-11" x 3'-0" PRECAST CONCRETE CAPS

(NO. OF CAPS = 578)
(INCLUDED FOR INFORMATION ONLY. COST INCLUDED IN PRECAST CONCRETE CAPS)

| DESCRIPTION | UNIT | QUANTITY |
|---|---|---|
| CONCRETE STRUCTURES | CU YD | 601 |
| REINFORCEMENT BARS, EPOXY COATED | POUND | 38,131 |

## TOTAL BILL OF MATERIAL

| PAY ITEM NO. | ITEM DESCRIPTION | UNIT | SUPER | SUB | TOTAL |
|---|---|---|---|---|---|
| 50401205 | PRECAST CONCRETE CAPS | EACH | - | 1,929 | 1,929 |
| 51200205 | FURNISHING UNTREATED PILES 30.1 TO 45 FEET | FOOT | - | 65,238 | 65,238 |
| 51200305 | FURNISHING UNTREATED PILES OVER 45 FEET | FOOT | - | 689 | 689 |
| 51202305 | DRIVING PILES | FOOT | - | 65,927 | 65,927 |
| 51202900 | TEST PILE TIMBER | EACH | - | 12 | 12 |
| 52200020 | TEMPORARY SOIL RETENTION SYSTEM | SQ FT | - | 950 | 950 |
| X0325110 | BIAXIAL GEOGRID | SQ YD | - | 18,724 | 18,724 |
| X0327267 | SLOPE INCLINOMETER | EACH | - | 2 | 2 |
| X0795800 | COARSE AGGREGATE | TON | - | 12,837 | 12,837 |
| Z0040000 | PIEZOMETERS | EACH | - | 4 | 4 |
| Z0065100 | SETTLEMENT PLATFORMS | EACH | | 7 | 7 |

| | | | |
|---|---|---|---|
| DRAWN BY MTR | SCALE NA | Gannett Fleming | THE ILLINOIS STATE TOLL HIGHWAY AUTHORITY, 2700 OGDEN AVENUE, DOWNERS GROVE, ILLINOIS 60515 |
| CHECKED BY CB | DATE 5/9/2019 | | |

REVISIONS

| NO. | DATE | DESCRIPTION |
|---|---|---|
| 1 | 5/24/2019 | ADDENDUM NO. 1 |

CONTRACT NO. I-18-4428

CENTRAL TRI-STATE TOLLWAY
PILE MATERIAL, NOTES & SCHEDULES

SHEET NO. GI-04
DRAWING NO. 268 OF 692

5/22/2019
12:18:03 PM
Default: ...\4428-ant-timberpile-004.dgn
[mueller]

| | DIM A | DIM B | DIM C | DIM D |
|---|---|---|---|---|
| BEAM LINE 1 | 4'-11 5/16" | 5'-6 7/16" | 4'-11 11/16" | 5'-6 9/16" |
| BEAM LINE 12 | 5'-6 3/16" | 4'-11 11/16" | 5'-6 9/16" | 4'-11 7/16" |
| BEAM LINE 13 | 5'-4 5/16" | 5'-1 11/16" | 5'-4 11/16" | 5'-1 5/16" |
| BEAM LINE 16 | 5'-6 7/16" | 4'-11 11/16" | 5'-6 9/16" | 4'-11 7/16" |

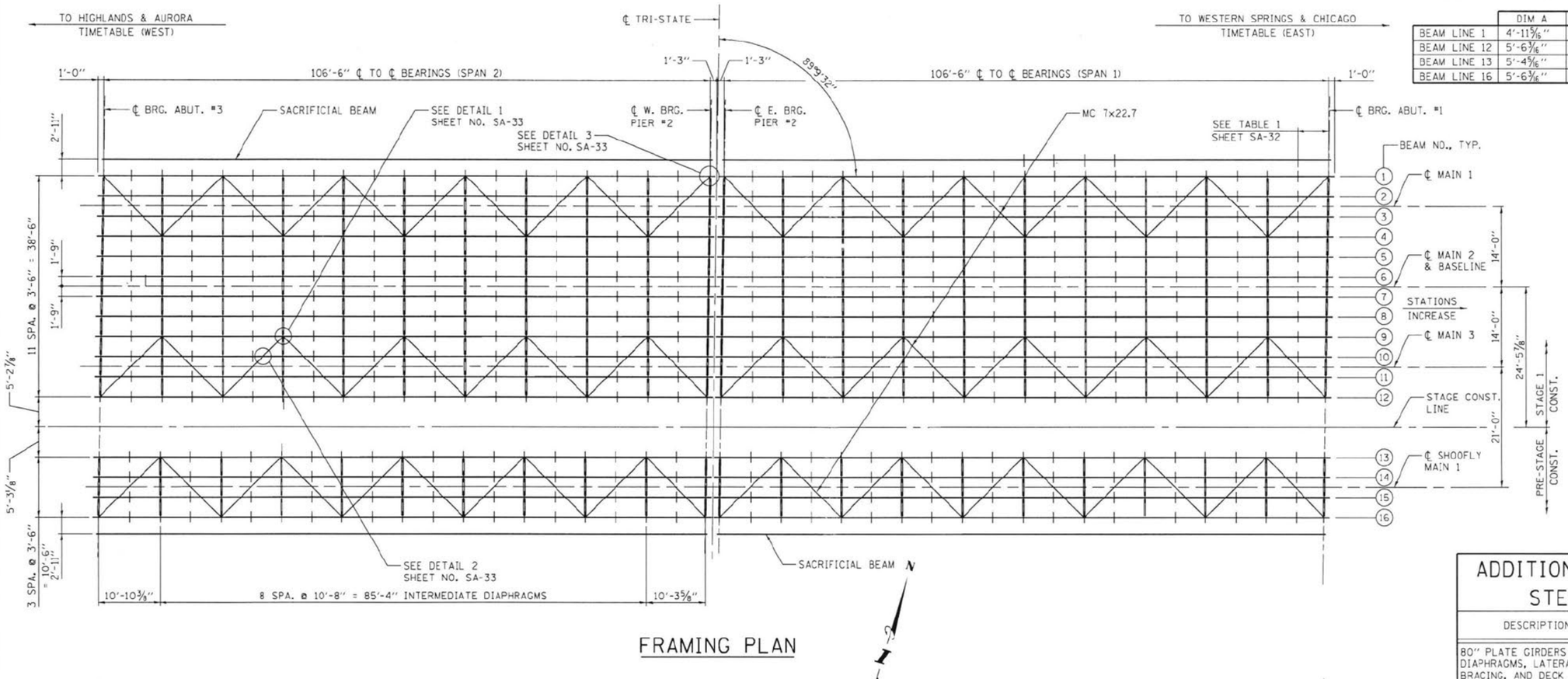


FRAMING PLAN

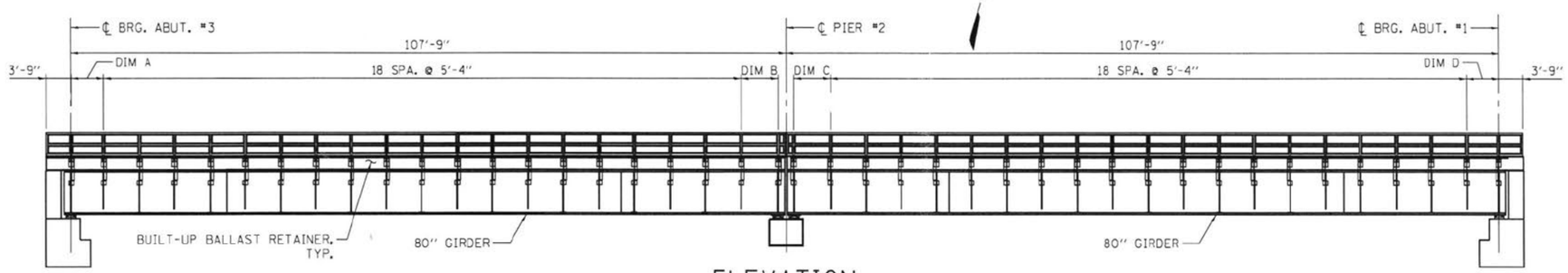


ELEVATION

## ADDITIONAL STRUCTURAL STEEL DETAILS

| DESCRIPTION | UNIT | QUANTITY | LENGTH |
|---|---|---|---|
| 80" PLATE GIRDERS W/ DIAPHRAGMS, LATERAL BRACING, AND DECK PLATES | EACH | 32 | 108'-6" |
| BALLAST CURB SECTIONS, SUPPORT BRACKETS, FILL PLATES, ETC. | LOT | 1 | |
| WALKWAY BRACKETS | EACH | 168 | |
| SACRIFICIAL BEAM, BEARINGS, ETC. | EACH | 4 | 108'-6" |

ITEMS SHOWN IN TABLE ARE FOR INFORMATION ONLY AND ARE INCLUDED IN COST OF FURNISHING AND ERECTING STRUCTURAL STEEL.

## STEEL NOTES:

**GENERAL:**
FABRICATION AND WORKMANSHIP SHALL CONFORM TO CURRENT AREMA SPECIFICATIONS FOR STEEL RAILWAY BRIDGES, AND SECTION D4600 OF THE BNSF STANDARD CONSTRUCTION SPECIFICATIONS.

DEAD LOAD: (ASSUMED)

| | |
|---|---|
| RAIL | 200 LBS. PER LIN. FT. |
| BALLAST (INCL. TIE) | 3775 FOR 30" BALLAST |
| STEEL DECK & CURB | 440 LBS. PER LIN. FT. |
| WALKWAYS | 65 LBS. PER LIN. FT. |
| FUTURE BALLAST | N/A |
| STEEL | 1500 (AVG.) LBS. PER LIN. FT. |
| TOTAL | 5980 LBS. PER LIN. FT. OF TRACK |

**DESIGN LOADING:**
COOPER E80 WITH DIESEL IMPACT FOR BALLAST DECK.

MATERIAL:
ALL STRUCTURAL STEEL SHALL CONFORM TO ASTM DESIGNATION. SPECIFICATION: A709, GRADE 50 OR 50W, EXCEPT AS NOTED. ALL A709 GR. STEEL FOR PRIMARY MEMBERS SHALL MEET IMPACT REQUIREMENTS FOR HIGH STRENGTH STRUCTURAL STEEL PER CHAPTER 15 OF THE AREMA MANUAL. BALLAST PAN, STIFFENERS, DIAPHRAGMS AND OTHER SECONDARY MEMBERS SHALL BE EXEMPT FROM IMPACT TEST REQUIREMENTS. GALVANIZE STEEL AS NOTED ON PLANS.

**SHOP NOTES:**
BEARING PLATES ARE TO BE FLAT AND LEVEL AFTER WELDING.

1

**OPEN HOLES:**
SHALL BE 15/16" DIA. UNLESS OTHERWISE NOTED.

ALL FASTENERS SHALL BE 7/8" DIA. H.S. BOLTS (ASTM A325) BOLTS SHALL BE HEAVY HEX. STRUCTURAL TYPE WITH ASTM A563, GR. C3 HEAVY HEX NUT AND ASTM F436 HARDENED STEEL WASHER UNDER THE TURNED ELEMENT. HIGH STRENGTH BOLTS SHALL BE TIGHTENED BY THE "TURN-OF-NUT" METHOD TO OBTAIN PROPER BOLT TENSION ACCORDING TO THE SPECIFICATION FOR STRUCTURAL JOINTS USING HIGH STRENGTH BOLTS FOR SLIP CRITICAL CONNECTIONS.

WELDING SHALL CONFORM TO CURRENT A.W.S. STRUCTURAL WELDING CODE D1.5. ALL WELDED METAL MUST BE EQUIVALENT TO THE BASE METAL IN STRENGTH, CORROSION RESISTANCE, AND WEATHERED APPEARANCE.

ALL EXPOSED SURFACES OF STRUCTURAL STEEL SHALL BE CLEANED PER STEEL STRUCTURES PAINTING COUNCIL SPECIFICATIONS SSPC-SP6. THE TOP SURFACE OF THE BEAMS SHALL BE ADJUSTED TO FORM A STRAIGHT LINE AT ANY TRANSVERSE SECTION THROUGHOUT THE SPAN. TOLERANCE IS PLUS OR MINUS 1/8".

SPANS SHALL BE FULLY SHOP ASSEMBLED TO ENSURE ACCURATE FIT.

THE THICKNESS OF BEARING PLATES SHALL BE ADJUSTED TO MAINTAIN DEPTHS SHOWN (TOTAL PLUS OR MINUS 1/16") FOR EACH BEAM AT THE CENTER LINE OF BEARINGS.

1

| | | | | | |
|---|---|---|---|---|---|
| DRAWN BY EBP | SCALE N.T.S. | Gannett Fleming | THE ILLINOIS STATE TOLL HIGHWAY AUTHORITY<br>2700 OGDEN AVENUE<br>DOWNERS GROVE, ILLINOIS 60515 | REVISIONS<br>NO. / DATE / DESCRIPTION<br>1 / 5/24/2019 / ADDENDUM NO. 1 | CONTRACT NO. I-18-4428<br>CENTRAL TRI-STATE TOLLWAY BN 261<br>FRAMING PLAN |
| CHECKED BY JGC | DATE 5/9/2019 | | | | SHEET NO. SA-29<br>DRAWING NO. 297 OF 692 |

Default
-\4428-sht-261-829-framing.dgn
Inualter
20.000000 / in.
5/22/2019
12:18:05 PM

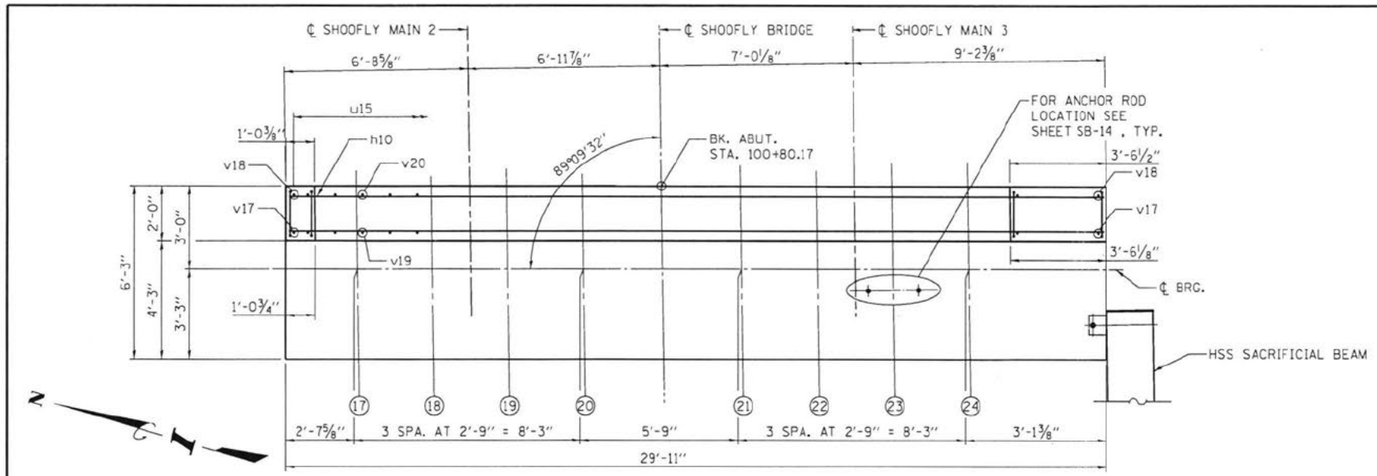


TOP PLAN

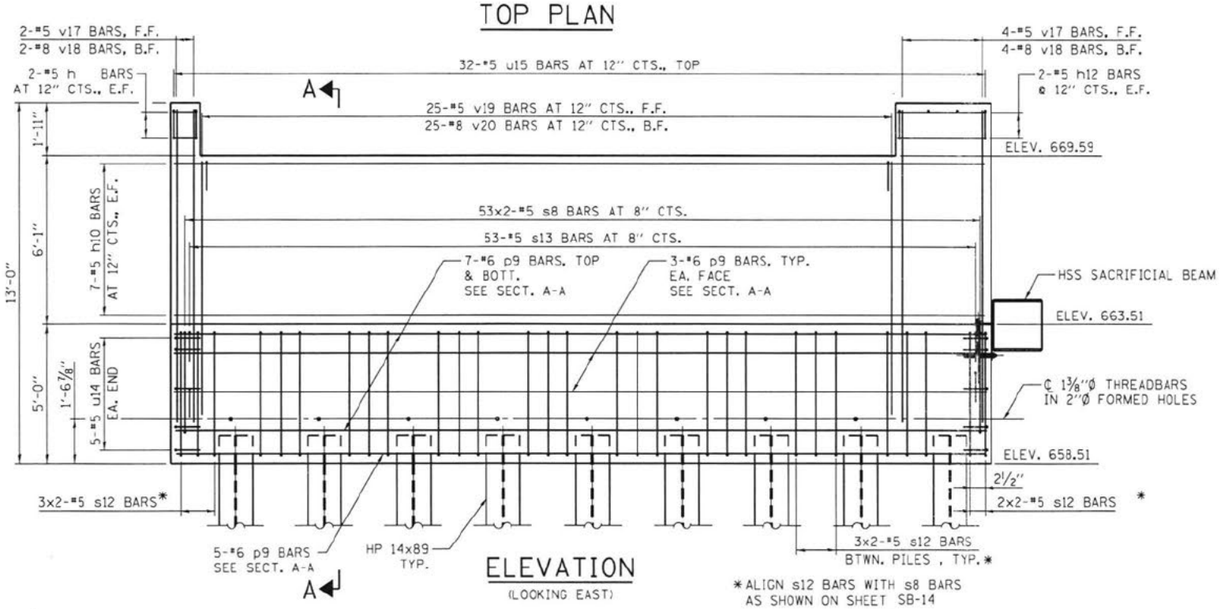


ELEVATION

(LOOKING EAST)

*ALIGN s12 BARS WITH s8 BARS AS SHOWN ON SHEET SB-14

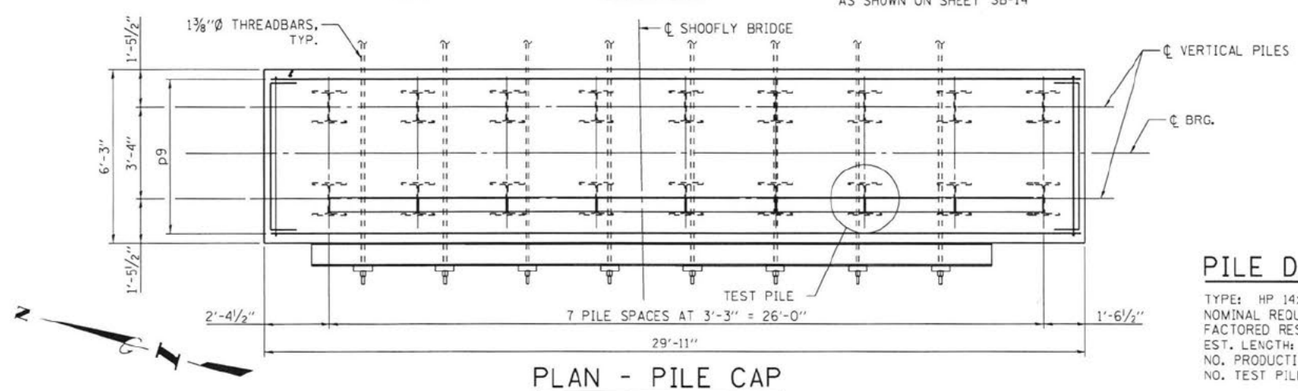


PLAN - PILE CAP

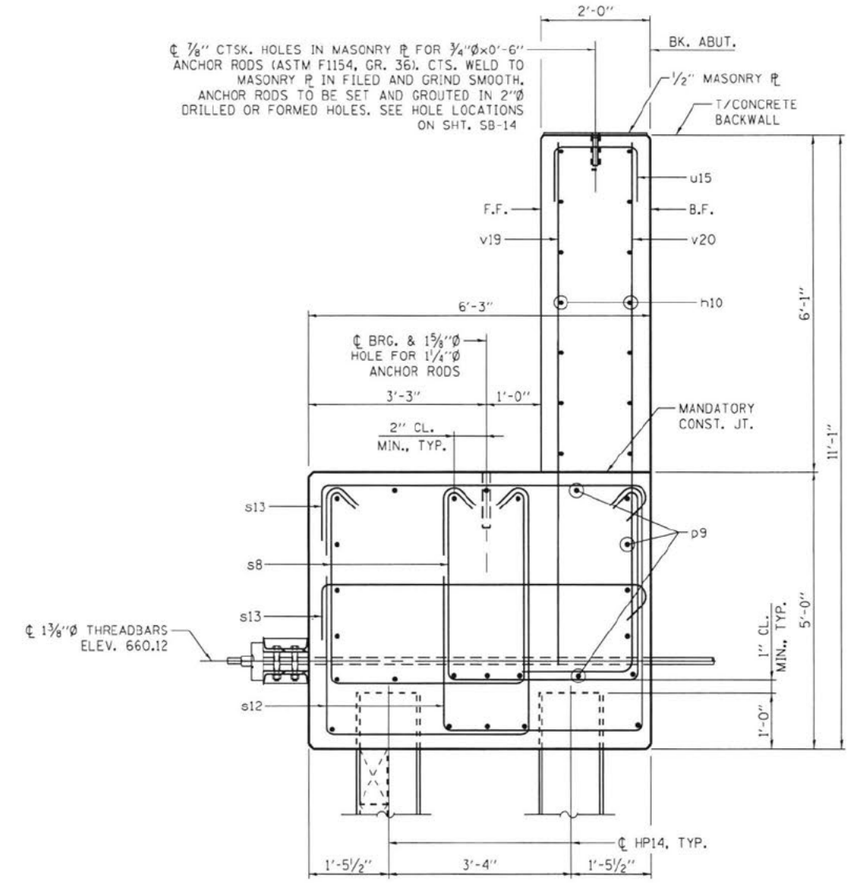


SECTION A-A

## NOTES:

1. SEE SHEETSB-8 FOR ABUTMENT DETAILS AND SHEET SB-9 FOR BILL OF MATERIALS AND BAR BENDING DIAGRAM.
2. SEE SHEET SB-14 FOR ANCHOR ROD LAYOUT.
3. DURING REMOVAL OF SHOO-FLY, PILES SHALL BE CUT-OFF AT ELEVATION 645.00
4. BRIDGE SEAT SHALL BE SLOPED ¼" BETWEEN BEARINGS TO PROVIDE DRAINAGE.
5. ALL PILES SHALL BE VIBRATED INTO PLACE. (1)

## PILE DATA

TYPE: HP 14x89
NOMINAL REQUIRED BEARING: 158 KIP
FACTORED RESISTANCE AVAILABLE: 179 KIP
EST. LENGTH: 74
NO. PRODUCTION PILES: 17
NO. TEST PILES: 1

| | | | |
|---|---|---|---|
| DRAWN BY EBP | SCALE N.T.S. | Gannett Fleming | THE ILLINOIS STATE TOLL HIGHWAY AUTHORITY<br>2700 OGDEN AVENUE<br>DOWNERS GROVE, ILLINOIS 60515 |
| CHECKED BY JGC | DATE 5/9/2019 | | |

| REVISIONS | | |
|---|---|---|
| NO. | DATE | DESCRIPTION |
| 1 | 5/24/2019 | ADDENDUM NO. 1 |

CONTRACT NO. I-18-4428

CENTRAL TRI-STATE TOLLWAY TEMP. SHOOFLY ABUTMENT T1 PLAN AND ELEVATION

SHEET NO. SB-7

DRAWING NO. 323 OF 692

DgnFile(s): 1-18-4428-sht-2611-0027-abut1.dgn
Level(s): 5,3333 / vs.
5/22/2019 12:18:07 PM

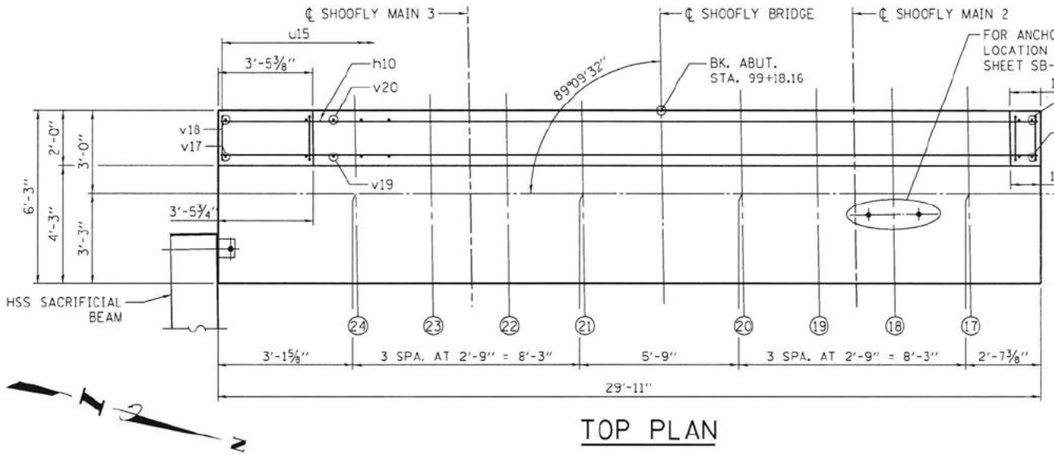


## TOP PLAN

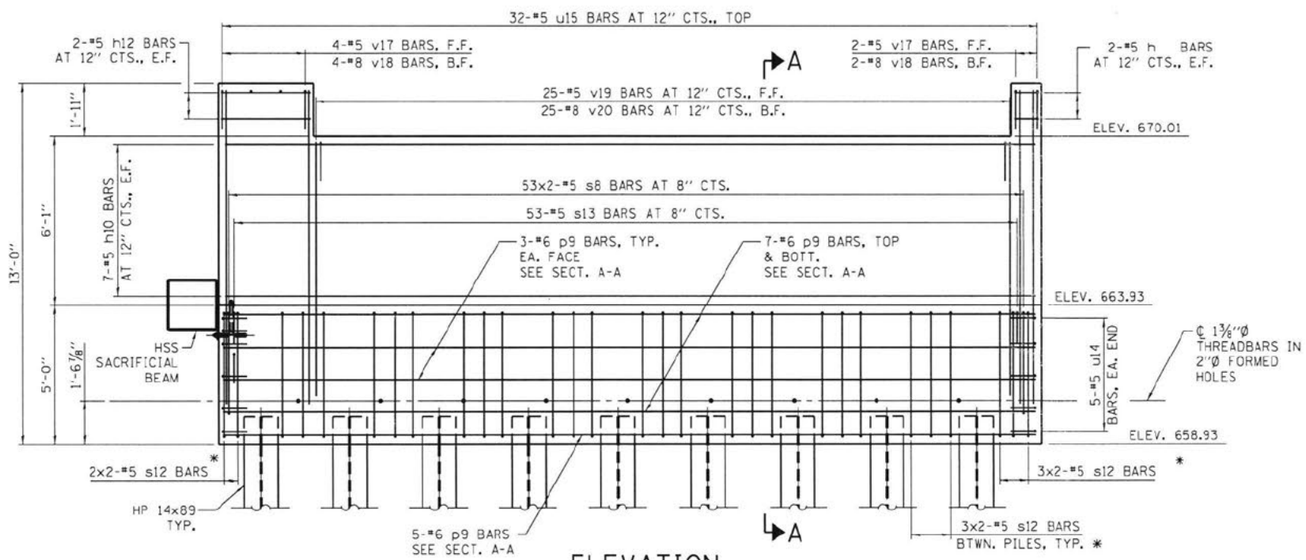


## ELEVATION

(LOOKING WEST)

* ALIGN s12 BARS WITH s8 BARS AS SHOWN ON SHEET SB-14

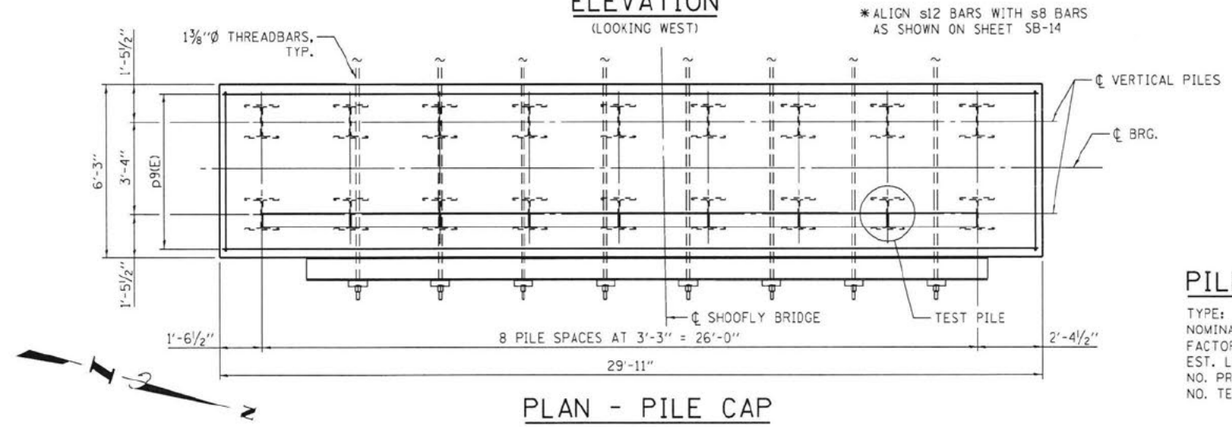


## PLAN - PILE CAP

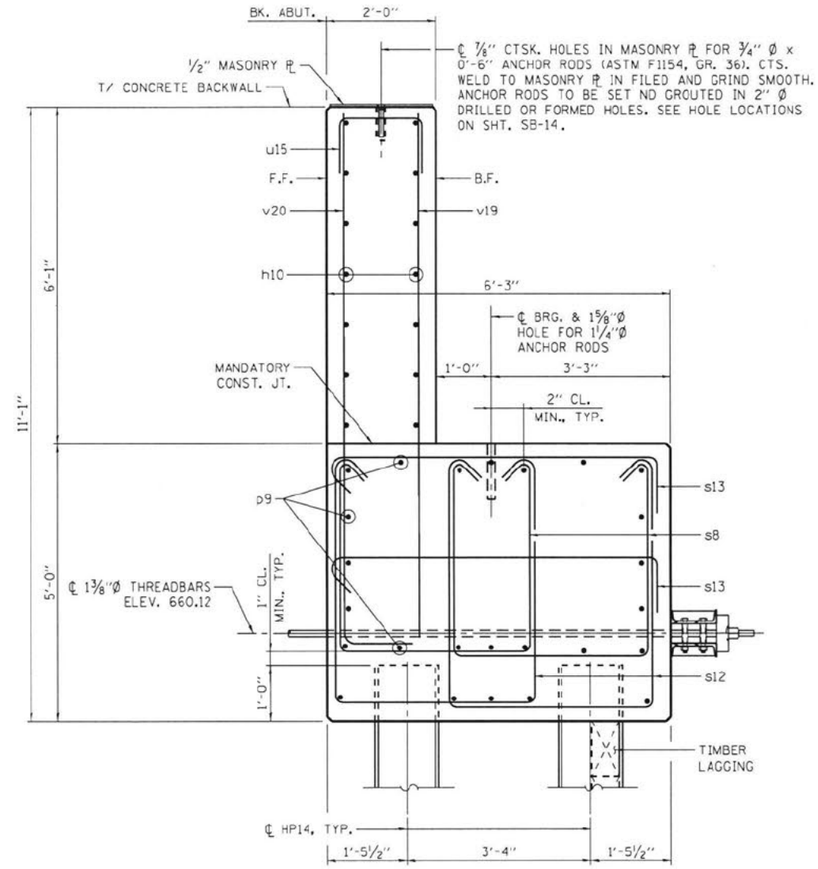


## SECTION A-A

## PILE DATA

TYPE: HP 14x89
NOMINAL REQUIRED BEARING: 158 KIP
FACTORED RESISTANCE AVAILABLE: 235 KIP
EST. LENGTH: 60 FEET
NO. PRODUCTION PILES: 17
NO. TEST PILES: 1

## NOTES:

1. SEE SHEET SB-11 FOR ABUTMENT DETAILS AND SHEET SB-12 FOR BILL OF MATERIALS AND BAR BENDING DIAGRAM.
2. SEE SHEET SB-14 FOR ANCHOR ROD LAYOUT.
3. DURING REMOVAL OF SHOO-FLY, PILES SHALL BE CUT-OFF AT ELEVATION 645.00
4. BRIDGE SEAT SHALL BE SLOPED ¼" BETWEEN BEARINGS TO PROVIDE DRAINAGE.
5. ALL PILES SHALL BE VIBRATED INTO PLACE. (1)

| | | | | | |
|---|---|---|---|---|---|
| DRAWN BY EBP | SCALE N.T.S. | Gannett Fleming | THE ILLINOIS STATE TOLL HIGHWAY AUTHORITY<br>2700 OGDEN AVENUE<br>DOWNERS GROVE, ILLINOIS 60515 | CONTRACT NO. I-18-4428 | SHEET NO. SB-10 |
| CHECKED BY JGC | DATE 5/9/2019 | | | CENTRAL TRI-STATE TOLLWAY TEMP. SHOOFLY ABUTMENT T3 PLAN AND ELEVATION | DRAWING NO. 326 OF 692 |

REVISIONS

| NO. | DATE | DESCRIPTION |
|---|---|---|
| 1 | 5/24/2019 | ADDENDUM NO. 1 |

Default
u:\4428-sht-2617-818-abut3.dgn
lmueller
5/22/2019 12:10:09 PM
5.33333 " / in.

## INDEX OF STRUCTURAL SHEETS


| | |
|---|---|
| TRW-1 | GENERAL PLAN & ELEVATION |
| TRW-2 | DETAILS |
| TRW-3 | SOIL BORING LOGS I |
| TRW-4 | SOIL BORING LOGS II |


## GENERAL NOTES

1. STATIONS AND OFFSETS OF THE WALL ARE RELATIVE TO ℄ OF BNSF RAILROAD AT THE FRONT FACE OF WALL AT THE BASE COURSE. WALL DESIGNER SHALL ADJUST SETBACK AS REQUIRED.
2. THE MAXIMUM ALLOWABLE SERVICE BEARING PRESSURE $Q_{MAX}$ IS 3,200 PSF. CONTRACTOR SHALL VERIFY SOIL PROPERTIES AND NOTIFY ENGINEER IF ADEQUATE BEARING VALVES ARE NOT ENCOUNTERED AT THE BOTTOM OF FOOTING ELEVATIONS.
3. MODIFICATIONS TO THE BLOCK WALL AND ADDITIONAL MATERIAL REQUIRED FOR INSTALLATION OF DRAINAGE SYSTEM (SHOWN ON THE DRAINAGE PLANS) AND FENCE POST SHALL BE INCLUDED IN THE COST OF SEGMENTAL CONCRETE BLOCK WALL.
4. A RODENT SHIELD AND HEADWALL SHALL BE PROVIDED FOR ALL PIPE UNDERDRAINS OUTLETING TO DAYLIGHT, IF PIPE UNDERDRAIN IS REQUIRED PER MANUFACTURER REQUIREMENTS. COST OF RODENT SHIELD, HEADWALL, AND PIPE UNDERDRAIN SHALL BE INCLUDED WITH SEGMENTAL CONCRETE BLOCK WALL.
5. SHOP DRAWINGS SHALL BE SUBMITTED TO BNSF RAILWAY FOR REVIEW AND APPROVAL PRIOR TO ORDERING MATERIAL. SEE UPRR/BNSF GUIDELINES FOR RAILROAD GRADE SEPARATION PROJECTS FOR SUBMITTAL REQUIREMENTS.
6. THE RETAINING WALL REMOVAL QUANTITY INCLUDED IN THE BILL OF MATERIAL IS FOR FULL REMOVAL OF TEMPORARY RETAINING WALL 1 AT THE END OF ITS USE.
7. A MINIMUM OF 10 YEAR DESIGN LIFE FOR TEMPORARY RETAINING WALLS SHALL BE INCLUDED IN THIS DESIGN. (1)

## BILL OF MATERIAL

| PAY ITEM | DESCRIPTION | UNIT | QUANTITY | RECORD QUANTITY |
|---|---|---|---|---|
| 50200100 | STRUCTURE EXCAVATION | CU YD | 191 | |
| 52200800 | SEGMENTAL CONCRETE BLOCK WALL | SQ FT | 3,152 | |
| Z0075496 | CONCRETE RETAINING WALL REMOVAL | FOOT | 389 | |
| JI606015 | GUTTER, TYPE G-2, MODIFIED | FOOT | 389 | |

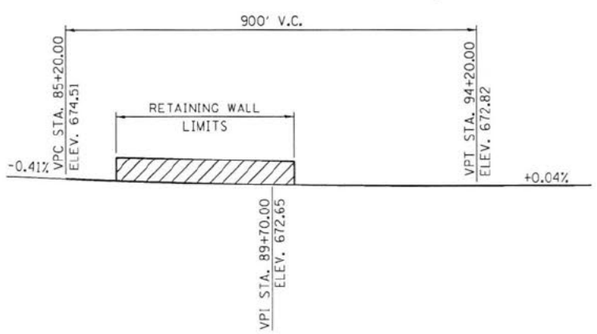


## PROFILE GRADE BNSF RAILROAD

(AT TOP OF RAIL)

## ABBREVIATIONS

| | |
|---|---|
| E.F. | EACH FACE |
| F.F. | FRONT FACE |
| B.F. | BACK FACE |
| I.F. | INSIDE FACE |
| O.F. | OUTSIDE FACE |
| B/ | BOTTOM OF |
| T/ | TOP OF |
| PROP. | PROPOSED |
| EXIST. | EXISTING |
| TEMP. | TEMPORARY |
| RET. | RETAINING |
| STA. | STATION |
| OFF. | OFFSET |
| ELEV. | ELEVATION |
| APPROX. | APPROXIMATE |
| TYP. | TYPICAL |
| MIN. | MINIMUM |
| MAX. | MAXIMUM |
| R.O.W. | RIGHT OF WAY |
| MH | MANHOLE |
| VOH | VILLAGE OF HINSDALE |
| VOWS | VILLAGE OF WESTERN SPRINGS |
| REQ'D | REQUIRED |
| EX. | EXCAVATION |

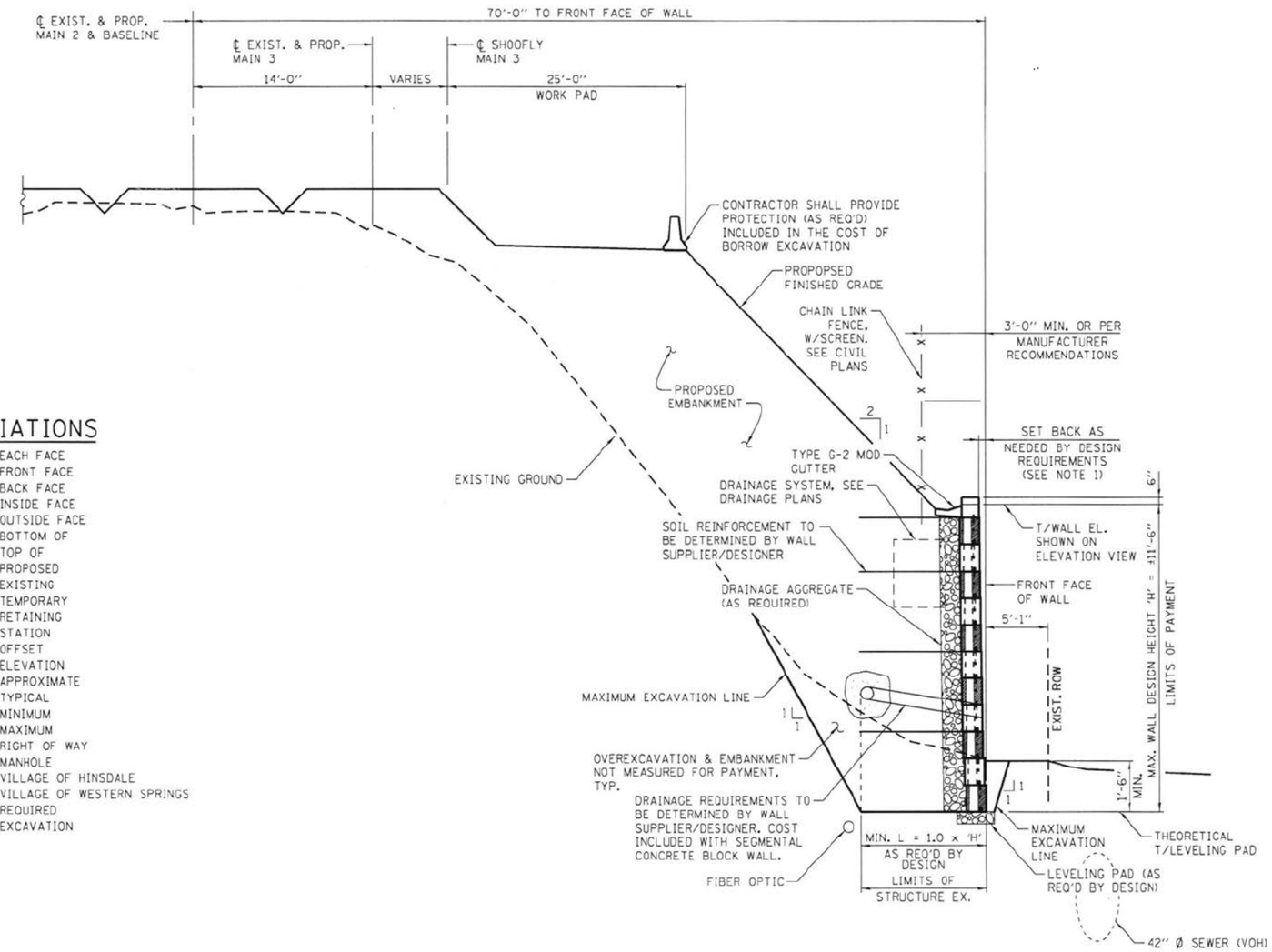


## TYPICAL SECTION THRU WALL

(LOOKING EAST)

| | | | |
|---|---|---|---|
| DRAWN BY | LAM | SCALE | N.T.S. |
| CHECKED BY | CA | DATE | 5/9/2019 |

Gannett Fleming

THE ILLINOIS STATE TOLL HIGHWAY AUTHORITY
2700 OGDEN AVENUE
DOWNERS GROVE, ILLINOIS 60515

| REVISIONS | | |
|---|---|---|
| NO. | DATE | DESCRIPTION |
| 1 | 5/24/2019 | ADDENDUM NO. 1 |

CONTRACT NO. I-18-4428

TEMPORARY RETAINING WALL 1
DETAILS

SHEET NO. TRW-2
DRAWING NO. 348 OF 692


Final
I-4428-sht-TRW-002-details.dgn
12:18:18 PM
5/22/2019
32.00000 " / in.

## INDEX OF STRUCTURAL SHEETS


| | |
|---|---|
| TRW-5 | GENERAL PLAN & ELEVATION |
| TRW-6 | DETAILS |
| TRW-7 | SOIL BORING LOGS I |
| TRW-8 | SOIL BORING LOGS II |


## GENERAL NOTES

1. STATIONS AND OFFSETS OF THE WALL ARE RELATIVE TO ℄ OF BNSF RAILROAD AT THE FRONT FACE OF WALL AT THE BASE COURSE. WALL DESIGNER SHALL ADJUST SETBACK AS REQUIRED.
2. THE MAXIMUM ALLOWABLE SERVICE BEARING PRESSURE $Q_{MAX}$ IS 3,200 PSF. CONTRACTOR SHALL VERIFY SOIL PROPERTIES AND NOTIFY ENGINEER IF ADEQUATE BEARING VALVES ARE NOT ENCOUNTERED AT THE BOTTOM OF FOOTING ELEVATIONS.
3. MODIFICATIONS TO THE PRECAST MODULAR RETAINING WALL AND ADDITIONAL MATERIAL REQUIRED FOR INSTALLATION OF FENCE POST SHALL BE INCLUDED IN THE COST OF PRECAST MODULAR RETAINING WALL. DRAINAGE SYSTEM (SHOWN ON THE DRAINAGE PLANS) SHALL BE LOCATED OUTSIDE THE RETAINING WALL LIMITS.
4. A RODENT SHIELD AND HEADWALL SHALL BE PROVIDED FOR ALL PIPE UNDERDRAINS OUTLETING TO DAYLIGHT. IF PIPE UNDERDRAIN IS REQUIRED PER MANUFACTURER REQUIREMENTS. COST OF RODENT SHIELD, HEADWALL, AND PIPE UNDERDRAIN SHALL BE INCLUDED WITH PRECAST MODULAR RETAINING WALL.
5. SHOP DRAWINGS SHALL BE SUBMITTED TO BNSF RAILWAY FOR REVIEW AND APPROVAL PRIOR TO ORDERING MATERIAL. SEE UPRR/BNSF GUIDELINES FOR RAILROAD GRADE SEPARATION PROJECTS FOR SUBMITTAL REQUIREMENTS.
6. TEMPORARY OR PERMANENT MECHANICALLY STABILIZED EARTH RETAINING WALLS WILL NOT BE PERMITTED FOR THIS LOCATION.
7. IF THE PROPOSED WALL DESIGN CONTAINS TIE BACKS, THEY SHALL BE REMOVED IN THEIR ENTIRETY, AND NO PORTION MAY REMAIN WITHIN THE EMBANKMENT.
8. THE RETAINING WALL REMOVAL QUANTITY INCLUDED IN THE BILL OF MATERIAL IS FOR FULL REMOVAL OF TEMPORARY RETAINING WALL 2 AT THE END OF ITS USE.
9. A MINIMUM OF 10 YEAR DESIGN LIFE FOR TEMPORARY RETAINING WALLS SHALL BE INCLUDED IN THIS DESIGN. (1)

## BILL OF MATERIAL

| PAY ITEM | DESCRIPTION | UNIT | QUANTITY | RECORD QUANTITY |
|---|---|---|---|---|
| 50200100 | STRUCTURE EXCAVATION | CU YD | 228 | |
| 52200700 | PRECAST MODULAR RETAINING WALL | SQ FT | 1,915 | |
| Z0075496 | CONCRETE RETAINING WALL REMOVAL | FOOT | 165 | |
| JI606015 | CUTTER, TYPE G-2, MODIFIED | FOOT | 165 | |

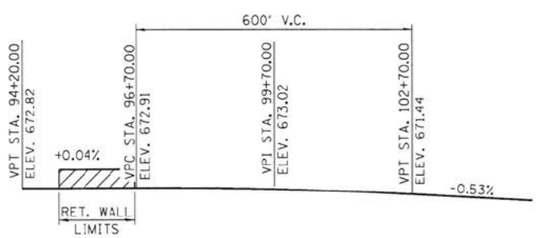


## PROFILE GRADE BNSF RAILROAD

(AT TOP OF RAIL)

## ABBREVIATIONS

| | |
|---|---|
| E.F. | EACH FACE |
| F.F. | FRONT FACE |
| B.F. | BACK FACE |
| I.F. | INSIDE FACE |
| O.F. | OUTSIDE FACE |
| B/ | BOTTOM OF |
| T/ | TOP OF |
| PROP. | PROPOSED |
| EXIST. | EXISTING |
| TEMP. | TEMPORARY |
| RET. | RETAINING |
| STA. | STATION |
| OFF. | OFFSET |
| ELEV. | ELEVATION |
| APPROX. | APPROXIMATE |
| TYP. | TYPICAL |
| MIN. | MINIMUM |
| MAX. | MAXIMUM |
| R.O.W. | RIGHT OF WAY |
| MH | MANHOLE |
| VOH | VILLAGE OF HINSDALE |
| VOWS | VILLAGE OF WESTERN SPRINGS |
| REQ'D | REQUIRED |
| EX. | EXCAVATION |
| FCWRD | FLAGG CREEK WATER RECLAMATION DISTRICT |
| SAN. | SANITARY |

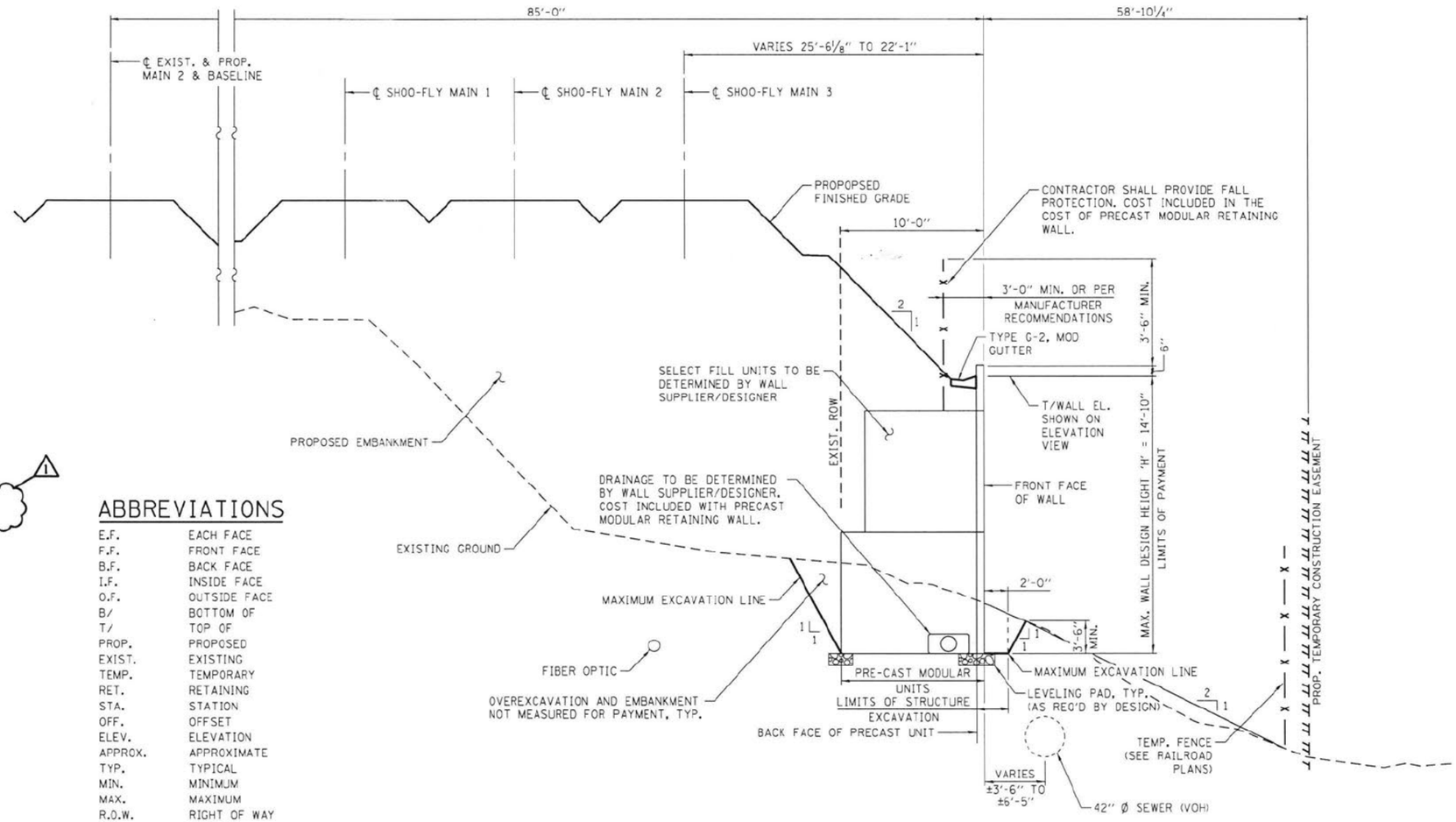


## TYPICAL SECTION THRU WALL

(LOOKING EAST)

| | | | |
|---|---|---|---|
| DRAWN BY | LAM | SCALE | N.T.S. |
| CHECKED BY | CA | DATE | 5/9/2019 |

Gannett Fleming

THE ILLINOIS STATE TOLL HIGHWAY AUTHORITY
2700 OGDEN AVENUE
DOWNERS GROVE, ILLINOIS 60515

| REVISIONS | | |
|---|---|---|
| NO. | DATE | DESCRIPTION |
| 1 | 5/24/2019 | ADDENDUM NO. 1 |

CONTRACT NO. I-18-4428

TEMPORARY RETAINING WALL 2
DETAILS

SHEET NO. TRW-6
DRAWING NO. 352 OF 692

Final
...\4428-sht-TRW2-002-details.dgn
32.0000 " / in
5/22/2019 12:18:11 PM

## INDEX OF STRUCTURAL SHEETS


| | |
|---|---|
| TRW-9 | GENERAL PLAN & ELEVATION |
| TRW-10 | DETAILS |
| TRW-11 | SOIL BORING LOGS I |
| TRW-12 | SOIL BORING LOGS II |
| TRW-13 | SOIL BORING LOGS III |


## GENERAL NOTES

1. STATIONS AND OFFSETS OF THE WALL ARE RELATIVE TO ℄ OF BNSF RAILROAD AT THE FRONT FACE OF WALL AT THE BASE COURSE. WALL DESIGNER SHALL ADJUST SETBACK AS REQUIRED.
2. THE MAXIMUM APPLIED SERVICE BEARING PRESSURE $Q_{MAX}$ SHALL BE 3,700 PSF. CONTRACTOR SHALL VERIFY SOIL PROPERTIES AND NOTIFY ENGINEER IF ADEQUATE BEARING VALVES ARE NOT ENCOUNTERED AT THE BOTTOM OF FOOTING ELEVATIONS.
3. MODIFICATIONS TO THE WALL AND ADDITIONAL MATERIAL REQUIRED FOR INSTALLATION OF FENCE POST SHALL BE INCLUDED IN THE COST OF PRECAST MODULAR RETAINING WALL, AND DETAILS COORDINATED WITH FENCE CONTRACTOR.
4. MODIFICATIONS TO THE WALL AND ADDITIONAL MATERIAL REQUIRED FOR INSTALLATION OF DRAIANGE SYSTEM (SHOWN ON DRAINAGE PLANS) SHALL BE INCLUDED IN THE COST OF PRECAST MODULAR RETAINING WALL.
5. A RODENT SHIELD AND HEADWALL SHALL BE PROVIDED FOR ALL PIPE UNDERDRAINS OUTLETING TO DAYLIGHT. IF PIPE UNDERDRAIN IS REQUIRED PER MANUFACTURER REQUIREMENTS. COST OF RODENT SHIELD, HEADWALL, AND PIPE UNDERDRAIN SHALL BE INCLUDED WITH PRECAST MODULAR RETAINING WALL.
6. SHOP DRAWINGS SHALL BE SUBMITTED TO BNSF RAILWAY FOR REVIEW AND APPROVAL PRIOR TO ORDERING MATERIAL. SEE UPRR/BNSF GUIDELINES FOR RAILROAD GRADE SEPARATION PROJECTS FOR SUBMITTAL REQUIREMENTS.
7. SEE GROUND IMPROVEMENT PLANS FOR ADDITIONAL DETAILS.
8. TEMPORARY FILL SHALL NOT BE MEASURED FOR PAYMENT, BUT SHALL BE INCLUDED IN THE COST OF RETAINING WALL REMOVAL.
9. THE RETAINING WALL REMOVAL QUANTITY INCLUDED IN THE BILL OF MATERIAL IS FOR FULL REMOVAL OF TEMPORARY RETAINING WALL 3 AT THE END OF ITS USE IN ADDITION TO THE PARTIAL REMOVAL OF THE EXISTING MSE WALL LOCATED BEHIND TEMPORARY RETAINING WALL 3. LIMITS OF REMOVAL FOR THE EXISTING MSE WALL ARE SHOWN ON SHEET $TRW3GPE$
10. FRONT FACE OF PERMANENT WALL SHALL HAVE A SIMULATED LIMESTONE FINISH AS SPECIFIED IN THE FORMLINER SPECIAL PROVISION. COST OF THE ARCHITECTURAL FINISH SHALL BE INCLUDED IN THE COST OF PRECAST MODULAR RETAINING WALL.
11. WALL COPING SHALL BE DESIGNED TO SUPPORT THE ATTACHED RAILING AND SATISFY THE REQUIREMENTS OF SPECIFICATION 522.10.
12. A MINIMUM OF 10 YEAR DESIGN LIFE FOR TEMPORARY RETAINING WALLS SHALL BE INCLUDED IN THIS DESIGN. (1)

## ABBREVIATIONS

| | |
|---|---|
| E.F. | EACH FACE |
| F.F. | FRONT FACE |
| B.F. | BACK FACE |
| I.F. | INSIDE FACE |
| O.F. | OUTSIDE FACE |
| B/ | BOTTOM OF |
| T/ | TOP OF |
| PROP. | PROPOSED |
| EXIST. | EXISTING |
| TEMP. | TEMPORARY |
| RET. | RETAINING |
| STA. | STATION |
| OFF. | OFFSET |
| ELEV. | ELEVATION |
| APPROX. | APPROXIMATE |
| TYP. | TYPICAL |
| MIN. | MINIMUM |
| MAX. | MAXIMUM |
| R.O.W. | RIGHT OF WAY |
| MH | MANHOLE |
| VOH | VILLAGE OF HINSDALE |
| VOWS | VILLAGE OF WESTERN SPRINGS |
| REQ'D | REQUIRED |
| EX. | EXCAVATION |
| MSE | MECHANICALLY STABILIZED EARTH |
| CONST. | CONSTRUCTION |
| W/ | WITH |

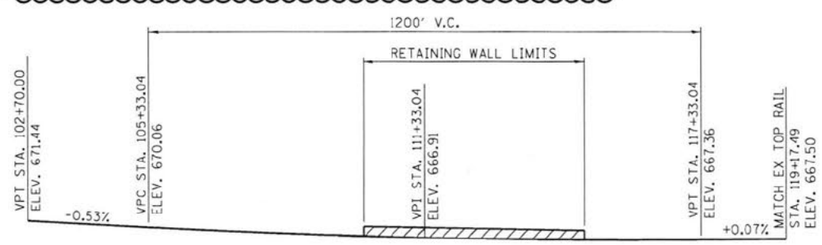


## PROFILE GRADE BNSF RAILROAD

(AT TOP OF RAIL)

## BILL OF MATERIAL

| PAY ITEM | DESCRIPTION | UNIT | QUANTITY | RECORD QUANTITY |
|---|---|---|---|---|
| 50200100 | STRUCTURE EXCAVATION | CU YD | 1,981 | |
| 52200700 | PRECAST MODULAR RETAINING WALL | SQ FT | 8,798 | |
| Z0075496 | CONCRETE RETAINING WALL REMOVAL | FOOT | 522 | |
| J1606015 | GUTTER, TYPE G-2, MODIFIED | FOOT | 522 | |
| | | | | |
| | | | | |

* CONTRACTOR SHALL PROVIDE PROTECTION (AS REQ'D) INCLUDED IN THE COST OF BORROW EXCAVATION

** DRAINAGE TO BE DETERMINED BY WALL SUPPLIER/DESIGNER. COST INCLUDED WITH PRECAST MODULAR RETAINING WALL.

*** LIMITS OF STRUCTURE EXCAVATION MEASURED FROM BACK OF PRECAST UNITS TO 2'-0" INFRONT OF WALL.

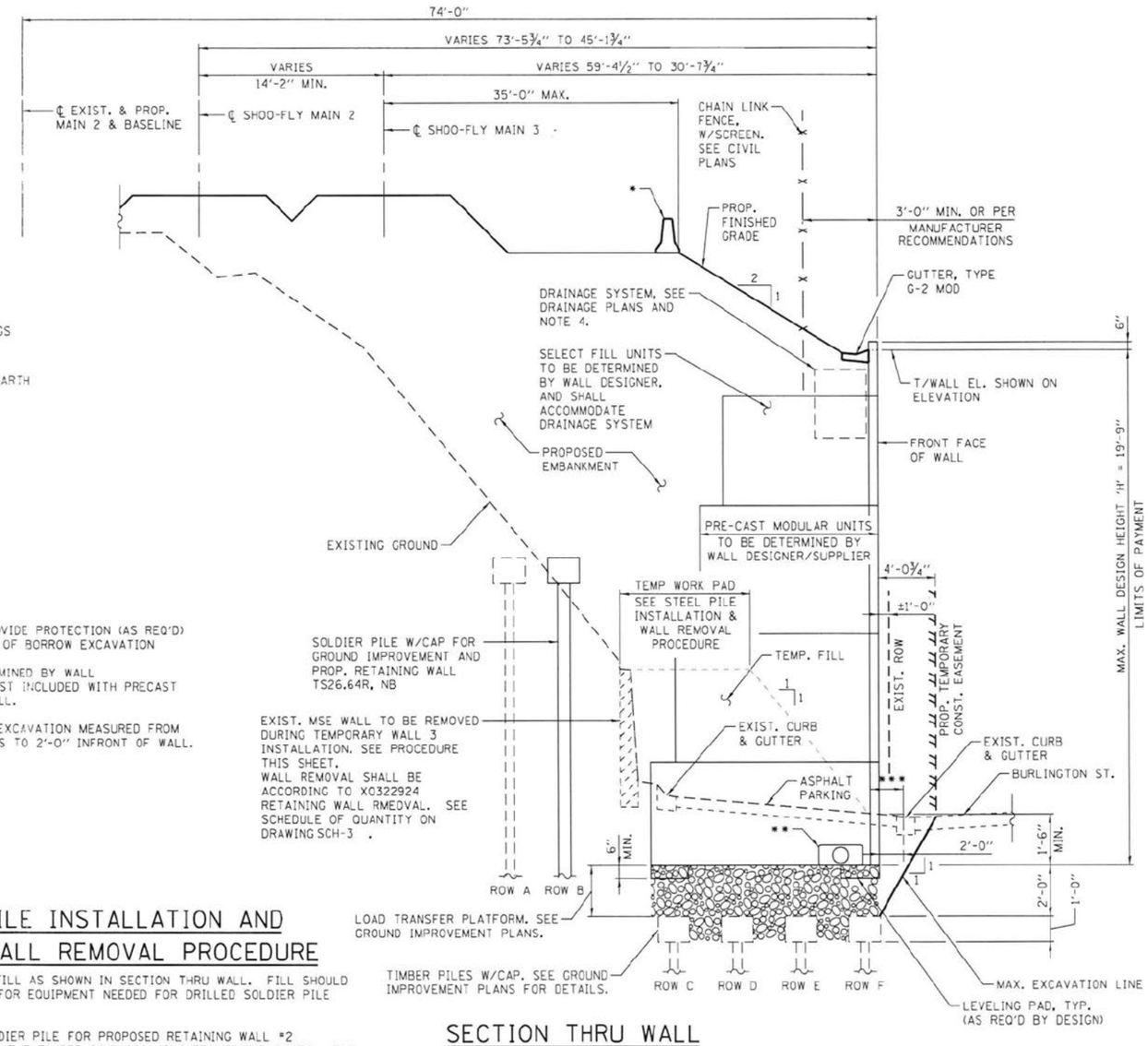


## SECTION THRU WALL

(LOOKING EAST)

## STEEL PILE INSTALLATION AND EXISTING WALL REMOVAL PROCEDURE

1. INSTALL TEMPORARY FILL AS SHOWN IN SECTION THRU WALL. FILL SHOULD ACT AS A WORK PAD FOR EQUIPMENT NEEDED FOR DRILLED SOLDIER PILE INSTALLATION.
2. INSTALL DRILLED SOLDIER PILE FOR PROPOSED RETAINING WALL #2 (TS26.64R, NB) WITHIN THE TIMBER PILE GROUND IMPROVEMENT LIMITS. THE REMAINING SOLDIER PILES MAY BE INSTALLED DURING REMOVAL OF THE SHOO-FLY EMBANKMENT. SEE SHEETS PRW-8 TO PRW-18 FOR WALL DETAILS.
3. INSTALL SOLDIER PILE LAGGING TO TOP OF EXISTING RETAINING WALL.
4. INCREMENTALLY REMOVE EXISTING MSE WALL AND TEMPORARY FILL WHILE INSTALLING TIMBER LAGGING FOR RETAINING WALL #2 (TS26.64R, NB). INSTALL LAGGING DOWN TO EXCAVATION REQUIRED TO INSTALL PRECAST MODULAR RETAINING WALL AND TIMBER PILES.
5. REMOVE EXISTING ASPHALT PAVEMENT. SEE ROADWAY PLANS.

NOTE: TEMPORARY FILL AND EXCAVATION REQUIRED TO INSTALL SOLDIER PILES WILL NOT BE MEASURED FOR PAYMENT AND INCLUDED IN THE COST OF PRECAST MODULAR RETAINING WALL.

## INDEX OF STRUCTURAL SHEETS


TRW-14 GENERAL PLAN & ELEVATION
TRW-15 DETAILS
TRW-16 SOIL BORING LOGS I


## GENERAL NOTES

1. STATIONS AND OFFSETS OF THE WALL ARE RELATIVE TO ℄ OF BNSF RAILROAD AT THE FRONT FACE OF WALL AT THE BASE COURSE. WALL DESIGNER SHALL ADJUST SETBACK AS REQUIRED.
2. THE MAXIMUM ALLOWABLE SERVICE BEARING PRESSURE $Q_{MAX}$ IS 3,200 PSF. CONTRACTOR SHALL VERIFY SOIL PROPERTIES AND NOTIFY ENGINEER IF ADEQUATE BEARING VALVES ARE NOT ENCOUNTERED AT THE BOTTOM OF FOOTING ELEVATIONS.
3. MODIFICATIONS TO THE BLOCK WALL AND ADDITIONAL MATERIAL REQUIRED FOR INSTALLATION OF DRAINAGE SYSTEM (SHOWN ON THE DRAINAGE PLANS) AND FENCE POST SHALL BE INCLUDED IN THE COST OF SEGMENTAL CONCRETE BLOCK WALL.
4. A RODENT SHIELD AND HEADWALL SHALL BE PROVIDED FOR ALL PIPE UNDERDRAINS OUTLETING TO DAYLIGHT, IF PIPE UNDERDRAIN IS REQUIRED PER MANUFACTURER REQUIREMENTS. COST OF RODENT SHIELD, HEADWALL, AND PIPE UNDERDRAIN SHALL BE INCLUDED WITH SEGMENTAL CONCRETE BLOCK WALL.
5. SHOP DRAWINGS SHALL BE SUBMITTED TO BNSF RAILWAY FOR REVIEW AND APPROVAL PRIOR TO ORDERING MATERIAL. SEE UPRR/BNSF GUIDELINES FOR RAILROAD GRADE SEPARATION PROJECTS FOR SUBMITTAL REQUIREMENTS.
6. THE RETAINING WALL REMOVAL QUANTITY INCLUDED IN THE BILL OF MATERIAL IS FOR FULL REMOVAL OF TEMPORARY RETAINING WALL 4 AT THE END OF ITS USE.
7. A MINIMUM OF 10 YEAR DESIGN LIFE FOR TEMPORARY RETAINING WALLS SHALL BE INCLUDED IN THIS DESIGN. (1)

## BILL OF MATERIAL

| PAY ITEM | DESCRIPTION | UNIT | QUANTITY | RECORD QUANTITY |
|---|---|---|---|---|
| 50200100 | STRUCTURE EXCAVATION | CU YD | 57 | |
| 52200800 | SEGMENTAL CONCRETE BLOCK WALL | SQ FT | 760 | |
| Z0075496 | CONCRETE RETAINING WALL REMOVAL | FOOT | 95 | |
| J1606015 | GUTTER, TYPE G-2, MODIFIED | FOOT | 95 | |

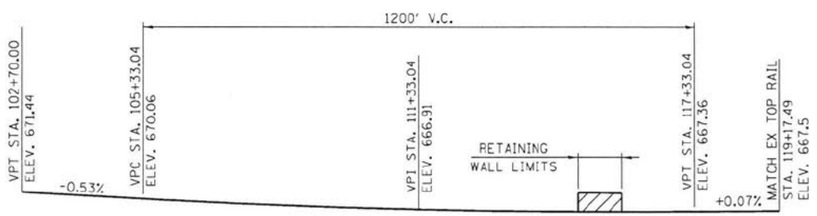


## PROFILE GRADE BNSF RAILROAD

(AT TOP OF RAIL)

## ABBREVIATIONS

| | |
|---|---|
| E.F. | EACH FACE |
| F.F. | FRONT FACE |
| B.F. | BACK FACE |
| I.F. | INSIDE FACE |
| O.F. | OUTSIDE FACE |
| B/ | BOTTOM OF |
| T/ | TOP OF |
| PROP. | PROPOSED |
| EXIST. | EXISTING |
| TEMP. | TEMPORARY |
| RET. | RETAINING |
| STA. | STATION |
| OFF. | OFFSET |
| ELEV. | ELEVATION |
| APPROX. | APPROXIMATE |
| TYP. | TYPICAL |
| MIN. | MINIMUM |
| MAX. | MAXIMUM |
| R.O.W. | RIGHT OF WAY |
| MH | MANHOLE |
| VOH | VILLAGE OF HINSDALE |
| VOWS | VILLAGE OF WESTERN SPRINGS |
| REQ'D | REQUIRED |
| EX. | EXCAVATION |

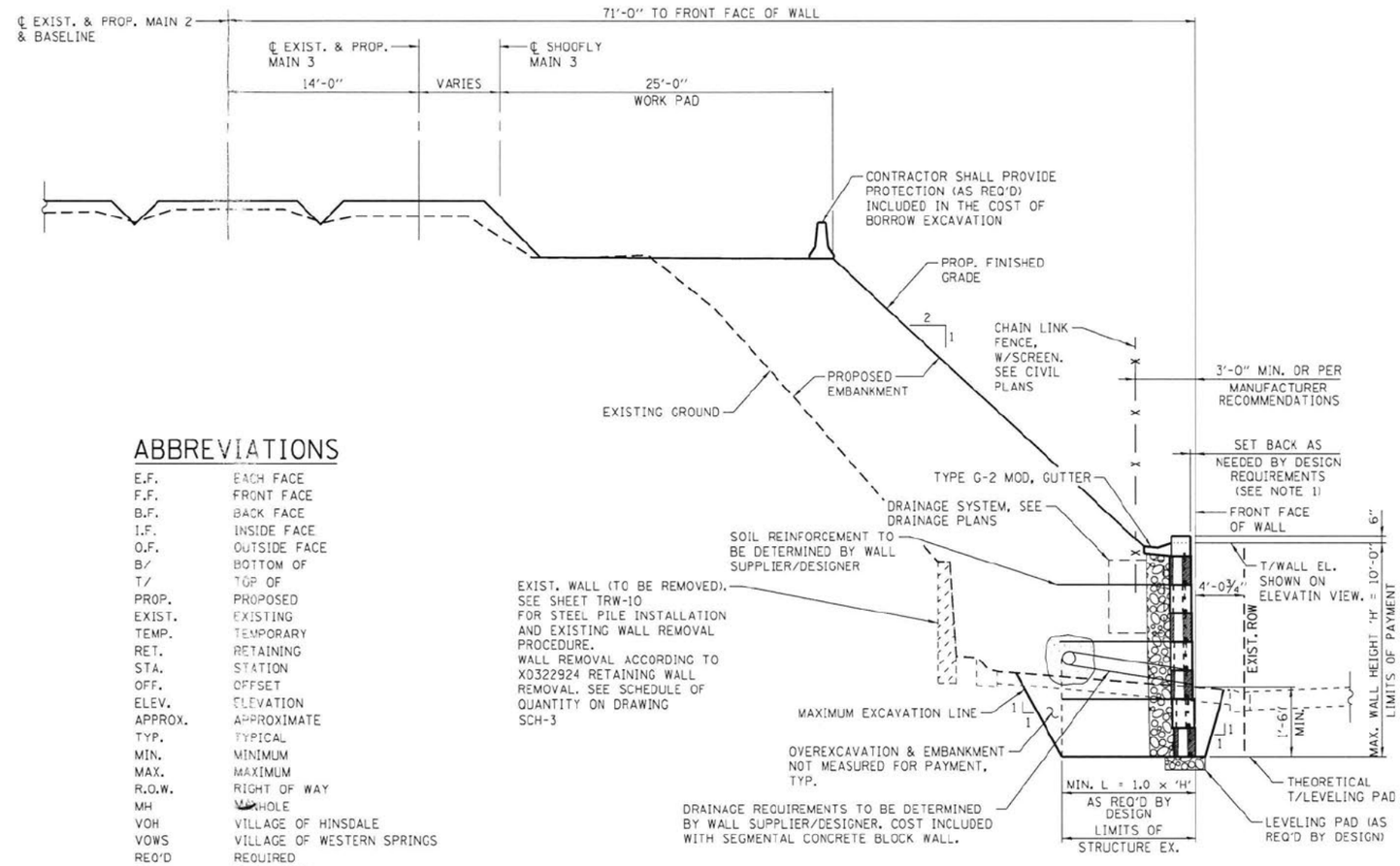


## TYPICAL SECTION THRU WALL

(LOOKING EAST)

| | | | |
|---|---|---|---|
| DRAWN BY | LAM | SCALE | N.T.S. |
| CHECKED BY | CA | DATE | 5/9/2019 |

Gannett Fleming

THE ILLINOIS STATE TOLL HIGHWAY AUTHORITY
2700 OGDEN AVENUE
DOWNERS GROVE, ILLINOIS 60515

REVISIONS

| NO. | DATE | DESCRIPTION |
|---|---|---|
| 1 | 5/24/2019 | ADDENDUM NO. 1 |

CONTRACT NO. I-18-4428

TEMPORARY RETAINING WALL 4 DETAILS

SHEET NO. TRW-15
DRAWING NO. 361 OF 692


Final ...\4428-sht-TRW4-002-details.dgn 12:08:43 PM
32.0000 ' / in. 5/22/2019

# Capital Program

## MEETING MINUTES

**PURPOSE/PROJECT #:** Pre-Bid Meeting / I-18-4428

**MEETING DATE/TIME:** Thursday May 16, 2019 @ 10:00 AM

**CHAIRPERSON:** Mo Faraj, Tollway

**LOCATION:** Tollway CA – Room 175

**ISSUE DATE:** May 21, 2019

**PREPARED BY:** Dan Filice – Gannett Fleming\ Bowman, Barrett & Assoc.

**DISTRIBUTE TO:** Attendees per Sign-In Sheet

## MEETING MINUTES

| Item | Description | Responsibility | Due Date |
|---|---|---|---|
| 1.0 | **Introductions & Roles**<br>The meeting attendees introduced themselves. | Info | N/A |
| 2.0 | **Project Description**<br>The project overview including replacement of the BNSF RR Bridge over the Tri-State Tollway and M.P. 26.6 was provided. The project is located between the Village of Hinsdale and Western Springs, with the Highlands Metra station to the West and Western Springs Metra Station to the East. Three parks are located in three quadrants and the Village of WS public works facility is located in the fourth. A brief description of project scope was provided and includes, but not limited to the following:<br>Replacement of the BNSF RR Bridge. Three tracks will be maintained on temporary shoo-fly alignment and 4 traffic mainline lanes will be open throughout project duration. One of the shoo-fly tracks will remain and converted to a MOW track by the BNSF RR. Other work includes shoulder reconstruction and widening; mainline pavement patching; drainage improvements and culvert extensions; temporary earth embankment supporting temporary railroad tracks; ground improvements consisting of timber piling; permanent and temporary retaining walls; erosion control measures and landscaping improvements; maintenance of traffic; temporary and permanent lighting; fiber optic infrastructure installation including conduits only. FO cable will be installed by others. | Info | N/A |
| 3.0 | **Project Schedule**<br>• Bid Opening – June 6, 2019<br>• Anticipated Notice to Proceed – August 2, 2019 | Info | N/A |

**PURPOSE/PROJECT #:** Pre-Bid Meeting / I-18-4428

**MEETING DATE/TIME:** Thursday May 16, 2019 @ 10:00 AM

| | | | |
|---|---|---|---|
| | • Interim Completion 1 (Fiber optic conduits installed in SB shoulder, for tie-in to Tollway FO duct bank) – October 15, 2019<br>• Interim Completion 2 (All work completed allowing BNSF to mobilize and install shoo-fly alignment track) – August 3, 2020;<br>• Interim Completion 3 (All work completed allowing BNSF to mobilize and install permanent alignment track) – August 9, 2021<br>• Commencement of Work – August 2, 2019<br>• Substantial Contract Completion – June 15, 2022<br>• Contract Completion – July 29, 2022 | | |
| **4.0** | **Special Items to Note**<br>**4.1 Coordination with:** | | |
| | 4.1.1 Utilities – S.P. 106<br>• ComED, ATT – relocation has started. Facilities to be placed within Hillgrove and Burlington Ave.<br>• Century Link – 2 lines (1 duct bank & 1 spur line). The 4428 Contractor will install conduits, FO will be by others.<br>• MWRD & FCWRD facility, (one behind the West and East Abut; other crosses under the open Flagg Creek channel.<br>• Tollway Fiber Optic – Will be temporarily relocated to the Southbound side during construction, and returned to the northbound side during the Mainline Contract. | | |
| | 4.1.2 Other Contractors – S.P. 106.1<br>• I-18-4438 – Advance FO contract<br>• Future ML contracts – advance work; mainline work, others TBD. | | |
| | 4.1.3 Hinsdale, Western Springs, & Western Springs Park District – S.P. 106.2, 106.3, & 106.4 | | |
| | 4.1.4 Federal Aviation Administration – S.P. 106.5<br>Part I of the Permit submitted by DSE; Part 2 to be completed by the Contractor. DSE Assumptions included in Part I shall be verified by the Contractor. | | |
| | 4.1.5 Permitting Agencies – S.P. 106.6<br>• IEPA permit submitted for Watermain & Sewer CSO;<br>• BNSF permit for pipe jacking submitted<br>• 404 ACOE Permit anticipated June 2019<br>• IDNR-OWR – permit secured<br>• | | |

| | | | |
|---|---|---|---|
| | 4.1.6 BNSF Railway – S.P. 106.7<br>• Right of Entry and working within ROW requirements included | | |
| **4.2** | **Constrained Construction Schedule** | | |
| | 4.2.1 Parcel TW-5-16-067 (Availability 9/3/19) - No impacts to the Tennis Courts permitted. Partial access to site permitted as long as no impacts to tennis courts or disturbance during tennis tournament. | | |
| | 4.2.2 Local ordinances related to working hours – SP 109<br>• Special events in parks + general working hours listed;<br>• Pierce Park hosts Little League and is important to the Village that operations are not impacted by the work. | | |
| | 4.2.3 BNSF track outages – SP 109<br>• ALL track outage times need to be coordinated and approved by the RR. Times included in the Special Provisions are anticipated allowable times for the track outages<br>• Note on parade or holiday weekends track outages are not permitted due to Metra operations. | | |
| **4.3** | **Project Site** | | |
| | 4.3.1 All access to the work site shall come from I-294.<br>• Access thru Mainline work zone and use of Temporary and Permanent Easement areas expected to be utilized. Use of Village streets is not permitted unless coordination and authorization are provided by the Engineer.<br>• Advance coordination is needed with Villages for work being performed.<br>• Work zone shall always be secured. | | |
| | 4.3.2 Village of Western Springs Well – Village water supply<br>• Permanent backup generator shall be installed prior to installation of Temporary generator or beginning Retaining Wall TS26.65R, NB work (located within the public works yard.)<br>• Temporary backup generator shall be installed prior to construction of Retaining Wall TS26.65R, NB.<br>• De-energizing of the ComEd line over Retaining Wall TS26.65R, NB will be allowed to construct the wall. The Temporary generator will operate the well pump during the de-energizing timeframe. | | |
| | 4.3.3 Village of Hinsdale CSO Treatment Facility<br>• Treatment Building in the south-west quadrant near Flagg Creek is critical to village and cannot be impacted. | | |

**PURPOSE/PROJECT #:** Pre-Bid Meeting / I-18-4428

**MEETING DATE/TIME:** Thursday May 16, 2019 @ 10:00 AM

| | | | |
|---|---|---|---|
| | • Sewer line feeding into the building is being replaced under this contract. | | |
| | 4.3.4 Other notable items:<br>• Existing NAW removal located along the SB shoulder near Pierce Park shall occur after the Proposed NAW is installed along Pierce Park Right of Way.<br>• Vibration monitoring required at several locations;<br>• Video documentation of Village of Western Springs facilities as referenced in the Special Provision;<br>• Webcam and CCTV camera installation included in this contract. | | |
| **5.0** | **Revisions to Contract/Addendums** | | |
| | 5.1 Addendum No. 1: Expected Issuance around May 21, 2019<br>5.2 Addendum No. 2: Expected Issuance around May 30, 2019 | | |
| **6.0** | **Diversity**<br>6.1 DBE – 20.00%<br>6.2 VOSB – 1.00%<br>6.3 Earned Credit Program (ECP) Bid Credit Cap - $500,000<br>6.4 EEO Goal – 19.6% and 6.9% for female.<br>6.5 A brief overview of the various programs available was provided, including Partnering for Growth (P4G) Program. Brochures were made available to Contractor's highlighting the various programs. | | |
| **7.0** | **List of Bidder Questions**<br>Questions to be sent to Illinois Tollway, attention Mohamad Faraj, email mfaraj@getipass.com by 2:00 p.m. local time on May 24, 2019. | | |
| **8.0** | **Open Discussion** | | |
| | 8.1 Construction bulletin 19-01 may be issued in the near future, and states no overnight full stop closures on Friday-Saturday or Saturday-Sunday is permitted. This revision will be included in a future addendum. | | |
| | 8.2 Questions included in the open discussion will be presented with the "Request for Information Received from Plan Holders" to be included with a future Addendum. | | |

Please notify the preparer of any corrections and/or clarifications within 5 business days.

**Next Meeting Date:** N/A

## THE ILLINOIS STATE TOLL HIGHWAY AUTHORITY

### I-18-4428 Tri-State Tollway (I-294), Bridge Reconstruction (BN 261) Burlington Northern Santa Fe Railway (BNSF) over the Tri-State Tollway (I-294)

Date: May 24, 2019
Re: Request for Information Received from Plan Holders

---

***QUESTION #1***
Can the Tollway please verify the Pay Item Numbers for "Uncontaminated Soil Disposal"? They are missing from the Special Provisions (J-105).

***ANSWER #1***
*There are no pay items associated with "Uncontaminated Soil Disposal". The disposal of uncontaminated soil is included with pay item 20200100 EARTH EXCAVATION.*

---

***QUESTION #2***
Can you please confirm the bid date of 4428? The Tollway bid calendar has June 11th, however the Advertisement in the plans has June 6th.

***ANSWER #2***
*The bid date for Contract I-18-4428 is June 6, 2019. The bid calendar has been updated.*

---

***QUESTION #3***
The Index of Drawings indicate on page 206 (GRD-9) there is proposed grading for Ogden Interchange. Please verify the proposed linework as the current plans just show existing.

***ANSWER #3***
*There is stockpiled material available in the southeast and southwest infield areas of the Ogden Avenue Interchange for use in Contract I-18-4428. Drawing 206 (GRD-9) is intended to show the proposed grading after the removal of the stockpiled material in the southeast and southwest infields.*

---

***QUESTION #4***
Can the Tollway please verify the grading plans for Burlington Avenue and Hillgrove Avenue?

***ANSWER #4***
*Final grading along Hillgrove and Burlington Ave shall meet existing conditions, except as shown on the plans.*

---

***QUESTION #5***
Will the Tollway allow the stockpiling and permanent storage of excess material, at the end of the project, at the Ogden Avenue Interchange stockpile location?

***ANSWER #5***
*No.*

---

***QUESTION #6***
What is the required design life of the temporary retaining walls?

***ANSWER #6***
*Plans have been revised indicating a minimum design life of 10 years is required and are included in this addendum.*

***QUESTION #7***
What is the required design life of the permanent retaining walls?

***ANSWER #7***
*The design life of the permanent retaining walls shall be according to the Tollway Structure Design Manual, March 2019, Section 22.6.*

***QUESTION #8***
Please provide the performance specifications for the segmental concrete block retaining walls. Please identify the scope of the design by the contractor as noted on Sheet J-1.

***ANSWER #8***
*Special provision will be revised in the addendum. Segmental concrete block retaining walls shall be according to Section 522 of the IDOT Standard Specifications.*

***QUESTION #9***
Please provide the performance specifications for the precast modular retaining wall. Please identify the scope of the design by the contractor as noted on Sheet J-1.

***ANSWER #9***
*Special provision will be revised in the addendum. Precast modular retaining walls shall be according to Section 522 of the IDOT Standard Specifications.*

***QUESTION #10***
Tobi Engineering, Inc. manufactures Laminated Bearing and Rocker Bearing Assemblies. The Type I Special Bearings for this project have Keeper Bars and Retainer Plates welded to the bottom side of the Bearing Plate and there is a note that states "bond pad to bearing plate". We have a catch 22 situation because the Laminated Pad cannot be vulcanized to the Bearing Plate after the Keeper Bars and Retainer Plates are welded and the Keeper Bars and Retainer Plates cannot be welded after the Laminated Pads are vulcanized without burning the Elastomer. Once the Laminated Pads are vulcanized to the Bearing Plates, there is no need for the Keeper Bars and Retainer Plates. Please advise.

***ANSWER #10***
*Retainer plates and keeper bars are required. The Contractor may substitute alternate bonding material as recommended by the Manufacturer/Supplier for review and acceptance by the Engineer.*

***QUESTION #11***
According to Special Provision S.P. 121 Electronic Data Files Available, there are CADD, DTM, and TIN files available for the I-18-4428 project. Where or when will theses be posted?

***ANSWER #11***
*The Electronic Data Files listed in Special Provision 121 are currently available on the Tollways Online Plan Room under Contract I-18-4428.*

***QUESTION #12***
Please clarify Note 15 on Sheet 414 (CUL-20) of the contract drawings, which states "15. FOR RESTRICTIONS ON SITE ACCESS AND STAGING, SEE GENERAL NOTES 11 THRU 13 ON SHEET $GN03$ FOR ADDITIONAL DETAILS."

This note refers to "NOTES 11 THRU 13 ON SHEET $GN03$", which do not seem to be included in the contract documents.

***ANSWER #12***
*The note will be deleted as part of a future addendum. Note these requirements are listed in the Special Provisions.*

***QUESTION #13***
Is the calculated weight of structural steel 3,789, 100 lbs. shown on SA-2 only for bridge BN261 (SA-1 to SA- 48) or includes 745,400 lbs. (SB-2) weight of temp. shoofly (SB-1 to SB-30)?

***ANSWER #13***
*The 3,789,100 lbs on SA-2 accounts only for the structural steel shown on sheets SA-1 through SA-48. The 745,400 lbs shown on SB-2 account for only the structural steel shown between SB-1 and SB-30.*

***QUESTION #15***
*Pre-Bid Meeting Open Discussion question:* Clarification requested that the plans indicate all work zone access will be from I-294 and use of local streets not allowed.

***ANSWER #15***
*Confirmed.*

***QUESTION #16***
*Pre-Bid Meeting Open Discussion question:* Engineering professional liability insurance requirements is for 5 years. There are pay items needed for temporary works that will be complete prior to or at project completion. Is the 5-year term required for temporary items too?

***ANSWER #16***
*This requirement is applicable to all items listed in the Special Provision.*

***QUESTION #17***
*Pre-Bid Meeting Open Discussion question:* Regarding Park work restrictions times and noise, Saturday time restrictions in Veeck and Peirce Park may impact schedule. Can work be performed during those times? What is excessive noise? Suggest adding decibel limits in the Specifications.

***ANSWER #17***
*Advance coordination is required with Village and Park District identifying construction schedule. Work to be performed within the restricted timeframes will require authorized by the Village and/or Park District.*

***QUESTION #18***

*Pre-Bid Meeting Open Discussion question:* Regarding Timber Piling Notes and requirements:

1. Page 268 Note 1b – discusses testing procedures and reanalyzing pile after 2 weeks, but doesn't state how to reanalyze (opinion is to include this as a separate pay item).
2. Note 3 – states if a production pile fails to meet bearing requirements, the Engineer will direct the contractor to drive another pile at their expense – this isn't the contractor's fault if procedures and installation followed correctly and should not be responsible to bear the cost of the additional pile.
3. P. 266 – installation of shoring to be completed per "Union Pacific – general excavation zones". This document does not exist. Also, if shoring is required, this work shall not be included in the cost. The RR requirements are not clear.

***ANSWER #18***

1. *The test pile shall be reanalyzed using PDA. All PDA testing and retesting of the is included in the cost of the test piles. Plan note will be revised in a future addendum to clarify plan intent.*
2. *Plan Note will be revised in a future addendum.*
3. *Plan note will be revised in a future addendum to clarify intent. The note was regarding the upper row of timber piles. The revision will indicate that the cap installation work shall be performed during existing Main #3 track temporary outage, and embankment shall be restored after pile cap installation during the same outage as well. If at the Contractor's elects to complete this work while Main #3 is in service, embankment benching or temporary shoring maybe needed according to the "UPRR/BNSF Guidelines for Temporary Shoring", and if so, this work will not be measured for payment but included in the cost of Precast Concrete Caps.*

***QUESTION #19***

*Pre-Bid Meeting Open Discussion question:* Why is Mass Concrete required for the Abutments? Verify if Pier requires Mass Concrete as well.

***ANSWER #19***

*Mass concrete is required for the abutment. Per the Special Provision, the construction joint does not allow the pour width to be reduced, and therefore the entire abutment dimension qualifies for Mass Concrete, as well as the Pier.*

***QUESTION #20***

*Pre-Bid Meeting Open Discussion question*: Is Shoo-Fly Structural Steel being painted?

***ANSWER #20***

*The plans call for the Shoo-Fly temporary span structural steel to be weathering steel.*

***QUESTION #21***

*Pre-Bid Meeting Open Discussion question*: Sheet 137 - pipe jacking of 48" diameter pipe – is disposal of excess material paid for as non-special? Please verify.

***ANSWER #21***

*The excavation of in-situ soil for the jacking/receiving pits and pipe installation is not measured for payment separately but included in the pipe-jacking work. Any disposal of excess material required which*

*is classified as Non-Special Waste will be measured for payment. Clarification will be provided in a future addendum.*

---

***QUESTION #22***

*Pre-Bid Meeting Open Discussion question:* Railroad may require ballast and sub-ballast to be removed and disposed. This may potentially be classified as Non-Special or Special Waste. Verify that plan quantities include this removal and classification provided.

***ANSWER #22***

*Clarification will be provided in a future addendum.*

---

***QUESTION #23***

*Pre-Bid Meeting Open Discussion question:* Are timber railroad crossing included?

***ANSWER #23***

*An application to have the BNSF RR install temporary crossing is included in the Special Provisions.*

---

***QUESTION #24***

*Pre-Bid Meeting Open Discussion question:* Structural steel for permanent and temporary bridges are listed as lump sum. Consider separating into two separate lump sum pay items.

***ANSWER #24***

*It is typical for Tollway projects to include multiple bridge locations into one pay item since it is lump sum, and is not separated into two separate items.*

---

***QUESTION #25***

*Pre-Bid Meeting Open Discussion question:* Verify the DBE requirements for this contract. Concern is the large allowance item is included to accounted for BNSF RR forces to complete their work. Confirmation is requested that this value will not be used to calculate the DBE participation value.

***ANSWER #25***

*Pay Item JT154103 ALLOWANCE FOR RAILROAD FLAGGING AND SERVICES will not be included for DBE and VOSB participation. It will be excluded from the DBE and VOSB participation calculations at the time of bid and for final DBE and VOSB achievement at the end of the contract.*

---

***QUESTION #26***

*Pre-Bid Meeting Open Discussion question:* Structural steel general notes include a note stating the total pick weight for four girders with plates attached. Is the intension to have this erected as a unit? Or is this shown for shop-fit up? Is shop fit up required?

***ANSWER #26***

*This note will be removed from the drawings in an addendum. The contractor's means and methods for erecting structural steel are not dictated in the plans. Also, shop fit-up is required and the plan notes provide these requirements.*

**I-18-4428 Tri-State Tollway (I-294), Bridge Reconstruction (BN 261) Burlington Northern Santa Fe Railway (BNSF) over the Tri-State Tollway (I-294)**

Date: May 24, 2019
Re: Request for Information Received from Plan Holders

***QUESTION #27***

1. For pay item JT132820 (CCTV Camera, ITS Assembly), please advise if there will be an ITS Pole Mounted Enclosure included with this item, and where that enclosure will be paid.
2. For pay item JT132820 (CCTV Camera, ITS Assembly), please advise how this camera will be getting powered, and where this will be paid.

***ANSWER #27***

1. *Enclosure is required and pay item will be included in a future addendum.*
2. *The I-18-4428 will install handholes and conduits for powering the CCTV as shown on Drawing 235. Power source will be obtained for source included in Contract I-18-4438. Plans will be modified to include these additional Items in a future addendum.*

TABLE OF CONTENTS


PART I: Instructions

| | |
|---|---|
| Bid Schedule and Information | A-1 |
| Construction Bid Check List | CL-1 – CL-3 |
| Instruction and Information to Bidders | I-1 thru I-10 |

PART II: Bid Requirements

| | |
|---|---|
| Prevailing Wage - Counties | 1 thru 9 |
| Bid | P-1 thru P-30 |
| Bid Bond (**Insert after P-Pages**) | |
| Forms A or Forms B Disclosures | N-1 thru N-2 |
| Responsible Bidder Affidavit | PA-1 |
| Bidder Preferences | R-1, R-2 |
| Bidder List of Individual Contacts | R-3 |
| Affidavit | R-4 |
| Plant and Equipment Questionnaire | S-1 thru S-6 |
| Current Contractual Obligations | S-7 |
| Disadvantaged Business Enterprise Participation & Utilization Plan | DBE-1 thru DBE-20 |
| Equal Employment Opportunity Program | EEO-1 thru EEO-9 |
| Veteran Small Business Participation & Utilization Plan | VOSB-1 thru VOSB-10 |
| Bid Credit Incentive Programs | BCP-1 thru BCP-5 |
| Illinois Tollway Standard Business Terms and Conditions | TC-1 thru TC-9 |

PART III: Contract Requirements

| | |
|---|---|
| Contract Bond Agreement | T-1 thru T-5 |
| Performance Bond | U-1, U-2 |
| Payment Bond | V-1, V-2 |
| Insurance | I-4 |

VOLUME II


| | |
|---|---|
| SPECIAL PROVISIONS | J-1 thru J-467 |
| SPECIAL PROVISIONS | BDE-1 thru BDE-2 |
| SPECIAL PROVISIONS | GBSP-1 thru GBSP-17 |

# PART I - INSTRUCTIONS


| | |
|---|---|
| Bid Schedule and Information | A-1 |
| Construction Bid Checklist | CL-1 – CL-3 |
| Instruction and Information to Bidders | I-1 – I-10 |

**THE ILLINOIS STATE TOLL HIGHWAY AUTHORITY**

**ADVERTISEMENT FOR SEALED BIDS**

**Bid Schedule and information for**

**CONTRACT NO: I-18-4428**

Sealed Bids for the above numbered Contract as described below will be received by the Illinois Tollway at its offices, at 2700 Ogden Avenue, Downers Grove, Illinois 60515, until 10:30:00 a.m., local time, June 25, 2019, at which time the Bids will be opened and the bids read aloud.

An **optional pre-bid meeting** is scheduled for May 16, 2019 at the Central Administration Building in Downers Grove, at 2700 Ogden Avenue. The meeting will be held in Conference Room 175 at 10:00 AM.

The work to be done under this Contract shall be started on or about August 9, 2019. All work under this Contract shall be completed by July 29, 2022.

The work under this Contract shall consist of: Replacement of structure carrying the BNSF Railroad over the Tri-State Tollway (BN 261), Temporary shoo-fly structure carrying the BNSF Railroad over the Tri-State Tollway, Shoulder reconstruction and widening, Mainline pavement patching as necessary, Drainage improvements and culvert extensions, Temporary earth embankment supporting temporary railroad tracks, Ground improvements consisting of timber piling, Permanent and Temporary retaining walls, Erosion control measures and landscaping improvements, Temporary and permanent lighting, and Maintenance of Traffic.

The work under this Contract is to be performed on: the Tri-State (I-294) Tollway at Mile Post 26.6 in Cook County, Illinois.

Bidders may be required to be pre-qualified by the Illinois Department of Transportation (IDOT).

IDOT Prequalification required: ☒YES ☐NO If 'NO', ignore any reference to IDOT Prequalification within the remainder of this document.

Joint Ventures shall be limited to no more than 3 individually IDOT-pre-qualified members.

Bidders are also required to be registered, or submit evidence of application, with the Illinois Department of Human Rights (IDHR). **There are NO EXCEPTIONS.**

Please note that written or oral communications received by the Illinois Tollway in connection with this solicitation may be required to be reported to the Procurement Policy Board as required by law. This provision is not intended to prohibit communications with State employees regarding a procurement matter, but rather only requires reporting of those communications when they occur.

All bids must be on forms prescribed by the Illinois Tollway and must comply with the terms and conditions set forth in the Contract Documents. Copies of the plans, special provisions, bid forms and other Contract Documents for this Contract are available from BHFX Digital Imaging and can be viewed and/or ordered for purchase by visiting the On-line Plan Room via www.illinoistollwaybidding.com. Copies of the current Illinois Tollway Supplemental Specifications to the Illinois Department of Transportation Standard Specifications for Road and Bridge Construction can be purchased directly from BHFX Digital Imaging. The current Illinois Tollway Supplemental Specifications may also be viewed in the 'Doing Business' section on the Tollway website. Current Illinois Department of Transportation Standard Specifications for Road and Bridge Construction, Supplemental Specifications and Recurring Special Provisions can be viewed and purchased from the Illinois Department of Transportation website. Electronic copies of the contract documents are also available on compact disk (CD) from BHFX Digital Imaging. Copies are in a portable document format (PDF). **Bidders with questions or in need of assistance in purchasing Contract Documents are to contact a** BHFX Digital Imaging, **Customer Service Representative at 630-393-0777, ask for the Plan Room.**

Questions pertaining to the intent of the Contract Documents may be sent to the Illinois Tollway, attention Mohamad Faraj @ mfaraj@getipass.com, to be received no later than 2:00 p.m. local time on May 24, 2019.

A completed Questionnaire and a statement of Current Contractual Obligations on forms supplied by the Illinois Tollway will be required from the apparent low Bidder once the apparent low Bidder is determined. Each Bid must be accompanied by a Bid Guaranty in the amount of five (5%) per cent of the total amount shown in the Bid for the Contract. The Bid Guaranty shall be in the form of an acceptable bid bond or a bank draft, certified check or cashier's check drawn on a solvent bank made payable to the Illinois State Toll Highway Authority.

Award of the above Contract, if any award be made, will be to the lowest responsive and responsible Bidder or Bidders. The Illinois Tollway reserves the right to reject any and all Bids, to waive technicalities, or cancel the solicitation.

***COPIES OF PLANS, SPECIAL PROVISIONS, BID FORMS, CONTRACT DOCUMENTS, STANDARD SPECIFICATIONS AND SUPPLEMENTAL SPECIFICATIONS ARE NOT AVAILABLE AT THE TOLLWAY CENTRAL ADMINISTRATION BUILDING.***

**DATE: May 9, 2019**

**THE ILLINOIS STATE TOLL HIGHWAY AUTHORITY**

**ADVERTISEMENT FOR SEALED BIDS**

**Bid Schedule and Information for**

**CONTRACT NO: I-18-4428**

Sealed Bids for the above numbered Contract as described below will be received by the Illinois Tollway at its offices, at 2700 Ogden Avenue, Downers Grove, Illinois 60515, until 10:30:00 a.m., local time, June 6, 2019, at which time the Bids will be opened and the bids read aloud.

An **optional pre-bid meeting** is scheduled for May 16, 2019 at the Central Administration Building in Downers Grove, at 2700 Ogden Avenue. The meeting will be held in Conference Room 175 at 10:00 AM.

The work to be done under this Contract shall be started on or about August 2, 2019. All work under this Contract shall be completed by July 29, 2022.

The work under this Contract shall consist of: Replacement of structure carrying the BNSF Railroad over the Tri-State Tollway (BN 261), Temporary shoo-fly structure carrying the BNSF Railroad over the Tri-State Tollway, Shoulder reconstruction and widening, Mainline pavement patching as necessary, Drainage improvements and culvert extensions, Temporary earth embankment supporting temporary railroad tracks, Ground improvements consisting of timber piling, Permanent and Temporary retaining walls, Erosion control measures and landscaping improvements, Temporary and permanent lighting, and Maintenance of Traffic.

The work under this Contract is to be performed on: the Tri-State (I-294) Tollway at Mile Post 26.6 in Cook County, Illinois.

Bidders may be required to be pre-qualified by the Illinois Department of Transportation (IDOT).
IDOT Prequalification required: ☒YES ☐NO If 'NO', ignore any reference to IDOT Prequalification within the remainder of this document.

Joint Ventures shall be limited to no more than 3 individually IDOT-pre-qualified members.

Bidders are also required to be registered, or submit evidence of application, with the Illinois Department of Human Rights (IDHR). **There are NO EXCEPTIONS.**

Please note that written or oral communications received by the Illinois Tollway in connection with this solicitation may be required to be reported to the Procurement Policy Board as required by law. This provision is not intended to prohibit communications with State employees regarding a procurement matter, but rather only requires reporting of those communications when they occur.

All bids must be on forms prescribed by the Illinois Tollway and must comply with the terms and conditions set forth in the Contract Documents. Copies of the plans, special provisions, bid forms and other Contract Documents for this Contract are available from BHFX Digital Imaging and can be viewed and/or ordered for purchase by visiting the On-line Plan Room via www.illinoistollwaybidding.com. Copies of the current Illinois Tollway Supplemental Specifications to the Illinois Department of Transportation Standard Specifications for Road and Bridge Construction can be purchased directly from BHFX Digital Imaging. The current Illinois Tollway Supplemental Specifications may also be viewed in the 'Doing Business' section on the Tollway website. Current Illinois Department of Transportation Standard Specifications for Road and Bridge Construction, Supplemental Specifications and Recurring Special Provisions can be viewed and purchased from the Illinois Department of Transportation website. Electronic copies of the contract documents are also available on compact disk (CD) from BHFX Digital Imaging. Copies are in a portable document format (PDF). **Bidders with questions or in need of assistance in purchasing Contract Documents are to contact a** BHFX Digital Imaging, **Customer Service Representative at 630-393-0777, ask for the Plan Room.**

Questions pertaining to the intent of the Contract Documents may be sent to the Illinois Tollway, attention Mohamad Faraj @ mfaraj@getipass.com, to be received no later than 2:00 p.m. local time on May 24, 2019.

A completed Questionnaire and a statement of Current Contractual Obligations on forms supplied by the Illinois Tollway will be required from the apparent low Bidder once the apparent low Bidder is determined. Each Bid must be accompanied by a Bid Guaranty in the amount of five (5%) per cent of the total amount shown in the Bid for the Contract. The Bid Guaranty shall be in the form of an acceptable bid bond or a bank draft, certified check or cashier's check drawn on a solvent bank made payable to the Illinois State Toll Highway Authority.

Award of the above Contract, if any award be made, will be to the lowest responsive and responsible Bidder or Bidders. The Illinois Tollway reserves the right to reject any and all Bids, to waive technicalities, or cancel the solicitation.

***COPIES OF PLANS, SPECIAL PROVISIONS, BID FORMS, CONTRACT DOCUMENTS, STANDARD SPECIFICATIONS AND SUPPLEMENTAL SPECIFICATIONS ARE NOT AVAILABLE AT THE TOLLWAY CENTRAL ADMINISTRATION BUILDING.***

**DATE: May 9, 2019**

June 26th, 2019

Mr. Sean C. Walsh, President
Walsh Construction Company II, LLC
929 W. Adams Street
Chicago, IL 60607

Subject: Illinois Tollway Contract I-18-4428
Bridge Reconstruction (BN 261)
Burlington Northern Santa Fe Railway (BNSF)
Over the Tri-State Tollway (I-294)
Tri-State Tollway Mile Post 26.6.
Apparent Low Bidder - Additional Required Bid Documents

Dear Mr. Walsh:

Congratulations! This letter is to inform you that Walsh Construction Company II, LLC, has been determined to be the apparent low bidder on this solicitation. To complete your bid package, the Tollway is requesting the documents listed below. The required document list can be found in Volume I of the solicitation on the page titled "Documents Required from Apparent Low Bidder Upon Request from the Tollway to Complete Bid Package". In accordance with the solicitation, please provide the following documents in hard copy or electronic format no later than **5:00:00 PM on July 1, 2019** to:

Contract Services – I-18-4428
Illinois State Toll Highway Authority
2700 Ogden Ave.
Downers Grove, IL 60515
constructionbid@getipass.com

**Required Documents:**

- Disadvantaged Business Enterprise Participation and Utilization (See DBE Special Provision)
  DBE 2025(s)
- Veterans Small Business Participation and Utilization (See VOSB Special Provision)
  VOSB 2025(s)
- Equal Employment Opportunity Workforce Projection (See EEO Special Provision)
  EEO 1256(s)
- Plant and Equipment Questionnaire and Current Contractual Obligations (See Section I # 9 and Section S)

| Diversity Information | DBE | Veteran |
|---|---|---|
| (1) Advertised Goal (percentage) | 20% | 1% |
| (2) Core Bid Amount, as verified by Tollway review of P-Pages | $56,402,869.87 | |
| (3) Commitment in dollars, as verified by Tollway review of Form 2026 | $11,403,674.87 | $1,149,079.60 |
| (4) Commitment in percent, as calculated from (3)/(2) | 20.21% | 2.03% |
| The DBE Commitment calculated | __X__meets/exceeds the advertised goal<br>_____has approved waiver request | |
| The Veteran Commitment calculated | __X__meets/exceeds the advertised goal<br>_____has approved waiver request | |

Nothing in this letter shall be construed as a determination of responsiveness or responsibility. The Tollway is still reviewing bids and will need time to review the supplemental documentation provided in response to this letter. This letter is not a guarantee of award, and acceptance of your bid is still subject to the approval of the Tollway and the State. Walsh Construction Company II, LLC, is not to commence work on the above referenced solicitation until it receives an Authorization to Proceed from the Tollway. Thank you for your prompt attention to this matter.

In addition please be aware that once the determination of responsiveness and responsibility has been made, per the Illinois Procurement Code section (30 ILCS 500/50-35), the Tollway will be requesting financial disclosures for all subcontractors with participation in excess of $50,000 that have been identified in your bid package including DBE 2025, VOSB 2025 and Page 8 of the Standard Business Terms and Conditions. Delay in submitting the required financial disclosures may result in a delay in issuing Notice to Proceed.

Should you have any questions, please do not hesitate to contact me.

[redacted]

Laura Durkin
General Manager of Engineering
630-241-6800 Extension 4802
ldurkin@getipass.com

CC:

Paul Kovacs
Lanyea Griffin
Mohamad Faraj
Shanel Bailey
Paul Lanzo
Audra Degonia
File: LT_Tollway_LD_4428_PostBidDocumentRequest_06252019_03_01_10

## Bailey, Shanel

**From:** Bailey, Shanel
**Sent:** Wednesday, June 26, 2019 9:05 AM
**To:** Bailey, Shanel
**Subject:** Walsh - FEIN [redacted]

```
OCIS  CICIOCP1              OFFSET CONTRACT INQUIRY            08:57 06/26/19

ACTION: S

              VENDOR NUMBER= [redacted]                        OFFSET: 00 OF 00
                VENDOR NAME: *
     CLAIMING AGENCY NUMBER: *
       CLAIMING AGENCY NAME: *
CLAIMING AGENCY PHONE NUMBER: *

DISCLAIMER:
AS OF 06/26/19 AT 08:57 OUR INVOLUNTARY WITHHOLDING SYSTEM DOES NOT HAVE AN
ACTIVE CLAIM AGAINST VENDOR NUMBER [redacted] . PLEASE BE ADVISED THAT OUR
SYSTEM ONLY CONTAINS CLAIMS FILED BY STATE AGENCIES PURSUANT TO 15 ILCS 405/
10.05. A VENDOR MAY BE DELIQUENT IN A DEBT TO THE STATE OF ILLINOIS, BUT THE
DEBT MAY NOT BE RECORDED ON OUR INVOLUNTARY WITHHOLDING SYSTEM.

*


ENTER=PROCESS,  PF3=IOCM,  PF12=REFRESH
```

E-MAIL CONFIDENTIALITY NOTICE: This electronic mail message, including any attachments, is for the intended recipient(s) only. This e-mail and any attachments might contain information that is confidential, legally privileged or otherwise protected or exempt from disclosure under applicable law. If you are not a named recipient, or if you are named but believe that you received this e-mail in error, please notify the sender immediately by telephone or return e-mail and promptly delete this e-mail and any attachments and copies thereof from your system. If you are not the intended recipient, please be aware that any copying, distribution, dissemination, disclosure or other use of this e-mail and any attachments is unauthorized and prohibited. Your receipt of this message is not intended to waive any applicable privilege or claim of confidentiality, and any prohibited or unauthorized disclosure is not binding on the Illinois State Toll Highway Authority. Thank you for your cooperation.

Walsh Construction Company II, LLC
I-18-4428

| Documents Required with the Bid<br>Bidder should use this checklist to ensure that all required documents are completed and included with its bid. | | | | |
|---|---|---|---|---|
| **Required Documents** | **Reference Volume I** | **Comments and Important Information** | | **Included with Bid** ✓ |
| **Forms A (22 pages)**<br>**or**<br>**Forms B (3 or more pages)** | Section N | Forms A or Forms B must be submitted with the bid or the bid will be considered non-responsive. | If a Joint Venture, must be submitted for each Joint Venture Partner | ✓ FORM B |
| **Disadvantaged Business Enterprise**<br>• **DBE 2026-Utilization Plan**<br>• **DBE 2023 if needed** | Section I #27 DBE Special Provision | Required for all solicitations with DBE goals. See DBE Special Provision for additional information. If goal is 0% the forms are not required.<br>2023 included w/ Bid | | ✓ 2026 |
| **Veteran Small Business Participation and Utilization**<br>• **VOSB 2026-Utilization Plan**<br>• **VOSB 2023 if needed** | Section I #28 VOSB Special Provision | Required for all solicitations with Veteran goals. See Veterans Special Provision for additional information. If goal is 0% the form is not required.<br>2023 Included w/ Bid | | ✓ 2026 |
| **Optional**<br>**Bid Credit Incentive Program Certificates** | Section I #30<br><br>Bid Credit Incentive Programs Special Provision | If Bid Credit is utilized, Bid Credit Certificates are required in bid submittal See Bid Credit Incentive Programs Special Provision for additional information | | ✓ |
| **Page P-1 with Addendum noted, Page P-2 with Bid Guaranty completed, Page P-3 completed with signatures, P-4** | Section I-#4 P-Pages | Fill in all available pay item prices with values of $0.01 or greater. | | ✓ |
| **Bid Bond, Signature and Corporate Seal** | Page 2 and 3 of the "P" Pages | If a Joint Venture, Bid Bond must be in the name of the Joint Venture.<br>Signature and Corporate Seal page (last) must be submitted for each Joint Venture Partner. | | ✓ |

| | | | |
|---|---|---|---|
| **Preferences, Contacts and Affidavit** | Section R | If a Joint Venture, must be submitted for each Joint Venture Partner. | ✓ |
| **IDOT Certificate of Eligibility (If required—See Page A-1)** | A-1 & Section I #9 | If a Joint Venture, required from each Joint Venture Partner (If required) | ✓ |
| **Non-Collusion Affidavit** | Page R-4 | If a Joint Venture, must be submitted for each Joint Venture Partner | ✓ |
| **Tollway Standard Terms & Conditions** | Section TC | If a Joint Venture, must be submitted for each Joint Venture Partner | ✓ |

## Documents Required from Apparent Low Bidder Upon Request from the Tollway to Complete Bid Package

**Once the apparent low Bidder is determined, the Tollway will request these documents**

| | | |
|---|---|---|
| **Disadvantaged Business Enterprise DBE 2025(s)** | Section I #27 & DBE Special Provision | Required for all solicitations with DBE goals. See DBE Special Provision for additional information |
| **Veteran Small Business Participation and Utilization**<br>• **VOSB 2025(s)** | Section I #28 & VOSB Special Provision | Required for all solicitations with Veteran goals. See Veterans Special Provision for additional information |
| **Equal Employment Opportunity**<br>• **EEO 1256** | Section I #29 & EEO Special Provision | Required for solicitations when included on the notice to Apparent Low Bidder |
| **Plant and Equipment Questionnaire and Current Contractual Obligations** | Section I #9 & Section S | If a Joint Venture, submit for each Joint Venture partner.<br>Included w/Bid |
| **Responsible Bidder Affidavit PA-1 signed and Notary Seal** | Section I #37 | If a Joint Venture, must be submitted for each Joint Venture Partner. Included w/Bid |

## The Following Will Be Verified by the Tollway for the Low Apparent Bidder

| | | |
|---|---|---|
| **Authority to Transact Business in Illinois - Secretary of State Certificate of Good Standing** | Section I #10 | If a Joint Venture, will be verified for each Joint Venture Partner.<br>Included w/Bid |
| **Illinois Dept. of Human Rights** | Section I #9 & #26 | If a Joint Venture, will be verified for each Joint Venture Partner Included w/Bid |
| **State Board of Elections** | Section I #25 | If a Joint Venture, Will be verified for each Joint Venture Partner Included w/Bid |

| Documents Required from Lowest Responsive/Responsible Bidder Upon Request from the Tollway<br>(Notice of Intent e-mail will be sent requesting these items | | |
|---|---|---|
| **Agreement** | Section T | If a Joint Venture, must be signed by both Joint Venture Partners |
| **Performance Bond** | Section U | If a Joint Venture, must be executed by both Joint Venture Partners |
| **Payment Bond** | Section V | If a Joint Venture, must be executed by both Joint Venture Partners |
| **Insurance** | Section I #17 | If a Joint Venture insurance must be in the name of both Joint Venture Partners |
| **Evidence of authority of company representatives to execute the Contract, such as Board of Directors' Minutes, or a resolution authorizing officers of the firm to execute the Contract Documents** | | |
| **Certificates showing authorization to do business in Illinois if your firm is not an Illinois corporation.** | | |
| **Any supplemental financial or experience information if requested by the Illinois Tollway.** | | |
| **A completed Signature Authority Form designating any and all individuals to execute on behalf of the company any and all contract modifications or documentation** | | |
| **If a Joint Venture, a copy of the executed Joint Venture Agreement between all partners that identifies the Managing Partner. Unless specifically directed otherwise in writing by the joint venture, the Managing Partner's FEIN will be used for payment and tax purposes** | | |
| **A completed W-9 form if this is the first time the company is conducting business with the Tollway as a Prime Contractor. Please refer to the following link for the most current IRS W-9 form: http://www.irs.gov/pub/irs-pdf/fw9.pdf** | | |
| **A copy of your IRS Assignment/Acceptance Letter if this is the first time the company is conducting business with the Tollway as a Prime Contractor, or if it has been a long time since you have done work with the Tollway and have never provided the document.** | | |
| **As applicable to the Contract, Proof of Certification from each firm listed on DBE Form(s) 2025 and or VOSB Form(s) 2025. Please refer to the Special Provision for Disadvantaged Business Enterprise Participation and the Veteran Small Business Participation and Utilization Plan for a list of Certifying Agencies accepted by the Tollway. Proof of Certification includes Original letter of Certification, Certification Certificate, or the company listing in the Certifying Agency's database.** | | |

# INSTRUCTIONS AND INFORMATION TO BIDDERS

1. **ADVERTISEMENT FOR BIDS**

Bids will be received by the Illinois State Toll Highway Authority for constructing a portion of the Illinois Toll Highway System, as described in the Advertisement for Sealed Bids.

2. **EXAMINATION OF CONTRACT DOCUMENTS AND WORK SITE**

Before submitting a Sealed Bid, the Bidder shall carefully examine the provisions of the contract bid documents. The Bidder shall also inspect in detail the site of the proposed work, investigate and become familiar with all conditions affecting the contract, and the detailed requirements of construction. Bidders will be held responsible for having done so.

3. **CONTRACT DOCUMENTS (TO BE COMPLETED IN INK)**

The Contract Documents for this Contract shall be as defined in Section 101 of the Tollway Supplemental Specifications.

4. **SCHEDULE OF PRICES**

All blank spaces for Bid prices must be filled in, in ink, with the unit price, or lump sum price, and the total price for each and every item (which prices must be more than $0.00). Bids which do not contain a price for every item listed in the Schedule of Prices for the Contract being bid, will not be considered, unless alternate bids are requested.

5. **INQUIRIES RELATIVE TO INTERPRETATION OF PLANS & SPECIFICATIONS**

Any inquiries by Bidders relative to interpretation of any provisions of any of the Contract Documents will not be answered verbally, and to be given consideration must be submitted in writing to the Illinois Tollway no later than the date shown in the "Advertisement for Sealed Bids" (Page A-1). Answers, if any are given to such inquiries, will be in the form of Addenda and will be furnished to all Bidders in conformance with the Tollway Supplemental Specifications.

6. **BID GUARANTY**

The Bidder is required to furnish a Bid Guaranty in accordance with the provisions of Article 102.09 of the Tollway Supplemental Specifications.

7. **WAGE STIPULATIONS**

This contract calls for the construction of a "public work," within the meaning of the Illinois Prevailing Wage Act, 820 ILCS 130/01 et seq. ("the Act") or is a service contract subject to the prevailing wage requirement of the Illinois Procurement Code, 30 ILCS 500/25-60 (the "Code"). The Act requires contractors and subcontractors to pay laborers, workers and mechanics performing services on public works projects no less than the current "prevailing rate of wages" (hourly cash wages plus amount for fringe benefits) in the county where the work is performed. The Code requires vendors awarded certain service contracts to pay service workers no less than the general prevailing wage rate of hourly wages (hourly cash wages plus amount for fringe benefits in the county where the work is performed. The Illinois Department of Labor publishes the prevailing wage rates on its website https://www.illinois.gov/idol/Laws-Rules/CONMED/Pages/Rates.aspx. The Illinois Department of Labor revises the prevailing wage rates and the contractor/subcontractor has an obligation to check the Illinois Department of Labor's website for revisions to prevailing wage rates. For information regarding current

prevailing wage rates, please refer to the Illinois Department of Labor's website. All contractors and subcontractors rendering services under this contract must comply with all requirements of the Act and Code, including but not limited to all wage requirements and notice and record keeping duties.

The contractor to whom the contract is awarded shall insert into each subcontract and into the project specifications for each subcontract a written stipulation to the effect that not less than the prevailing rate of wages shall be paid to all laborers, workers, and mechanics performing work under the contract. Each subcontractor shall insert into each lower tiered subcontract and into the project specifications for each lower tiered subcontract a stipulation to the effect that not less than the prevailing rate of wages shall be paid to all laborers, workers, and mechanics performing work under the contract.

A list of prevailing wages for the counties in which work under this contract is to be performed is included within this contract as an attachment.

## AMENDMENTS TO PREVAILING WAGE LAW

Effective July 16, 2014, the Prevailing Wage Act has been amended. Below is a summary of some of the important changes that may affect you:

- For each calendar month construction on a Tollway project occurs, a certified payroll must be filed **no later than the 15th** of the following month.
- Payroll records must be kept for 5 years from the date of last payment on a contract or subcontract.
- Any person who willfully files a false payroll is guilty of a Class A misdemeanor.
- Any person who willfully fails to create, keep, maintain, or **produce records as or when** required by the Act is guilty of a Class A misdemeanor.
- Any contractor or subcontractor convicted or found guilty of the above is subject to **automatic and immediate debarment** and prohibited from participating in any public works project for 4 years with no right to a hearing.

The full text of the Prevailing Wage Act can be found here:

http://www.ilga.gov/legislation/ilcs/ilcs3.asp?ActID=2405&ChapterID=68

## 8. NON-COLLUSION AFFIDAVIT

The Bidder must complete and return the Non-Collusion Affidavit furnished with the Solicitation with their bid. In the event said Affidavit is found to be false in any respect, the Illinois Tollway may, at its option, void this Contract without liability on the part of the Illinois Tollway and in addition, the contractor and its surety or sureties shall be liable to the Illinois Tollway for any and all damages of every nature and description sustained, directly or indirectly, by the Illinois Tollway as a result of entering into Contracts based upon, among other things, the execution of such false affidavit.

## 9. QUALIFICATIONS OF BIDDER

The Illinois Tollway follows the procurement rules set by the Illinois Department of Transportation (IDOT) for the procurement of construction and professional services. The Bidder must be prequalified by the Illinois Department of Transportation if required by the solicitation. See Page A-1 to determine if IDOT Prequalification is required.

IDOT Contractor's Financial Statements will be acceptable if not more than 18 months old.

Illinois Department of Human Rights Public Contracts Number: Bidder shall complete and return the IDHR Public Contract Number form in Forms A, Part 2, or in the Illinois Procurement Gateway.

Each Bidder authorizes the Illinois Tollway to obtain and examine any and all financial data and experience information heretofore submitted by the Bidder to any Federal, State or local unit of government without further notice.

The Illinois Tollway will analyze the division of work to verify the weakest joint venture member is capable of performing, and analyze the others to be able to complete the project if the weakest firm defaults.

The individual partners of any joint venture must be jointly and severally liable for the obligations of the joint venture under the contracts.

Only one person will be designated managing partner for the joint venture and will speak for all joint venture partners and act as project manager.

Once the apparent low Bidder is determined, the apparent low Bidder shall submit the forms "Plant and Equipment Questionnaire" and "Current Contractual Obligations", to supplement the information contained in the qualifications questionnaire required in the paragraph above.

The Illinois Procurement Code provides, in part, that no person or business shall bid, offer, make a submission to a vendor portal, or enter into a contract under the Code if the person or business assisted an employee of the State of Illinois, who, by the nature of his or her duties, has the authority to participate personally and substantially in the decision to award a State contract, by reviewing, drafting, directing, or preparing any invitation for bids, a request for proposal, or request for information or provided similar assistance except as part of a publicly issued opportunity to review drafts of all or part of these documents. See certifications section of the Contract for the required certifications prior to entering into a contract with the State of Illinois

## 10. AUTHORITY TO TRANSACT BUSINESS UNDER AN ASSUMED NAME

If the apparent low Bidder is doing business under an assumed name, it shall be required to furnish, once the apparent low Bidder is determined, a certificate of registration and authorization showing that such individual or partnership is registered and authorized to conduct business in Illinois under such assumed name in accordance with Assumed Business Name Act, 805 ILCS 405/1, as amended from time to time.

## 11. SECRETARY OF STATE CERTIFICATE OF GOOD STANDING

A person, other than an individual acting as a sole proprietor, must be a duly constituted legal entity and authorized to transact business or conduct affairs in Illinois prior to execution of the contract. 30 ILCS 500/20-43. The Secretary of State Certification will be verified by the Tollway for the apparent low Bidder.

12. **TAX EXEMPTIONS**

Any material which is to be incorporated in The Work and any equipment required therefore may be consigned to the Illinois State Toll Highway Authority in care of the Contractor. If the shipping papers show clearly that any such material or equipment is so consigned, the shipment may be exempt from the tax on the transportation of property under the provisions of Section 4292, Title 26, U.S.C.A. (1954). All transportation charges shall be paid by the Contractor.

The Illinois Tollway is currently exempted from the payment of Illinois Retailer's Occupational Tax, Use Tax, Service Tax, Municipal Taxes and Federal Excise Tax.

The tax exempt number and form will become a part of the contract with the successful Bidder.

13. **HAUL ROADS**

Attention of the Contractor is directed to the probable use of public roads and streets (State, County and Municipal) for hauling loads in excess of present permitted allowance. It is the responsibility of the Contractor to make proper arrangements with officials having jurisdiction for any use of public roads and streets beyond that permitted by present regulations.

14. **ACKNOWLEDGMENT OF RECEIPT OF ADDENDA**

The Bidder is required to acknowledge receipt of any Addenda issued to the Bidder by inserting the Addendum number and the issuing date in the space provided in the Solicitation.

15. **AUTHORITY POWER AND FUNDS**

The Illinois Tollway has been created and derives its power and authority under and pursuant to "An Act in relation to the construction, operation, regulation and maintenance of a system of toll highways, and to create the Illinois State Toll Highway Authority, and to define its powers and duties, approved August 7, 1967," (Illinois Compiled Statutes, 605 ILCS 10/1 to 605 ILCS 10/35, as amended from time to time, hereinafter called the "Act").

No payment or other obligations under this Contract are or shall ever be construed to be obligations of the State of Illinois.

16. **PAYMENT OF TOLLS**

The Contractor shall be required to pay the full amount of tolls, if any, incurred by it during the duration of the contract. Said tolls will not be refunded by the Illinois Tollway. Furthermore, in the event that a final determination is made by the Tollway that the Contractor has failed to pay any required tolls and associated fines, the Tollway is authorized to take steps necessary to withhold the amounts of unpaid tolls and fines from any payment due the Contractor by the Tollway and/or other State of Illinois office, department, commission, board or agency.

17. **INSURANCE**

The Contractor shall not commence any work under the Contract until all the insurance as specified in Article 107.27 of the Tollway Supplemental Specifications or any special provisions has been provided and approved, and Notice to Proceed is issued to the Contractor.

18. **ILLINOIS HUMAN RIGHTS ACT**

The Contractor is advised that the Illinois State Toll Highway Authority has heretofore by resolution

adopted all of the applicable requirements and provisions of the Illinois Fair Employment Practices Act, now the Illinois Human Rights Act (Illinois Compiled Statutes, 775 ILCS 5/1 -101, *et sequitur*, as amended from time to time) and all of the applicable rules and regulations promulgated thereunder, and that all such applicable requirements, provisions and rules and regulations are deemed to be a part of the Contract and to apply to the Contractor as if fully set out herein.

19. **MULTI-PROJECT LABOR AGREEMENT**

The Multi-Project Labor Agreement is not in effect for this contract.

20. ***RESERVED***

21. **COMPUTER GENERATED PAY ITEM PRICE PAGES FOR BIDS SUBMITTED IN HARD COPY FORMAT**

The schedule of prices for this contract is available for download in spreadsheet format on the Tollway's Online Plan Room hosted by BHFX DIGITAL IMAGING at: www.illinoistollwaybidding.com.

The schedule of prices is published in spreadsheet format only once when the contract is advertised, and is published as a tool to assist Bidders with preparation of their bid. Any revisions to the schedule of prices, including addenda, are the responsibility of the Bidder and must be included in the bid. It is the Bidder's responsibility to provide an accurate bid, which includes verification that the spreadsheet version of the schedule of prices matches the final contract book P-Pages. When submitting a hard copy bid, in the event of a discrepancy between the spreadsheet schedule of prices from the online plan room, and the contract book P-Pages, the contract book P-Pages and Addenda control and take precedence over the spreadsheet schedule of prices.

If you intend to submit a computer generated bid, it must be in a printed form similar to the contract P-Pages and must be legible. See Page I-1, Item 4 for additional pay item pricing requirements.

22. **PUBLISHED PROCUREMENT INFORMATION:**

The State publishes procurement information, including updates on the General Services eProcurement System BidBuy (https://bidbuy.illinois.gov), referred to as "BidBuy". Procurement information may not be available in any other form or location. Bidder is responsible for monitoring BidBuy. The State will not be held responsible if Bidder fails to monitor BidBuy, or to fully complete their vendor registration in BidBuy.

23. **PROTEST REVIEW OFFICE**

Vendors may submit a written protest to the Protest Review Office following the requirements of the IDOT Standard Procurement Rules 44 ILL ADM 6.390 through 6.440. All protests shall be in writing and filed with the CPO within 7 calendar days after the protester knows or should have known of the facts giving rise to the protest. Protests filed after the 7 calendar day period will not be considered. In addition, protests that raise issues of fraud, corruption or illegal acts affecting specifications, special provisions, supplemental specifications and plans must be received by the CPO no later than 14 calendar days before the date set for opening of bids. The Protest Review Office information is as follows:

Chief Procurement Office
Attn: Protest Review Office
401 S. Spring Street
Suite 515 Stratton Office Building
Springfield, IL 62706

Email: eec.legalstaff@illinois.gov

Facsimile: (217) 558-1399
Illinois Relay: (800) 526-0844

24. **SUBSTANCE ABUSE PREVENTION PROGRAM (SAPP) PUBLIC ACT 95-0635**

This Public Act requires that all contractors/subcontractors have a SAPP in place, with certain requirements, **before** starting work. The requirements of this Public Act are material to the contract, and the contractor shall require the same of all approved subcontractors.

25. **STATE BOARD OF ELECTIONS REGISTRATION PUBLIC ACT 95-0971**

State Board of Elections Registration: Vendor or Bidder may be prohibited from making political contributions and be required to register with the State Board of Elections. For more information, see State Board of Elections in Forms A, Part 5.

26. **DEPARTMENT OF HUMAN RIGHTS (DHR) PUBLIC CONTRACT NUMBER**

Any Bidder who bids on public contracts must register with the IDHR to be eligible to be awarded public contracts. Any Bidder who registered previously but has a DHR number of 89999-00-0 or lower must re-register to maintain eligibility. Any IDHR number of 90000-00-0 or higher is valid for five years from the date of issue. The IDHR website link is below.

http://www2.illinois.gov/dhr/PublicContracts/Pages/IDHR_Number.aspx

27. **DISADVANTAGED BUSINESS PARTICIPATION**

See Special Provision for Disadvantaged Business Participation

28. **VOSB/SDVOSB PARTICIPATION**

See Special Provision for VOSB/SDVOSB Participation

29. **EQUAL EMPLOYMENT OPPORTUNITY**

See Special Provision for Equal Employment Opportunity.

30. **BID CREDIT INCENTIVE PROGRAMS**

Tollway Bid Credit Incentive Programs allow contractors or subcontractors/fabricators to earn bid credits to be used toward future Tollway construction bids. A Bidder can then apply its bid credits to a maximum Bid Credit Cap assigned to each construction contract to lower their bid amount and increase the chances of winning the contract as the low Bidder. Use of bid credits from the Bid Credit Incentive Programs is applicable only to construction projects advertised by the Tollway for public bidding.

See Special Provision for Bid Credit Incentive Programs included in Volume 1.

Current Tollway Bid Credit Programs:

- CONSTRUCTIONWORKS PROGRAM

The ConstructionWorks (CW) Program offers contractors and subcontractors/fabricators a chance to earn bid credits toward future Tollway construction bids when they hire workers from a pool of qualified and eligible ConstructionWorks individuals including minorities, women, ex-offenders and exonerated individuals, veterans and other traditionally underserved populations.

See the Operational Guide for ConstructionWorks Program at https://www.illinoistollway.com/doing-

business/diversity-development#BidCreditIncentives

- EARNED CREDIT PROGRAM

The Earned Credit Program (ECP) offers contractors and subcontractors/fabricators a chance to earn bid credits toward future Tollway construction bids when they hire workers from a pool of qualified and eligible Workforce Innovation and Opportunity Act (WIOA) individuals including minorities, women, ex-offenders and exonerated individuals, veterans and other traditionally underserved populations.

See the Operational Guide for Earned Credit Program at https://www.illinoistollway.com/doing-business/construction-engineering#Earned%20Credit%20Program.

- PARTNERING FOR GROWTH - CONSTRUCTION for DISADVANTAGED BUSINESS ENTERPRISE OR VETERAN-OWNED SMALL BUSINESS BID CREDIT INCENTIVE PROGRAM

A firm performing as a mentor in an approved Partnering for Growth (P4G) – Construction relationship, providing assistance to and training of a DBE or Veteran firm can earn Bid Credits that may be used toward future Tollway construction bids.

> See the Operational Guide for Partnering For Growth - Construction For Disadvantaged Business Enterprise Bid Credit Incentive Program and the Operational Guide For Partnering For Growth – Construction For Veteran-owned Small Business Bid Credit Incentive Program at https://www.illinoistollway.com/doing-business/diversity-development/programs#Mentor

## 31. REPORTING OF COMMUNICATIONS WITH VENDORS

Please note that written or oral communications received by the Tollway that imparts or requests material information or makes a material argument regarding potential action concerning this procurement may require reporting to the Procurement Policy Board as required by the Procurement Code. When an oral communication is made by a person required to register under the Lobbyist Registration Act (25 ILCS 170) and received by a State employee, all individuals who initiate or participate in the communication shall submit a written report to that State employee memorializing the communication and for reporting to the Procurement Policy Board. This provision is not intended to prohibit communications with State employees regarding procurement matter, but rather only requires reporting of those communications when they occur.

## 32. INITIAL CONTACT INFORMATION

The Initial Contact Person named on Page A-1 shall be familiar with assembling or obtaining the duly executed documents constituting the contract between the Illinois Tollway and the contractor.

## 33. WEB-BASED PROJECT MANAGEMENT

The Illinois Tollway will manage this project using the Tollway's web-based project management system. The primary goal of using the web-based project management system is to create a complete project record and serve as a project archive.

Once the apparent low Bidder is determined, all project correspondence occurring with the apparent low Bidder will be addressed to the Initial Contact person via e-mail from Contract Services and via the web-

based project management system. Initial correspondence is expected to consist of requests for information and responses related to DBE and subcontractor related items.

## 34. SUBCONTRACTOR DISCLOSURE

The Bidder must identify, to the extent the information is known, the names, addresses and type of work for all sub-contractors that will be utilized in the performance of this Contract together with the anticipated contract value each sub-contractor is expected to receive pursuant to this Contract. The State may request updated information at any time. For purposes of this section, sub-contractor means a person or entity that enters into a contractual agreement with a person or entity who has a contract with the Illinois Tollway pursuant to which the person or entity provides some or all of the goods, services, real property, remuneration, or other monetary forms of consideration that are the subject of the primary Illinois Tollway contract. A person or entity is not a sub-contractor if that person only provides goods or supplies that are incidental to the performance of a contract by a person who holds the contract with the Illinois Tollway. In no event shall a sub-contractor be allowed to start work prior to approval by the Tollway.

## 35. PROCUREMENT COMPLIANCE MONITORS

Under Public Acts 96-0795, 96-0920 and 97-0895, Agency Procurement Compliance Monitors may review contract documents and any files or records related to procurements, and will report to the Chief Procurement Officer on procurement issues that may require action, and to further report on corrective action not taken by state personnel. Additionally, the Procurement Compliance Monitors may monitor the procurement process for appropriate actions and transparency.

## 36. PUBLICITY

Contractor shall not, in any advertisement, including but not limited to Contractor's website or any other type of solicitation for business, state, indicate or otherwise imply that it has been endorsed by or is currently or has previously been under contract with the Illinois Tollway nor shall the Illinois Tollway's name be used in any such advertisement or solicitation without the prior written approval of the Illinois Tollway.

## 37. RESPONSIBLE BIDDER AFFIDAVIT

Public Act 97-0369 amended the Illinois Procurement Code to require a "responsible Bidder" to submit a signed affidavit stating that the Bidder shall maintain an Illinois office as the primary place of employment for persons employed in the construction authorized by the contract. Therefore, in accordance with the Act the Illinois Tollway will request the "Responsible Bidder Affidavit" from the apparent low Bidder, once the apparent low Bidder has been determined.

## 38. REPORT OF A CHANGE IN CIRCUMSTANCES

The Contractor agrees to report to the Tollway as soon as practically possible, but no later than 21 days following any change in facts or circumstances that might impact the Contractor's ability to satisfy its legal or contractual responsibilities and obligations under this contract. Required reports include, but are not limited to changes in the Contractor's Certification/Disclosure Forms, the Contractor's IDOT pre-qualification status, or certification or licensing required for this project. Additionally, the Contractor agrees to report to the Tollway within the above timeframe any arrests, indictments, convictions or other

matters involving the Contractor, or any of its principals, that might occur while this contract is in effect. The reporting requirement does not apply to common offenses, including but not limited to minor/traffic offenses.

Further, the Contractor agrees to incorporate substantially similar reporting requirements into the terms of any and all subcontractors relating to work performed under this agreement. The Contractor agrees to forward or relay to the Tollway any reports received from subcontractors pursuant to this paragraph within 21 days.

Finally, the Contractor acknowledges and agrees that the failure of the Contractor to comply with this reporting requirement shall constitute a material breach of contract which may result in this contract being declared void.

39. **RECORD RETENTION AND AUDIT**

The CONTRACTOR shall maintain in the State of Illinois, for a minimum of five years from the latter of the date of completion of the CONTRACT or the date of final payment under the CONTRACT, adequate books, records, and supporting documents from an accounting system maintained in accordance with generally accepted accounting principles to verify the amounts, recipients, uses and methods of all disbursements of funds passing in conjunction with the CONTRACT. The five year record maintenance period shall be extended for the duration of any audit in progress at the time of that period's expiration. The CONTRACTOR shall at its own expense make such records available in a timely manner for inspection and audit (including copies and extracts of records) as required by the Auditor General and other State Auditors, Chief Procurement Officer, the Illinois Department of Transportation, and the TOLLWAY's Inspector General, Internal Audit or other TOLLWAY agents at all reasonable times and without prior notice.

The obligations of this Section shall be explicitly included in any subcontracts or agreements formed between the CONTRACTOR and any subcontractors or suppliers of goods and services to the extent that those subcontracts or agreements relate to fulfillment of the CONTRACTOR's obligations to the TOLLWAY. Such subcontractor shall be required to comply with the terms and conditions of this Section and the TOLLWAY shall be entitled to enforce a breach of that contract.

Any audit adjustment will be submitted on a final invoice for any underpayment or overpayment to the CONTRACTOR or its subcontractors. The CONTRACTOR shall promptly reimburse the TOLLWAY for any overpayment, or the TOLLWAY at its option may deduct any overpayment from any funds due the CONTRACTOR, whether those funds are due under this contract or other contracts to which the CONTRACTOR is a party either directly with the TOLLWAY or as a subcontractor. In the event the CONTRACTOR fails or refuses to reimburse the TOLLWAY for an overpayment, the CONTRACTOR shall be responsible for all costs, including attorney fees, incurred by the TOLLWAY to collect such overpayment.

Failure to maintain or make available the books, records, and supporting documents required by this Section shall establish a presumption in favor of the TOLLWAY for recovery of any funds paid by the TOLLWAY under the contract for which adequate books, records and supporting documentation are not available to support their purported disbursement.

The CONTRACTOR shall reimburse the TOLLWAY for the total costs of an audit that identifies significant

findings that would benefit the TOLLWAY, including but not limited to reasonable attorney's fees and other expenses. Significant findings for the purposes of this provision shall be identified as an amount in excess of $50,000 in aggregate of the audit report or findings of material performance or compliance deficiencies.

If the CONTRACTOR fails to comply with these requirements, the CONTRACTOR may be disqualified or suspended from bidding on or working on future contracts.

## 40. INSPECTOR GENERAL

The Vendor/Contractor hereby acknowledges that pursuant to Section 8.5 of the Toll Highway Act (605 ILCS 10/8.5) the Inspector General of the Illinois State Toll Highway Authority has the authority to conduct investigations into certain matters including but not limited to allegations of fraud, waste and abuse, and to conduct reviews. The Vendor/Contractor shall fully cooperate in any OIG investigation or review. Cooperation includes providing access to all information and documentation related to the goods/services described in this Agreement, and disclosing and making available all personnel involved or connected with these goods/services or having knowledge of these goods/services. All subcontracts must inform Subcontractors of this provision and their duty to comply.

## 41. ACCEPTANCE OF SCANNED SIGNATURES

Unless otherwise specified, the parties agree that bids, contracts, certifications and disclosures, and other contract related documents to be entered into in connection with the resulting contract will be considered signed when the signature of a party is delivered by scanned image (e.g. .pdf or .tiff file extension name) as an attachment to electronic mail (email). Such scanned signature will be treated in all respects as having the same effect as an original wet ink signature.

## 42. EXPATRIATED ENTITIES

Except in limited circumstances, no business or member of a unitary business group, as defined in the Illinois Income Tax Act, shall submit a bid for or enter into a contract with a State agency if that business or any member of the unitary business group is an expatriated entity.

# PART II: Bid Requirements

| | |
|---|---|
| **Bid** | Return with Bid |
| **Bid Listing All Addenda** | Return with Bid |
| **Bid Bond** | Return with Bid |
| **Forms A or Forms B Disclosures** | Return with Bid |
| **Disadvantaged Business Enterprise DBE 2026 and DBE 2023 (if required)**<br>(Additional details including form DBE 2025(s) will be requested from the apparent low Bidder.) | Return with Bid |
| **Veteran Small Business Participation VOSB 2026 and VOSB 2023 (if required)**<br>(Additional details including form VOSB 2025(s) will be requested from the apparent low Bidder.) | Return with Bid |
| **Equal Employment Opportunity Program** | Will be Requested from the Apparent Low Bidder |
| **Bid Credit Program, if applicable** | Return with Bid |
| **I.D.O.T. Certificate of Eligibility (if required)** | Return with Bid |
| **Affidavit** | Return with Bid |
| **Responsible Bidder Affidavit** | Will be Requested from the Apparent Low Bidder |
| **Bidder Preferences** | Return with Bid |
| **Bidder List of Individual Contacts** | Return with Bid |
| **Plant and Equipment Questionnaire** | Will be Requested from the Apparent Low Bidder |
| **Illinois Tollway Standard Terms and Conditions** | Return with Bid |
| **Secretary of State Certificate of Good Standing** | Will be Verified by the Tollway |
| **State Board of Elections** | Will be verified by the Tollway |
| **Illinois Department of Human Rights** | Will be verified by the Tollway |

**Prevailing Wage rates for Cook County effective Sept. 1, 2017**

| Trade Title | Region | Type | Class | Base Wage | Fore-man Wage | M-F OT | OSA | OSH | H/W | Pension | Vacation | Training |
|---|---|---|---|---|---|---|---|---|---|---|---|---|
| ASBESTOS ABT-GEN | ALL | ALL | | 41.20 | 42.20 | 1.5 | 1.5 | 2 | 14.65 | 12.32 | 0.00 | 0.50 |
| ASBESTOS ABT-MEC | ALL | BLD | | 37.46 | 39.96 | 1.5 | 1.5 | 2 | 11.62 | 11.06 | 0.00 | 0.72 |
| BOILERMAKER | ALL | BLD | | 48.49 | 52.86 | 2 | 2 | 2 | 6.97 | 19.61 | 0.00 | 0.90 |
| BRICK MASON | ALL | BLD | | 45.38 | 49.92 | 1.5 | 1.5 | 2 | 10.45 | 16.68 | 0.00 | 0.90 |
| CARPENTER | ALL | ALL | | 46.35 | 48.35 | 1.5 | 1.5 | 2 | 11.79 | 18.87 | 0.00 | 0.63 |
| CEMENT MASON | ALL | ALL | | 44.25 | 46.25 | 2 | 1.5 | 2 | 14.00 | 17.16 | 0.00 | 0.92 |
| CERAMIC TILE FNSHER | ALL | BLD | | 38.56 | 38.56 | 1.5 | 1.5 | 2 | 10.65 | 11.18 | 0.00 | 0.68 |
| COMM. ELECT. | ALL | BLD | | 43.10 | 45.90 | 1.5 | 1.5 | 2 | 8.88 | 13.22 | 1.00 | 0.85 |
| ELECTRIC PWR EQMT OP | ALL | ALL | | 50.50 | 55.50 | 1.5 | 1.5 | 2 | 11.69 | 16.69 | 0.00 | 3.12 |
| ELECTRIC PWR GRNDMAN | ALL | ALL | | 39.39 | 55.50 | 1.5 | 1.5 | 2 | 9.12 | 13.02 | 0.00 | 2.43 |
| ELECTRIC PWR LINEMAN | ALL | ALL | | 50.50 | 55.50 | 1.5 | 1.5 | 2 | 11.69 | 16.69 | 0.00 | 3.12 |
| ELECTRICIAN | ALL | ALL | | 47.40 | 50.40 | 1.5 | 1.5 | 2 | 14.33 | 16.10 | 1.00 | 1.18 |
| ELEVATOR CONSTRUCTOR | ALL | BLD | | 51.94 | 58.43 | 2 | 2 | 2 | 14.43 | 14.96 | 4.16 | 0.90 |
| FENCE ERECTOR | ALL | ALL | | 39.58 | 41.58 | 1.5 | 1.5 | 2 | 13.40 | 13.90 | 0.00 | 0.40 |
| GLAZIER | ALL | BLD | | 42.45 | 43.95 | 1.5 | 1.5 | 2 | 14.04 | 20.14 | 0.00 | 0.94 |
| HT/FROST INSULATOR | ALL | BLD | | 50.50 | 53.00 | 1.5 | 1.5 | 2 | 12.12 | 12.96 | 0.00 | 0.72 |
| IRON WORKER | ALL | ALL | | 47.33 | 49.33 | 2 | 2 | 2 | 14.15 | 22.39 | 0.00 | 0.35 |
| LABORER | ALL | ALL | | 41.20 | 41.95 | 1.5 | 1.5 | 2 | 14.65 | 12.32 | 0.00 | 0.50 |
| LATHER | ALL | ALL | | 46.35 | 48.35 | 1.5 | 1.5 | 2 | 11.79 | 18.87 | 0.00 | 0.63 |
| MACHINIST | ALL | BLD | | 47.56 | 50.06 | 1.5 | 1.5 | 2 | 7.05 | 8.95 | 1.85 | 1.47 |
| MARBLE FINISHERS | ALL | ALL | | 33.95 | 33.95 | 1.5 | 1.5 | 2 | 10.45 | 15.52 | 0.00 | 0.47 |
| MARBLE MASON | ALL | BLD | | 44.63 | 49.09 | 1.5 | 1.5 | 2 | 10.45 | 16.28 | 0.00 | 0.59 |
| MATERIAL TESTER I | ALL | ALL | | 31.20 | 31.20 | 1.5 | 1.5 | 2 | 14.65 | 12.32 | 0.00 | 0.50 |
| MATERIALS TESTER II | ALL | ALL | | 36.20 | 36.20 | 1.5 | 1.5 | 2 | 14.65 | 12.32 | 0.00 | 0.50 |
| MILLWRIGHT | ALL | ALL | | 46.35 | 48.35 | 1.5 | 1.5 | 2 | 11.79 | 18.87 | 0.00 | 0.63 |

| | | | | | | | | | | | | |
|---|---|---|---|---|---|---|---|---|---|---|---|---|
| OPERATING ENGINEER | ALL | BLD | 1 | 50.10 | 54.10 | 2 | 2 | 2 | 18.80 | 14.35 | 2.00 | 1.30 |
| OPERATING ENGINEER | ALL | BLD | 2 | 48.80 | 54.10 | 2 | 2 | 2 | 18.80 | 14.35 | 2.00 | 1.30 |
| OPERATING ENGINEER | ALL | BLD | 3 | 46.25 | 54.10 | 2 | 2 | 2 | 18.80 | 14.35 | 2.00 | 1.30 |
| OPERATING ENGINEER | ALL | BLD | 4 | 44.50 | 54.10 | 2 | 2 | 2 | 18.80 | 14.35 | 2.00 | 1.30 |
| OPERATING ENGINEER | ALL | BLD | 5 | 53.85 | 54.10 | 2 | 2 | 2 | 18.80 | 14.35 | 2.00 | 1.30 |
| OPERATING ENGINEER | ALL | BLD | 6 | 51.10 | 54.10 | 2 | 2 | 2 | 18.80 | 14.35 | 2.00 | 1.30 |
| OPERATING ENGINEER | ALL | BLD | 7 | 53.10 | 54.10 | 2 | 2 | 2 | 18.80 | 14.35 | 2.00 | 1.30 |
| OPERATING ENGINEER | ALL | FLT | 1 | 55.90 | 55.90 | 1.5 | 1.5 | 2 | 18.05 | 13.60 | 1.90 | 1.30 |
| OPERATING ENGINEER | ALL | FLT | 2 | 54.40 | 55.90 | 1.5 | 1.5 | 2 | 18.05 | 13.60 | 1.90 | 1.30 |
| OPERATING ENGINEER | ALL | FLT | 3 | 48.40 | 55.90 | 1.5 | 1.5 | 2 | 18.05 | 13.60 | 1.90 | 1.30 |
| OPERATING ENGINEER | ALL | FLT | 4 | 40.25 | 55.90 | 1.5 | 1.5 | 2 | 18.05 | 13.60 | 1.90 | 1.30 |
| OPERATING ENGINEER | ALL | FLT | 5 | 57.40 | 55.90 | 1.5 | 1.5 | 2 | 18.05 | 13.60 | 1.90 | 1.30 |
| OPERATING ENGINEER | ALL | FLT | 6 | 38.00 | 55.90 | 1.5 | 1.5 | 2 | 18.05 | 13.60 | 1.90 | 1.30 |
| OPERATING ENGINEER | ALL | HWY | 1 | 48.30 | 52.30 | 1.5 | 1.5 | 2 | 18.80 | 14.35 | 2.00 | 1.30 |
| OPERATING ENGINEER | ALL | HWY | 2 | 47.75 | 52.30 | 1.5 | 1.5 | 2 | 18.80 | 14.35 | 2.00 | 1.30 |
| OPERATING ENGINEER | ALL | HWY | 3 | 45.70 | 52.30 | 1.5 | 1.5 | 2 | 18.80 | 14.35 | 2.00 | 1.30 |
| OPERATING ENGINEER | ALL | HWY | 4 | 44.30 | 52.30 | 1.5 | 1.5 | 2 | 18.80 | 14.35 | 2.00 | 1.30 |
| OPERATING ENGINEER | ALL | HWY | 5 | 43.10 | 52.30 | 1.5 | 1.5 | 2 | 18.80 | 14.35 | 2.00 | 1.30 |
| OPERATING ENGINEER | ALL | HWY | 6 | 51.30 | 52.30 | 1.5 | 1.5 | 2 | 18.80 | 14.35 | 2.00 | 1.30 |
| OPERATING ENGINEER | ALL | HWY | 7 | 49.30 | 52.30 | 1.5 | 1.5 | 2 | 18.80 | 14.35 | 2.00 | 1.30 |
| ORNAMNTL IRON WORKER | ALL | ALL | | 46.75 | 49.25 | 2 | 2 | 2 | 13.90 | 19.79 | 0.00 | 0.75 |
| PAINTER | ALL | ALL | | 45.55 | 51.24 | 1.5 | 1.5 | 1.5 | 11.56 | 11.44 | 0.00 | 1.87 |
| PAINTER SIGNS | ALL | BLD | | 37.45 | 42.05 | 1.5 | 1.5 | 2 | 2.60 | 3.18 | 0.00 | 0.00 |
| PILEDRIVER | ALL | ALL | | 46.35 | 48.35 | 1.5 | 1.5 | 2 | 11.79 | 18.87 | 0.00 | 0.63 |
| PIPEFITTER | ALL | BLD | | 47.50 | 50.50 | 1.5 | 1.5 | 2 | 10.05 | 17.85 | 0.00 | 2.12 |
| PLASTERER | ALL | BLD | | 42.75 | 45.31 | 1.5 | 1.5 | 2 | 14.00 | 15.71 | 0.00 | 0.89 |
| PLUMBER | ALL | BLD | | 49.25 | 52.20 | 1.5 | 1.5 | 2 | 14.34 | 13.35 | 0.00 | 1.28 |
| ROOFER | ALL | BLD | | 42.30 | 45.30 | 1.5 | 1.5 | 2 | 9.08 | 12.14 | 0.00 | 0.58 |
| SHEETMETAL WORKER | ALL | BLD | | 43.50 | 46.98 | 1.5 | 1.5 | 2 | 11.03 | 23.43 | 0.00 | 0.78 |
| SIGN HANGER | ALL | BLD | | 31.31 | 33.81 | 1.5 | 1.5 | 2 | 4.85 | 3.28 | 0.00 | 0.00 |

| | | | | | | | | | | | | |
|---|---|---|---|---|---|---|---|---|---|---|---|---|
| SPRINKLER FITTER | ALL | BLD | | 47.20 | 49.20 | 1.5 | 1.5 | 2 | 12.25 | 11.55 | 0.00 | 0.55 |
| STEEL ERECTOR | ALL | ALL | | 42.07 | 44.07 | 2 | 2 | 2 | 13.45 | 19.59 | 0.00 | 0.35 |
| STONE MASON | ALL | BLD | | 45.38 | 49.92 | 1.5 | 1.5 | 2 | 10.45 | 16.68 | 0.00 | 0.90 |
| TERRAZZO FINISHER | ALL | BLD | | 40.54 | 40.54 | 1.5 | 1.5 | 2 | 10.65 | 12.76 | 0.00 | 0.73 |
| TERRAZZO MASON | ALL | BLD | | 44.38 | 47.88 | 1.5 | 1.5 | 2 | 10.65 | 14.15 | 0.00 | 0.82 |
| TILE MASON | ALL | BLD | | 45.49 | 49.49 | 1.5 | 1.5 | 2 | 10.65 | 13.88 | 0.00 | 0.86 |
| TRAFFIC SAFETY WRKR | ALL | HWY | | 33.50 | 35.85 | 1.5 | 1.5 | 2 | 6.00 | 7.25 | 0.00 | 0.50 |
| TRUCK DRIVER | E | ALL | 1 | 35.60 | 36.25 | 1.5 | 1.5 | 2 | 8.56 | 11.50 | 0.00 | 0.15 |
| TRUCK DRIVER | E | ALL | 2 | 35.85 | 36.25 | 1.5 | 1.5 | 2 | 8.56 | 11.50 | 0.00 | 0.15 |
| TRUCK DRIVER | E | ALL | 3 | 36.05 | 36.25 | 1.5 | 1.5 | 2 | 8.56 | 11.50 | 0.00 | 0.15 |
| TRUCK DRIVER | E | ALL | 4 | 36.25 | 36.25 | 1.5 | 1.5 | 2 | 8.56 | 11.50 | 0.00 | 0.15 |
| TRUCK DRIVER | W | ALL | 1 | 35.98 | 36.53 | 1.5 | 1.5 | 2 | 8.25 | 10.14 | 0.00 | 0.15 |
| TRUCK DRIVER | W | ALL | 2 | 36.13 | 36.53 | 1.5 | 1.5 | 2 | 8.25 | 10.14 | 0.00 | 0.15 |
| TRUCK DRIVER | W | ALL | 3 | 36.33 | 36.53 | 1.5 | 1.5 | 2 | 8.25 | 10.14 | 0.00 | 0.15 |
| TRUCK DRIVER | W | ALL | 4 | 36.53 | 36.53 | 1.5 | 1.5 | 2 | 8.25 | 10.14 | 0.00 | 0.15 |
| TUCKPOINTER | ALL | BLD | | 45.42 | 46.42 | 1.5 | 1.5 | 2 | 8.32 | 15.42 | 0.00 | 0.80 |

**Legend**

**M-F OT** Unless otherwise noted, OT pay is required for any hour greater than 8 worked each day, Mon through Fri. The number listed is the multiple of the base wage.

**OSA** Overtime pay required for every hour worked on Saturdays

**OSH** Overtime pay required for every hour worked on Sundays and Holidays

**H/W** Health/Welfare benefit

Explanations COOK COUNTY

The following list is considered as those days for which holiday rates of wages for work performed apply: New Years Day, Memorial Day, Fourth of July, Labor Day, Thanksgiving Day, Christmas Day and Veterans Day in some classifications/counties. Generally, any of these holidays which fall on a Sunday is celebrated on the following Monday. This then makes work performed on that Monday payable at the appropriate overtime rate for holiday pay. Common practice in a given local may alter certain days of celebration. If in doubt, please check with IDOL.

TRUCK DRIVERS (WEST) - That part of the county West of Barrington Road.

EXPLANATION OF CLASSES

ASBESTOS - GENERAL - removal of asbestos material/mold and hazardous materials from any place in a building, including mechanical systems where those mechanical systems are to be removed. This includes the removal of asbestos materials/mold and hazardous materials from ductwork or pipes in a building when the building is to be demolished at the time or at some close future date. ASBESTOS - MECHANICAL - removal of asbestos material from mechanical systems, such as pipes, ducts, and boilers, where the mechanical systems are to remain.

CERAMIC TILE FINISHER

The grouting, cleaning, and polishing of all classes of tile, whether for interior or exterior purposes, all burned, glazed or unglazed products; all composition materials, granite tiles, warning detectable tiles, cement tiles, epoxy composite materials, pavers, glass, mosaics, fiberglass, and all substitute materials, for tile made in tile-like units; all mixtures in tile like form of cement, metals, and other materials that are for and intended for use as a finished floor surface, stair treads, promenade roofs, walks, walls, ceilings, swimming pools, and all other places where tile is to form a finished interior or exterior. The mixing of all setting mortars including but not limited to thin-set mortars, epoxies, wall mud, and any other sand and cement mixtures or adhesives when used in the preparation, installation, repair, or maintenance of tile and/or similar materials. The handling and unloading of all sand, cement, lime, tile, fixtures, equipment, adhesives, or any other materials to be used in the preparation, installation, repair, or maintenance of tile and/or similar materials. Ceramic Tile Finishers shall fill all joints and voids regardless of method on all tile work, particularly and especially after installation of said tile work. Application of any and all protective coverings to all types of tile installations including, but not be limited to, all soap compounds, paper products, tapes, and all polyethylene coverings, plywood, masonite, cardboard, and any new type of products that may be used to protect tile installations, Blastrac equipment, and all floor scarifying equipment used in preparing floors to receive tile. The clean up and removal of all waste and materials. All demolition of existing tile floors and walls to be re-tiled.

COMMUNICATIONS ELECTRICIAN

Installation, operation, inspection, maintenance, repair and service of radio, television, recording, voice sound vision production and reproduction, telephone and telephone interconnect, facsimile, data apparatus, coaxial, fibre optic and wireless equipment, appliances and systems used for the transmission and reception of signals of any nature, business, domestic, commercial, education, entertainment, and residential purposes, including but not limited to, communication and telephone, electronic and sound equipment, fibre optic and data communication systems, and the performance of any task directly related to such installation or service whether at new or existing sites, such tasks to include the placing of wire and cable and electrical power conduit or other raceway work within the equipment room and pulling wire and/or cable through conduit and the installation of any incidental conduit, such that the employees covered hereby can complete any job in full.

MARBLE FINISHER

Loading and unloading trucks, distribution of all materials (all stone, sand, etc.), stocking of floors with material, performing all rigging for heavy work, the handling of all material that may be needed for the installation of such materials, building of scaffolding, polishing if needed, patching, waxing of material if damaged, pointing up, caulking, grouting and cleaning of marble, holding water on diamond or Carborundum blade or saw for setters cutting, use of tub saw or any other saw needed for preparation of material, drilling of holes for wires that anchor material set by setters, mixing up of molding plaster for installation of material, mixing up thin set for the installation of material, mixing up of sand to cement for the installation of material and such other work as may be required in helping a Marble Setter in the handling of all material in the erection or installation of interior marble, slate, travertine, art marble, serpentine, alberene stone, blue stone, granite and other stones (meaning as to stone any foreign or domestic materials as are specified and used in building interiors and exteriors and customarily known as stone in the trade), carrara, sanionyx, vitrolite and similar opaque glass and the laying of all marble tile, terrazzo tile, slate tile and precast tile, steps, risers treads, base, or any other materials that may be used as substitutes for any of the aforementioned materials and which are used on interior and exterior which are installed in a similar manner.

MATERIAL TESTER I: Hand coring and drilling for testing of materials; field inspection of uncured concrete and asphalt.

MATERIAL TESTER II: Field inspection of welds, structural steel, fireproofing, masonry, soil, facade, reinforcing steel, formwork, cured concrete, and concrete and asphalt batch plants; adjusting proportions of bituminous mixtures.

OPERATING ENGINEER - BUILDING

Class 1. Asphalt Plant; Asphalt Spreader; Autograde; Backhoes with Caisson Attachment; Batch Plant; Benoto (requires Two Engineers); Boiler and Throttle Valve; Caisson Rigs; Central Redi-Mix Plant; Combination Back Hoe Front End-loader Machine; Compressor and Throttle Valve; Concrete Breaker (Truck Mounted); Concrete Conveyor; Concrete Conveyor (Truck Mounted); Concrete Paver Over 27E cu. ft; Concrete Paver 27E cu. ft. and Under: Concrete Placer; Concrete Placing Boom; Concrete Pump (Truck Mounted); Concrete Tower; Cranes, All; Cranes, Hammerhead; Cranes, (GCI and similar Type); Creter Crane; Spider Crane; Crusher, Stone, etc.; Derricks, All; Derricks, Traveling; Formless Curb and Gutter Machine; Grader, Elevating; Grouting Machines; Heavy Duty Self-Propelled Transporter or Prime Mover; Highlift Shovels or Front Endloader 2-1/4 yd. and over; Hoists, Elevators, outside type rack and pinion and similar machines; Hoists, One, Two and Three Drum; Hoists, Two Tugger One Floor; Hydraulic Backhoes; Hydraulic Boom Trucks; Hydro Vac (and similar equipment); Locomotives, All; Motor Patrol; Lubrication Technician; Manipulators; Pile Drivers and Skid Rig; Post Hole Digger; Pre-Stress Machine; Pump Cretes Dual Ram; Pump Cretes: Squeeze Cretes-Screw Type Pumps; Gypsum Bulker and Pump; Raised and Blind Hole Drill; Roto Mill Grinder; Scoops - Tractor Drawn; Slip-Form Paver; Straddle Buggies; Operation of Tie Back Machine; Tournapull; Tractor with Boom and Side Boom; Trenching Machines.

Class 2. Boilers; Broom, All Power Propelled; Bulldozers; Concrete Mixer (Two Bag and Over); Conveyor, Portable; Forklift Trucks; Highlift Shovels or Front Endloaders under 2-1/4 yd.; Hoists, Automatic; Hoists, Inside Elevators; Hoists, Sewer Dragging Machine; Hoists, Tugger Single Drum;

Laser Screed; Rock Drill (Self-Propelled); Rock Drill (Truck Mounted); Rollers, All; Steam Generators; Tractors, All; Tractor Drawn Vibratory Roller; Winch Trucks with "A" Frame.

Class 3. Air Compressor; Combination Small Equipment Operator; Generators; Heaters, Mechanical; Hoists, Inside Elevators (remodeling or renovation work); Hydraulic Power Units (Pile Driving, Extracting, and Drilling); Pumps, over 3" (1 to 3 not to exceed a total of 300 ft.); Low Boys; Pumps, Well Points; Welding Machines (2 through 5); Winches, 4 Small Electric Drill Winches.

Class 4. Bobcats and/or other Skid Steer Loaders; Oilers; and Brick Forklift.

Class 5. Assistant Craft Foreman.

Class 6. Gradall.

Class 7. Mechanics; Welders.

OPERATING ENGINEERS - HIGHWAY CONSTRUCTION

Class 1. Asphalt Plant; Asphalt Heater and Planer Combination; Asphalt Heater Scarfire; Asphalt Spreader; Autograder/GOMACO or other similar type machines: ABG Paver; Backhoes with Caisson Attachment; Ballast Regulator; Belt Loader; Caisson Rigs; Car Dumper; Central Redi-Mix Plant; Combination Backhoe Front Endloader Machine, (1 cu. yd. Backhoe Bucket or over or with attachments); Concrete Breaker (Truck Mounted); Concrete Conveyor; Concrete Paver over 27E cu. ft.; Concrete Placer; Concrete Tube Float; Cranes, all attachments; Cranes, Tower Cranes of all types: Creter Crane: Spider Crane; Crusher, Stone, etc.; Derricks, All; Derrick Boats; Derricks, Traveling; Dredges; Elevators, Outside type Rack & Pinion and Similar Machines; Formless Curb and Gutter Machine; Grader, Elevating; Grader, Motor Grader, Motor Patrol, Auto Patrol, Form Grader, Pull Grader, Subgrader; Guard Rail Post Driver Truck Mounted; Hoists, One, Two and Three Drum; Heavy Duty Self-Propelled Transporter or Prime Mover; Hydraulic Backhoes; Backhoes with shear attachments up to 40' of boom reach; Lubrication Technician; Manipulators; Mucking Machine; Pile Drivers and Skid Rig; Pre-Stress Machine; Pump Cretes Dual Ram; Rock Drill - Crawler or Skid Rig; Rock Drill - Truck Mounted; Rock/Track Tamper; Roto Mill Grinder; Slip-Form Paver; Snow Melters; Soil Test Drill Rig (Truck Mounted); Straddle Buggies; Hydraulic Telescoping Form (Tunnel); Operation of Tieback Machine; Tractor Drawn Belt Loader; Tractor Drawn Belt Loader (with attached pusher - two engineers); Tractor with Boom; Tractaire with Attachments; Traffic Barrier Transfer Machine; Trenching; Truck Mounted Concrete Pump with Boom; Raised or Blind Hole Drills (Tunnel Shaft); Underground Boring and/or Mining Machines 5 ft. in diameter and over tunnel, etc; Underground Boring and/or Mining Machines under 5 ft. in diameter; Wheel Excavator; Widener (APSCO).

Class 2. Batch Plant; Bituminous Mixer; Boiler and Throttle Valve; Bulldozers; Car Loader Trailing Conveyors; Combination Backhoe Front Endloader Machine (Less than 1 cu. yd. Backhoe Bucket or over or with attachments); Compressor and Throttle Valve; Compressor, Common Receiver (3); Concrete Breaker or Hydro Hammer; Concrete Grinding Machine; Concrete Mixer or Paver 7S Series to and including 27 cu. ft.;

Concrete Spreader; Concrete Curing Machine, Burlap Machine, Belting Machine and Sealing Machine; Concrete Wheel Saw; Conveyor Muck Cars (Haglund or Similar Type); Drills, All; Finishing Machine - Concrete; Highlift Shovels or Front Endloader; Hoist - Sewer Dragging Machine; Hydraulic Boom Trucks (All Attachments); Hydro-Blaster; Hydro Excavating (excluding hose work); Laser Screed; All Locomotives, Dinky; Off-Road Hauling Units (including articulating) Non Self-Loading Ejection Dump; Pump Cretes: Squeeze Cretes - Screw Type Pumps, Gypsum Bulker and Pump; Roller, Asphalt; Rotary Snow Plows; Rototiller, Seaman, etc., self-propelled; Self-Propelled Compactor; Spreader - Chip - Stone, etc.; Scraper - Single/Twin Engine/Push and Pull; Scraper - Prime Mover in Tandem (Regardless of Size); Tractors pulling attachments, Sheeps Foot, Disc, Compactor, etc.; Tug Boats.

Class 3. Boilers; Brooms, All Power Propelled; Cement Supply Tender; Compressor, Common Receiver (2); Concrete Mixer (Two Bag and Over); Conveyor, Portable; Farm-Type Tractors Used for Mowing, Seeding, etc.; Forklift Trucks; Grouting Machine; Hoists, Automatic; Hoists, All Elevators; Hoists, Tugger Single Drum; Jeep Diggers; Low Boys; Pipe Jacking Machines; Post-Hole Digger; Power Saw, Concrete Power Driven; Pug Mills; Rollers, other than Asphalt; Seed and Straw Blower; Steam Generators; Stump Machine; Winch Trucks with "A" Frame; Work Boats; Tamper-Form-Motor Driven.

Class 4. Air Compressor; Combination - Small Equipment Operator; Directional Boring Machine; Generators; Heaters, Mechanical; Hydraulic Power Unit (Pile Driving, Extracting, or Drilling); Light Plants, All (1 through 5); Pumps, over 3" (1 to 3 not to exceed a total of 300 ft.); Pumps, Well Points; Vacuum Trucks (excluding hose work); Welding Machines (2 through 5); Winches, 4 Small Electric Drill Winches.

Class 5. SkidSteer Loader (all); Brick Forklifts; Oilers.

Class 6. Field Mechanics and Field Welders

Class 7. Dowell Machine with Air Compressor; Gradall and machines of like nature.

OPERATING ENGINEER - FLOATING

Class 1. Craft Foreman; Master Mechanic; Diver/Wet Tender; Engineer; Engineer (Hydraulic Dredge).

Class 2. Crane/Backhoe Operator; Boat Operator with towing endorsement; Mechanic/Welder; Assistant Engineer (Hydraulic Dredge); Leverman (Hydraulic Dredge); Diver Tender.

Class 3. Deck Equipment Operator, Machineryman, Maintenance of Crane (over 50 ton capacity) or Backhoe (115,000 lbs. or more); Tug/Launch Operator; Loader/Dozer and like equipment on Barge, Breakwater Wall, Slip/Dock, or Scow, Deck Machinery, etc.

Class 4. Deck Equipment Operator, Machineryman/Fireman (4 Equipment Units or More); Off Road Trucks; Deck Hand, Tug Engineer, Crane Maintenance (50 Ton Capacity and Under) or Backhoe Weighing (115,000 pounds or less); Assistant Tug Operator.

Class 5. Friction or Lattice Boom Cranes.

Class 6. ROV Pilot, ROV Tender

TERRAZZO FINISHER

The handling of sand, cement, marble chips, and all other materials that may be used by the Mosaic Terrazzo Mechanic, and the mixing, grinding, grouting, cleaning and sealing of all Marble, Mosaic, and Terrazzo work, floors, base, stairs, and wainscoting by hand or machine, and in addition, assisting and aiding Marble, Masonic, and Terrazzo Mechanics.

TRAFFIC SAFETY

Effective November 30, 2018, the description of the traffic safety worker trade in this County is as follows: Work associated with barricades, horses and drums used to reduce lane usage on highway work, the installation and removal of temporary, non-temporary or permanent lane, pavement or roadway markings, and the installation and removal of temporary road signs.

TRUCK DRIVER - BUILDING, HEAVY AND HIGHWAY CONSTRUCTION - EAST & WEST

Class 1. Two or three Axle Trucks. A-frame Truck when used for transportation purposes; Air Compressors and Welding Machines, including those pulled by cars, pick-up trucks and tractors; Ambulances; Batch Gate Lockers; Batch Hopperman; Car and Truck Washers; Carry-alls; Fork Lifts and Hoisters; Helpers; Mechanics Helpers and Greasers; Oil Distributors 2-man operation; Pavement Breakers; Pole Trailer, up to 40 feet; Power Mower Tractors; Self-propelled Chip Spreader; Skipman; Slurry Trucks, 2-man operation; Slurry Truck Conveyor Operation, 2 or 3 man; Teamsters; Unskilled Dumpman; and Truck Drivers hauling warning lights, barricades, and portable toilets on the job site.

Class 2. Four axle trucks; Dump Crets and Adgetors under 7 yards; Dumpsters, Track Trucks, Euclids, Hug Bottom Dump Turnapulls or Turnatrailers when pulling other than self-loading equipment or similar equipment under 16 cubic yards; Mixer Trucks under 7 yards; Ready-mix Plant Hopper Operator, and Winch Trucks, 2 Axles.

Class 3. Five axle trucks; Dump Crets and Adgetors 7 yards and over; Dumpsters, Track Trucks, Euclids, Hug Bottom Dump Turnatrailers or turnapulls when pulling other than self-loading equipment or similar equipment over 16 cubic yards; Explosives and/or Fission Material Trucks; Mixer Trucks 7 yards or over; Mobile Cranes while in transit; Oil Distributors, 1-man operation; Pole Trailer, over 40 feet; Pole and Expandable Trailers hauling material over 50 feet long; Slurry trucks, 1-man operation; Winch trucks, 3 axles or more; Mechanic--Truck Welder and Truck Painter.

Class 4. Six axle trucks; Dual-purpose vehicles, such as mounted crane trucks with hoist and accessories; Foreman; Master Mechanic; Self-loading equipment like P.B. and trucks with scoops on the front.

Other Classifications of Work:

For definitions of classifications not otherwise set out, the Department generally has on file such definitions which are available. If a task to be performed is not subject to one of the classifications of pay set out, the Department will upon being contacted state which neighboring county has such a classification and provide such rate, such rate being deemed to exist by reference in this document. If no neighboring county rate applies to the task, the Department shall undertake a special determination, such special determination being then deemed to have existed under this determination. If a project requires these, or any classification not listed, please contact IDOL at 217-782-1710 for wage rates or clarifications.

LANDSCAPING

Landscaping work falls under the existing classifications for laborer, operating engineer and truck driver. The work performed by landscape plantsman and landscape laborer is covered by the existing classification of laborer. The work performed by landscape operators (regardless of equipment used or its size) is covered by the classifications of operating engineer. The work performed by landscape truck drivers (regardless of size of truck driven) is covered by the classifications of truck driver.

MATERIAL TESTER & MATERIAL TESTER/INSPECTOR I AND II

Notwithstanding the difference in the classification title, the classification entitled "Material Tester I" involves the same job duties as the classification entitled "Material Tester/Inspector I". Likewise, the classification entitled "Material Tester II" involves the same job duties as the classification entitled "Material Tester/Inspector II".

## THE ILLINOIS STATE TOLL HIGHWAY AUTHORITY

## BID

## CONTRACT NO. I-18-4428

Bids will be received by The Illinois State Toll Highway Authority at its offices, 2700 Ogden Avenue, Downers Grove, Illinois, 60515 until 10:30:00 a.m., local time, June 25th, 2019 and immediately thereafter publicly opened and read aloud.

TO THE CHAIRMAN OF THE ILLINOIS STATE TOLL HIGHWAY AUTHORITY:

The undersigned hereby proposes to perform: Replacement of structure carrying the BNSF Railroad over the Tri-State Tollway (BN 261), Temporary shoo-fly structure carrying the BNSF Railroad over the Tri-State Tollway, Shoulder reconstruction and widening, Mainline pavement patching as necessary, Drainage improvements and culvert extensions, Temporary earth embankment supporting temporary railroad tracks, Ground improvements consisting of timber piling, Permanent and Temporary retaining walls, Erosion control measures and landscaping improvements, Temporary and permanent lighting, and Maintenance of Traffic.

The services will be performed within the: Tri-State (I-294) Tollway at Mile Post 26.6 in Cook County, Illinois.

The undersigned declares that the Advertisement for Sealed Bids, Instructions to Bidders, this Bid Form, IDOT Standard Specifications, Tollway Supplemental Specifications, Special Provisions, Plans, Addenda to the foregoing (if any), form of Agreement, forms of Contract Bonds, and other exhibits (if any), on file at the office of The Illinois State Toll Highway Authority have been carefully examined, and that the undersigned has inspected in detail the site of the proposed Work, and familiarized itself with all of the conditions affecting the Contract, and that has satisfied itself as to The Work to be done and the conditions under which it must be carried out, and understands that in submitting this Bid waives all rights to plead any misunderstanding regarding the same.

The undersigned hereby tenders this Bid to construct and complete said Work in accordance with the Plans, IDOT Standard Specifications, Tollway Supplemental Specifications (if any), and the accompanying Special Provisions now on file in the office of The Illinois State Toll Highway Authority, and the following addenda issued thereto:

Addendum No. 1 Date 5/23/19

Addendum No. 2 Date 5/30/19

Addendum No. 3 Date 5/31/19

Addendum No. 4 Date 6/4/19

Addendum No. 5 Date 6/11/19

The undersigned further agrees to furnish all necessary transportation, machinery, equipment, tools, labor and other means of construction; and to do all the work and to furnish all of the materials specified in the Contract in the manner and at the times prescribed under the supervision and direction of the Authority or its authorized representatives, for the lump sums and unit prices quoted in the following Schedule of Prices:

Accompanying this Bid is a Bid Guaranty:

(a) Evidence by a bank draft, cashier's check or certified check on ___, Bank, for $_____, payable to The Illinois State Toll Highway Authority, or

(b) A Bid Bond in favor of the Authority for $ 5% Total Bid , with a corporate surety authorized to do business in the State of Illinois.

In the event that this Bid shall be accepted by The Illinois State Toll Highway Authority, and the undersigned should fail to execute a Contract with and furnish the security required by the Authority, as set forth in the Standard Specifications, within ten (10) days after receipt of notice of the acceptance of the Bid, such draft or check shall become the property of the Authority, or if a Bid Bond has been submitted, the principal amount of said Bid Bond shall become immediately due and payable to the Authority; otherwise the Bid Guaranty will be returned to the Bidder upon written request, as soon as the Contract and Contract Bonds have been executed. If a bid guaranty is secured by a check, the check will be returned to the Bidder.

Pursuant to the provisions of the Prevailing Wage Act, 820 ILCS 130, the undersigned, as part of its Bid for the construction of The Illinois State Toll Highway **Contract I-18-4428,** hereby stipulates that, if awarded a Contract on said Bid, it will pay the laborers, mechanics and other workers who are employed in the performance of such work hourly wages not less than the minimum hourly wages stated in the instructions to Bidders; and that its computations in arriving at said Bid are based on hourly wages not less than those stated in the instructions to Bidders; and that if a Contract be entered into under said Bid, the minimum hourly wage rates stated in the instructions to Bidders shall become and be a part of said Contract as provided by law.

It is understood that the quantities of work and material shown herein in the Schedule of Prices of the Bid are approximate only, and are subject to increase or decrease as provided in the Standard Specifications. Such increase or decrease shall in no manner affect the validity of the Contract.

On the acceptance of this Bid for said work, the undersigned will furnish and deliver the Performance and Payment Bonds, in the forms required and furnished by the Authority and included in the Contract Documents, with a corporate surety acceptable to the Authority and authorized to do business in the State of Illinois, conditioned as stated in said bonds.

The undersigned has also properly executed or caused to be executed by an officer thereof, if a corporation, the non-collusion affidavit filed with this Bid.

Unless otherwise specified, a current Illinois Department of Transportation "Certificate of Eligibility" shall be included with this bid, or shall be submitted within twenty-four (24) hours after the bid opening. **Failure to meet this requirement shall be grounds for rejection of the bid, per Article 102.13 of the Tollway Supplemental Specifications.**

The undersigned is aware that, completely filled out forms of the Authority entitled "Plant and Equipment Questionnaire" and "Current Contractual Obligations," will be requested from the apparent low Bidder once the apparent low Bidder is determined as required by the Tollway Supplemental Specifications.

It is agreed that time is of the essence of this Contract and that I (we) will, in the event of my (our) failure to complete the Contract within the time limit named above, pay to The Illinois State Toll Highway Authority liquidated damages in the amount stated in the Special Provision, based on the price(s) shown in the Schedule of Prices of the Bid.

The undersigned is (check one)
an individual ☐
a Partnership ☐
a Corporation ☒ under the laws of the State of Illinois

having principal office at 929 W Adams St., Chicago, IL 60607 and has furnished to the Authority the necessary evidence of authority to transact business in the State of Illinois, in accordance with Paragraph 10 of the Instructions to Bidders.

Signed and sealed this 6 day of May, 2019, by its President, thereunto duly authorized.

[redacted] (SEAL)

[redacted] (SEAL)

Affix Corporate Seal BY:

or Power of Attorney Where Applicable

Information below to be typed or printed where applicable.

INDIVIDUAL:

| Name | Address |
|---|---|
| | |

PARTNERSHIP - NAME AND ADDRESS OF GENERAL PARTNERS:

| Name | Address |
|---|---|
| | |
| | |
| | |

INCORPORATED:

| | |
|---|---|
| Sean C Walsh<br>President | 929 W Adams St., Chicago, IL 60607<br>Address |
| Steven G Kehle<br>Vice-President | 929 W Adams St., Chicago, IL 60607<br>Address |
| Brian R Walsh<br>Secretary | 929 W Adams St., Chicago, IL 60607<br>Address |
| Timothy S Gerken<br>Treasurer | 929 W Adams St., Chicago, IL 60607<br>Address |

## Bid Notes

Each bid solicitation will have a contract-specific Bid Credit cap on the amount of Bid Credit that can be applied to the contract. This particular solicitation has a Bid Credit cap of $500,000.00. Any Bid Credits applied above and beyond the Bid Credit cap will not be considered.

A. Core Work shall be the sum of the unit prices supplied by the Bidder multiplied by the pay item quantity.
B. Unit prices for Contractor's Quality Program and Contingency Work will be supplied by the Illinois Tollway with the sum total of this work completed by the Illinois Tollway and included in the P-pages.
C. Base Bid will be calculated as: Total Amount of Core Work + Contractor's Quality Program + Total Amount of Contingency Work
D. Bid Credit is to include the total amount of Bid Credits applied to the bid
E. Award Criteria will be calculated by the Illinois Tollway and will be calculated as follows: Base Bid minus Bid Credit.

All Bid Credit Certificates used to arrive at the bid credit included on Bid Credit Line must be included in the original bid package. All Bid Credit Certificates applied to a successful bid will become null and void at the time the Bidder's award criteria figure is deemed the lowest most responsible and responsive bid and the bid is awarded by the Illinois Tollway's Board of Directors, at which time the Bid Credit Certificate shall not be available for inclusion in any other bid.

All blank spaces for bid prices must be filled in with the unit price, or lump sum price, and the total price for each and every item (which prices must be more than $0.00). Bids which do not contain a price for every item listed in the Schedule of Prices for the Contract being bid, will not be considered, unless alternate bids are requested.
The Contractor shall complete all work under this Agreement for the performance of Contract No. I-18-4428 as specified in S.P. 103.1

## THE ILLINOIS STATE TOLL HIGHWAY AUTHORITY (TOLLWAY)

### CONTRACT NO. I-18-4428

### BRIDGE RECONSTRUCTION (BN 261) BURLINGTON NORTHERN SANTA FE (BNSF) RAILWAY OVER THE TRI-STATE TOLLWAY (I-294)

### MILE POST 26.6

### SCHEDULE OF PRICES

| SP | PAY ITEM NUMBER | DESIGNATION | UNIT | QUANTITY | UNIT PRICE DOLLAR | AMOUNT DOLLAR |
|---|---|---|---|---|---|---|
| * | 20100500 | TREE REMOVAL, ACRES | ACRE | 12.0 | $ 2,950.00 | $ 35,400.00 |
| | 20101100 | TREE TRUNK PROTECTION | EACH | 10 | $ 100.00 | $ 1,000.00 |
| * | 20200100 | EARTH EXCAVATION | CU YD | 109,456 | $ 10.12 | $ 1,107,694.72 |
| * | 20201200 | REMOVAL AND DISPOSAL OF UNSUITABLE MATERIAL | CU YD | 18,360 | $ 17.76 | $ 326,073.60 |
| | 20400100 | BORROW EXCAVATION | CU YD | 41,360 | $ 20.00 | $ 827,200.00 |
| | 20400800 | FURNISHED EXCAVATION | CU YD | 87,112 | $ 6.00 | $ 522,672.00 |
| | 20800150 | TRENCH BACKFILL | CU YD | 5,210 | $ 88.60 | $ 461,606.00 |
| | 20900110 | POROUS GRANULAR BACKFILL | CU YD | 5,018 | $ 61.61 | $ 309,158.98 |
| | 25000400 | NITROGEN FERTILIZER NUTRIENT | POUND | 475 | $ 3.00 | $ 1,425.00 |
| | 25000500 | PHOSPHORUS FERTILIZER NUTRIENT | POUND | 62 | $ 3.00 | $ 186.00 |
| | 25000600 | POTASSIUM FERTILIZER NUTRIENT | POUND | 1,162 | $ 3.00 | $ 3,486.00 |
| | 25100127 | MULCH, METHOD 3A | ACRE | 25.3 | $ 2,400.00 | $ 60,720.00 |
| | 25100630 | EROSION CONTROL BLANKET | SQ YD | 72,154 | $ 1.10 | $ 79,369.40 |
| | 25200100 | SODDING | SQ YD | 16,686 | $ 7.00 | $ 116,802.00 |
| | 25200110 | SODDING, SALT TOLERANT | SQ YD | 2,192 | $ 8.00 | $ 17,536.00 |
| | 25200200 | SUPPLEMENTAL WATERING | UNIT | 349 | $ 50.00 | $ 17,450.00 |
| | 28000250 | TEMPORARY EROSION CONTROL SEEDING | POUND | 2,520 | $ 2.50 | $ 6,300.00 |
| | 28100107 | STONE RIPRAP, CLASS A4 | SQ YD | 40 | $ 134.87 | $ 5,394.80 |
| | 28200200 | FILTER FABRIC | SQ YD | 708 | $ 3.72 | $ 2,633.76 |
| | 31100200 | SUBBASE GRANULAR MATERIAL, TYPE A | CU YD | 27 | $ 54.19 | $ 1,463.13 |

## THE ILLINOIS STATE TOLL HIGHWAY AUTHORITY (TOLLWAY)

### CONTRACT NO. I-18-4428

### BRIDGE RECONSTRUCTION (BN 261) BURLINGTON NORTHERN SANTA FE (BNSF) RAILWAY OVER THE TRI-STATE TOLLWAY (I-294)

### MILE POST 26.6

### SCHEDULE OF PRICES

| SP | PAY ITEM NUMBER | DESIGNATION | UNIT | QUANTITY | UNIT PRICE DOLLAR | AMOUNT DOLLAR |
|---|---|---|---|---|---|---|
| | 31100500 | SUBBASE GRANULAR MATERIAL, TYPE A 6" | SQ YD | 1,866 | $ 10.83 | $ 20,208.78 |
| | 31101200 | SUBBASE GRANULAR MATERIAL, TYPE B 4" | SQ YD | 980 | $ 27.81 | $ 27,253.80 |
| | 31102000 | SUBBASE GRANULAR MATERIAL, TYPE C | CU YD | 12 | $ 295.84 | $ 3,550.08 |
| | 35102400 | AGGREGATE BASE COURSE, TYPE B 12" | SQ YD | 3,110 | $ 24.57 | $ 76,412.70 |
| | 40200700 | AGGREGATE SURFACE COURSE, TYPE A 6" | SQ YD | 1,441 | $ 19.10 | $ 27,523.10 |
| | 40201000 | AGGREGATE FOR TEMPORARY ACCESS | TON | 840 | $ 31.27 | $ 26,266.80 |
| | 40600275 | BITUMINOUS MATERIALS (PRIME COAT) | POUND | 6,998 | $ 0.01 | $ 69.98 |
| | 40600290 | BITUMINOUS MATERIALS (TACK COAT) | POUND | 1,875 | $ 0.01 | $ 18.75 |
| | 40600982 | HOT-MIX ASPHALT SURFACE REMOVAL - BUTT JOINT | SQ YD | 24 | $ 26.14 | $ 627.36 |
| | 40603085 | HOT-MIX ASPHALT BINDER COURSE, IL-19.0, N70 | TON | 348 | $ 92.52 | $ 32,196.96 |
| | 40603340 | HOT-MIX ASPHALT SURFACE COURSE, MIX "D", N70 | TON | 641 | $ 108.93 | $ 69,824.13 |
| | 42000060 | WELDED WIRE REINFORCEMENT | SQ YD | 24 | $ 27.00 | $ 648.00 |
| | 42000501 | PORTLAND CEMENT CONCRETE PAVEMENT 10" (JOINTED) | SQ YD | 203 | $ 77.00 | $ 15,631.00 |
| | 42001300 | PROTECTIVE COAT | SQ YD | 1,652 | $ 0.45 | $ 743.40 |

## THE ILLINOIS STATE TOLL HIGHWAY AUTHORITY (TOLLWAY)

### CONTRACT NO. I-18-4428

### BRIDGE RECONSTRUCTION (BN 261) BURLINGTON NORTHERN SANTA FE (BNSF) RAILWAY OVER THE TRI-STATE TOLLWAY (I-294)

### MILE POST 26.6

### SCHEDULE OF PRICES

| SP | PAY ITEM NUMBER | DESIGNATION | UNIT | QUANTITY | UNIT PRICE DOLLAR | AMOUNT DOLLAR |
|---|---|---|---|---|---|---|
| | 42400200 | PORTLAND CEMENT CONCRETE SIDEWALK 5 INCH | SQ FT | 8,824 | $ 7.25 | $ 63,974.00 |
| | 42400800 | DETECTABLE WARNINGS | SQ FT | 50 | $ 40.00 | $ 2,000.00 |
| | 44000100 | PAVEMENT REMOVAL | SQ YD | 4,527 | $ 18.73 | $ 84,790.71 |
| | 44000157 | HOT-MIX ASPHALT SURFACE REMOVAL, 2" | SQ YD | 11,652 | $ 1.76 | $ 20,507.52 |
| | 44000400 | GUTTER REMOVAL | FOOT | 501 | $ 3.78 | $ 1,893.78 |
| | 44000500 | COMBINATION CURB AND GUTTER REMOVAL | FOOT | 2,152 | $ 5.81 | $ 12,503.12 |
| | 44000600 | SIDEWALK REMOVAL | SQ FT | 4,950 | $ 1.52 | $ 7,524.00 |
| | 44001980 | CONCRETE BARRIER REMOVAL | FOOT | 395 | $ 18.72 | $ 7,394.40 |
| | 44004000 | PAVED DITCH REMOVAL | FOOT | 1,196 | $ 12.27 | $ 14,674.92 |
| | 44004250 | PAVED SHOULDER REMOVAL | SQ YD | 8,123 | $ 4.94 | $ 40,127.62 |
| | 44201747 | CLASS D PATCHES, TYPE IV, 8 INCH | SQ YD | 1,866 | $ 113.72 | $ 212,201.52 |
| * | 50100300 | REMOVAL OF EXISTING STRUCTURES NO. 1 | EACH | 1 | $ 3,576,000.00 | $ 3,576,000.00 |
| * | 50100400 | REMOVAL OF EXISTING STRUCTURES NO. 2 | EACH | 1 | $ 200,000.00 | $ 200,000.00 |
| | 50104400 | CONCRETE HEADWALL REMOVAL | EACH | 10 | $ 1,225.00 | $ 12,250.00 |
| | 50157300 | PROTECTIVE SHIELD | SQ YD | 1,980 | $ 0.01 | $ 19.80 |
| | 50200100 | STRUCTURE EXCAVATION | CU YD | 14,485 | $ 19.12 | $ 276,953.20 |
| * | 50201101 | COFFERDAM (TYPE 1) (LOCATION - 1) | EACH | 1 | $ 1.00 | $ 1.00 |

## THE ILLINOIS STATE TOLL HIGHWAY AUTHORITY (TOLLWAY)

### CONTRACT NO. I-18-4428

### BRIDGE RECONSTRUCTION (BN 261) BURLINGTON NORTHERN SANTA FE (BNSF) RAILWAY OVER THE TRI-STATE TOLLWAY (I-294)

### MILE POST 26.6

### SCHEDULE OF PRICES

| SP | PAY ITEM NUMBER | DESIGNATION | UNIT | QUANTITY | UNIT PRICE DOLLAR | AMOUNT DOLLAR |
|---|---|---|---|---|---|---|
| | 50300225 | CONCRETE STRUCTURES | CU YD | 651.9 | $ 883.60 | $ 576,018.84 |
| | 50401205 | PRECAST CONCRETE CAPS | EACH | 1,929 | $ 191.84 | $ 370,059.36 |
| * | 50500105 | FURNISHING AND ERECTING STRUCTURAL STEEL | L. SUM | 1 | $16,141,000.00 | $16,141,000.00 |
| | 50500505 | STUD SHEAR CONNECTORS | EACH | 1,985 | $ 10.00 | $ 19,850.00 |
| | 50800105 | REINFORCEMENT BARS | POUND | 490,410 | $ 1.26 | $ 617,916.60 |
| | 50800205 | REINFORCEMENT BARS, EPOXY COATED | POUND | 328,372 | $ 1.26 | $ 413,748.72 |
| | 50800515 | BAR SPLICERS | EACH | 193 | $ 56.39 | $ 10,883.27 |
| | 50901760 | PIPE HANDRAIL | FOOT | 248 | $ 142.00 | $ 35,216.00 |
| | 51200205 | FURNISHING UNTREATED PILES 30.1-45 FEET | FOOT | 65,238 | $ 12.75 | $ 831,784.50 |
| | 51200305 | FURNISHING UNTREATED PILES OVER 45 FEET | FOOT | 689 | $ 12.75 | $ 8,784.75 |
| | 51201900 | FURNISHING STEEL PILES HP14X89 | FOOT | 6,104 | $ 42.00 | $ 256,368.00 |
| | 51202305 | DRIVING PILES | FOOT | 72,031 | $ 0.01 | $ 720.31 |
| | 51202900 | TEST PILE TIMBER | EACH | 12 | $ 10,000.00 | $ 120,000.00 |
| | 51203900 | TEST PILE STEEL HP14X89 | EACH | 5 | $ 10,000.00 | $ 50,000.00 |
| | 51204650 | PILE SHOES | EACH | 108 | $ 105.00 | $ 11,340.00 |
| GBSP | 51602000 | PERMANENT CASING | FOOT | 1,941 | $ 225.00 | $ 436,725.00 |
| GBSP | 51603000 | DRILLED SHAFT IN SOIL | CU YD | 1,291 | $ 1,200.00 | $ 1,549,200.00 |

## THE ILLINOIS STATE TOLL HIGHWAY AUTHORITY (TOLLWAY)

### CONTRACT NO. I-18-4428

### BRIDGE RECONSTRUCTION (BN 261) BURLINGTON NORTHERN SANTA FE (BNSF) RAILWAY OVER THE TRI-STATE TOLLWAY (I-294)

### MILE POST 26.6

### SCHEDULE OF PRICES

| SP | PAY ITEM NUMBER | DESIGNATION | UNIT | QUANTITY | UNIT PRICE DOLLAR | AMOUNT DOLLAR |
|---|---|---|---|---|---|---|
| | 52100400 | STEEL BEARING ASSEMBLY | EACH | 16 | $ 1,477.57 | $ 23,641.12 |
| | 52200010 | TEMPORARY SHEET PILING | SQ FT | 4,027 | $ 170.00 | $ 684,590.00 |
| | 52200020 | TEMPORARY SOIL RETENTION SYSTEM | SQ FT | 13,726 | $ 65.00 | $ 892,190.00 |
| | 52200100 | FURNISHING SOLDIER PILES (HP SECTION) | FOOT | 951 | $ 37.01 | $ 35,196.51 |
| | 52200105 | FURNISHING SOLDIER PILES (W SECTION) | FOOT | 4,317 | $ 80.00 | $ 345,360.00 |
| | 52200200 | DRILLING AND SETTING SOLDIER PILES (IN SOIL) | CU FT | 35,675 | $ 8.75 | $ 312,156.25 |
| | 52200250 | UNTREATED TIMBER LAGGING | SQ FT | 8,547 | $ 22.02 | $ 188,204.94 |
| | 52200700 | PRECAST MODULAR RETAINING WALL | SQ FT | 20,719 | $ 45.35 | $ 939,606.65 |
| | 52200800 | SEGMENTAL CONCRETE BLOCK WALL | SQ FT | 3,912 | $ 42.00 | $ 164,304.00 |
| | 52200900 | CONCRETE STRUCTURES (RETAINING WALL) | CU YD | 602.7 | $ 1,200.10 | $ 723,300.27 |
| | 54001001 | BOX CULVERT END SECTIONS, CULVERT NO. 1 | EACH | 1 | $ 50,000.00 | $ 50,000.00 |
| | 54001003 | BOX CULVERT END SECTIONS, CULVERT NO. 3 | EACH | 1 | $ 50,000.00 | $ 50,000.00 |
| | 54001004 | BOX CULVERT END SECTIONS, CULVERT NO. 4 | EACH | 1 | $ 50,000.00 | $ 50,000.00 |
| | 54003000 | CONCRETE BOX CULVERTS | CU YD | 841.8 | $ 797.70 | $ 671,503.86 |
| | 54010605 | PRECAST CONCRETE BOX CULVERTS 6'X5' | FOOT | 562 | $ 582.00 | $ 327,084.00 |
| | 54248510 | CONCRETE COLLAR | CU YD | 6.4 | $ 800.00 | $ 5,120.00 |
| | 550A0070 | STORM SEWERS, CLASS A, TYPE 1 15" | FOOT | 152 | $ 278.65 | $ 42,354.80 |

## THE ILLINOIS STATE TOLL HIGHWAY AUTHORITY (TOLLWAY)

### CONTRACT NO. I-18-4428

### BRIDGE RECONSTRUCTION (BN 261) BURLINGTON NORTHERN SANTA FE (BNSF) RAILWAY OVER THE TRI-STATE TOLLWAY (I-294)

### MILE POST 26.6

### SCHEDULE OF PRICES

| SP | PAY ITEM NUMBER | DESIGNATION | UNIT | QUANTITY | UNIT PRICE DOLLAR | AMOUNT DOLLAR |
|---|---|---|---|---|---|---|
| | 550A0120 | STORM SEWERS, CLASS A, TYPE 1 24" | FOOT | 58 | $ 291.25 | $ 16,892.50 |
| | 550A0190 | STORM SEWERS, CLASS A, TYPE 1 48" | FOOT | 55 | $ 208.80 | $ 11,484.00 |
| | 550A0340 | STORM SEWERS, CLASS A, TYPE 2 12" | FOOT | 88 | $ 78.65 | $ 6,921.20 |
| | 550A0360 | STORM SEWERS, CLASS A, TYPE 2 15" | FOOT | 1,927 | $ 60.15 | $ 115,909.05 |
| | 550A0380 | STORM SEWERS, CLASS A, TYPE 2 18" | FOOT | 235 | $ 87.25 | $ 20,503.75 |
| | 550A0410 | STORM SEWERS, CLASS A, TYPE 2 24" | FOOT | 202 | $ 73.35 | $ 14,816.70 |
| | 550A0430 | STORM SEWERS, CLASS A, TYPE 2 30" | FOOT | 1,033 | $ 83.30 | $ 86,048.90 |
| | 550A0470 | STORM SEWERS, CLASS A, TYPE 2 42" | FOOT | 1,920 | $ 146.70 | $ 281,664.00 |
| | 550A0480 | STORM SEWERS, CLASS A, TYPE 2 48" | FOOT | 392 | $ 149.90 | $ 58,760.80 |
| | 550A5500 | STORM SEWERS, CLASS A, TYPE 2 EQUIVALENT ROUND-SIZE 42" | FOOT | 9 | $ 1,021.00 | $ 9,189.00 |
| | 55100200 | STORM SEWER REMOVAL 6" | FOOT | 41 | $ 6.70 | $ 274.70 |
| | 55100400 | STORM SEWER REMOVAL 10" | FOOT | 162 | $ 1.70 | $ 275.40 |
| | 55100500 | STORM SEWER REMOVAL 12" | FOOT | 97 | $ 2.80 | $ 271.60 |
| | 55100700 | STORM SEWER REMOVAL 15" | FOOT | 1,074 | $ 1.00 | $ 1,074.00 |
| | 55100900 | STORM SEWER REMOVAL 18" | FOOT | 44 | $ 6.25 | $ 275.00 |
| | 55101200 | STORM SEWER REMOVAL 24" | FOOT | 1,175 | $ 13.95 | $ 16,391.25 |
| | 55101600 | STORM SEWER REMOVAL 36" | FOOT | 103 | $ 10.70 | $ 1,102.10 |

## THE ILLINOIS STATE TOLL HIGHWAY AUTHORITY (TOLLWAY)

### CONTRACT NO. I-18-4428

### BRIDGE RECONSTRUCTION (BN 261) BURLINGTON NORTHERN SANTA FE (BNSF) RAILWAY OVER THE TRI-STATE TOLLWAY (I-294)

### MILE POST 26.6

### SCHEDULE OF PRICES

| SP | PAY ITEM NUMBER | DESIGNATION | UNIT | QUANTITY | UNIT PRICE DOLLAR | AMOUNT DOLLAR |
|---|---|---|---|---|---|---|
| | 55101800 | STORM SEWER REMOVAL 42" | FOOT | 526 | $ 27.75 | $ 14,596.50 |
| | 55101900 | STORM SEWER REMOVAL 48" | FOOT | 8 | $ 137.85 | $ 1,102.80 |
| | 56100900 | WATER MAIN 12" | FOOT | 1,818 | $ 137.35 | $ 249,702.30 |
| | 58700300 | CONCRETE SEALER | SQ FT | 11,810 | $ 1.30 | $ 15,353.00 |
| | 59100100 | GEOCOMPOSITE WALL DRAIN | SQ YD | 3,613 | $ 16.73 | $ 60,445.49 |
| | 60200105 | CATCH BASINS, TYPE A, 4'-DIAMETER, TYPE 1 FRAME, OPEN LID | EACH | 10 | $ 3,100.00 | $ 31,000.00 |
| | 60200305 | CATCH BASINS, TYPE A, 4'-DIAMETER, TYPE 3 FRAME AND GRATE | EACH | 8 | $ 3,717.00 | $ 29,736.00 |
| | 60200805 | CATCH BASINS, TYPE A, 4'-DIAMETER, TYPE 8 GRATE | EACH | 4 | $ 3,107.00 | $ 12,428.00 |
| | 60203805 | CATCH BASINS, TYPE A, 5'-DIAMETER, TYPE 1 FRAME, OPEN LID | EACH | 2 | $ 4,444.00 | $ 8,888.00 |
| | 60206905 | CATCH BASINS, TYPE C, TYPE 1 FRAME, OPEN LID | EACH | 2 | $ 1,588.00 | $ 3,176.00 |
| | 60218400 | MANHOLES, TYPE A, 4'-DIAMETER, TYPE 1 FRAME, CLOSED LID | EACH | 4 | $ 4,597.00 | $ 18,388.00 |
| | 60221100 | MANHOLES, TYPE A, 5'-DIAMETER, TYPE 1 FRAME, CLOSED LID | EACH | 2 | $ 4,500.00 | $ 9,000.00 |
| | 60223700 | MANHOLES, TYPE A, 6'-DIAMETER, TYPE 1 FRAME, OPEN LID | EACH | 4 | $ 6,886.00 | $ 27,544.00 |
| | 60223800 | MANHOLES, TYPE A, 6'-DIAMETER, TYPE 1 FRAME, CLOSED LID | EACH | 5 | $ 5,897.00 | $ 29,485.00 |
| | 60224446 | MANHOLES, TYPE A, 7'-DIAMETER, TYPE 1 FRAME, CLOSED LID | EACH | 4 | $ 13,097.00 | $ 52,388.00 |
| | 60224459 | MANHOLES, TYPE A, 8'-DIAMETER, TYPE 1 FRAME, CLOSED LID | EACH | 4 | $ 15,329.00 | $ 61,316.00 |
| | 60224469 | MANHOLES, TYPE A, 9'-DIAMETER, TYPE 1 FRAME, CLOSED LID | EACH | 5 | $ 19,392.00 | $ 96,960.00 |

## THE ILLINOIS STATE TOLL HIGHWAY AUTHORITY (TOLLWAY)

### CONTRACT NO. I-18-4428

### BRIDGE RECONSTRUCTION (BN 261) BURLINGTON NORTHERN SANTA FE (BNSF) RAILWAY OVER THE TRI-STATE TOLLWAY (I-294)

### MILE POST 26.6

### SCHEDULE OF PRICES

| SP | PAY ITEM NUMBER | DESIGNATION | UNIT | QUANTITY | UNIT PRICE DOLLAR | AMOUNT DOLLAR |
|---|---|---|---|---|---|---|
| | 60248900 | VALVE VAULTS, TYPE A, 5'-DIAMETER, TYPE 1 FRAME, CLOSED LID | EACH | 2 | $ 11,729.00 | $ 23,458.00 |
| | 60250200 | CATCH BASINS TO BE ADJUSTED | EACH | 1 | $ 1,179.00 | $ 1,179.00 |
| | 60253100 | CATCH BASINS TO BE RECONSTRUCTED WITH NEW TYPE 1 FRAME, CLOSED LID | EACH | 2 | $ 1,708.00 | $ 3,416.00 |
| | 60255800 | MANHOLES TO BE ADJUSTED WITH NEW TYPE 1 FRAME, CLOSED LID | EACH | 1 | $ 1,526.00 | $ 1,526.00 |
| | 60258100 | MANHOLES TO BE RECONSTRUCTED WITH NEW TYPE 1 FRAME, OPEN LID | EACH | 1 | $ 1,708.00 | $ 1,708.00 |
| | 60258200 | MANHOLES TO BE RECONSTRUCTED WITH NEW TYPE 1 FRAME, CLOSED LID | EACH | 2 | $ 1,708.00 | $ 3,416.00 |
| | 60300305 | FRAMES AND LIDS TO BE ADJUSTED | EACH | 3 | $ 1,179.00 | $ 3,537.00 |
| | 60406000 | FRAMES AND LIDS, TYPE 1, OPEN LID | EACH | 3 | $ 347.00 | $ 1,041.00 |
| | 60500040 | REMOVING MANHOLES | EACH | 17 | $ 16.00 | $ 272.00 |
| | 60500050 | REMOVING CATCH BASINS | EACH | 22 | $ 12.00 | $ 264.00 |
| | 60500060 | REMOVING INLETS | EACH | 1 | $ 275.00 | $ 275.00 |
| | 60500105 | FILLING MANHOLES | EACH | 1 | $ 1,165.00 | $ 1,165.00 |
| | 60600095 | CLASS SI CONCRETE (OUTLET) | CU YD | 8.0 | $ 450.00 | $ 3,600.00 |
| | 60603800 | COMBINATION CONCRETE CURB AND GUTTER, TYPE B-6.12 | FOOT | 2,900 | $ 28.50 | $ 82,650.00 |
| | 63200310 | GUARDRAIL REMOVAL | FOOT | 902 | $ 7.46 | $ 6,728.92 |

## THE ILLINOIS STATE TOLL HIGHWAY AUTHORITY (TOLLWAY)

### CONTRACT NO. I-18-4428

### BRIDGE RECONSTRUCTION (BN 261) BURLINGTON NORTHERN SANTA FE (BNSF) RAILWAY OVER THE TRI-STATE TOLLWAY (I-294)

### MILE POST 26.6

### SCHEDULE OF PRICES

| SP | PAY ITEM NUMBER | DESIGNATION | UNIT | QUANTITY | UNIT PRICE DOLLAR | AMOUNT DOLLAR |
|---|---|---|---|---|---|---|
| | 66900530 | SOIL DISPOSAL ANALYSIS | EACH | 200 | $ 395.00 | $ 79,000.00 |
| BDE | 70300904 | PAVEMENT MARKING TAPE, TYPE IV 4" | FOOT | 94,077 | $ 0.95 | $ 89,373.15 |
| | 70600280 | IMPACT ATTENUATORS, TEMPORARY (SEVERE USE,NARROW), TEST LEVEL 3 | EACH | 8 | $ 16,000.00 | $ 128,000.00 |
| | 70600370 | IMPACT ATTENUATORS, RELOCATE (SEVERE USE, NARROW), TEST LEVEL 3 | EACH | 82 | $ 1,700.00 | $ 139,400.00 |
| | 72100100 | SIGN PANEL OVERLAY | SQ FT | 22 | $ 40.00 | $ 880.00 |
| | 72400200 | REMOVE SIGN PANEL ASSEMBLY - TYPE B | EACH | 1 | $ 300.00 | $ 300.00 |
| | 72400330 | REMOVE SIGN PANEL - TYPE 3 | SQ FT | 96 | $ 10.00 | $ 960.00 |
| | 72400720 | RELOCATE SIGN PANEL - TYPE 2 | SQ FT | 20 | $ 50.00 | $ 1,000.00 |
| | 72400730 | RELOCATE SIGN PANEL - TYPE 3 | SQ FT | 96 | $ 15.00 | $ 1,440.00 |
| | 72700100 | STRUCTURAL STEEL SIGN SUPPORT - BREAKAWAY | POUND | 912 | $ 7.00 | $ 6,384.00 |
| | 73000100 | WOOD SIGN SUPPORT | FOOT | 18 | $ 50.00 | $ 900.00 |
| | 73400100 | CONCRETE FOUNDATIONS | CU YD | 2.4 | $ 2,433.00 | $ 5,839.20 |
| | 73700100 | REMOVE GROUND MOUNTED SIGN SUPPORT | EACH | 2 | $ 200.00 | $ 400.00 |
| | 73700200 | REMOVE CONCRETE FOUNDATION - GROUND MOUNT | EACH | 2 | $ 822.00 | $ 1,644.00 |
| | 78000100 | THERMOPLASTIC PAVEMENT MARKING - LETTERS AND SYMBOLS | SQ FT | 7.0 | $ 18.00 | $ 126.00 |
| | 78000200 | THERMOPLASTIC PAVEMENT MARKING - LINE 4" | FOOT | 2,090 | $ 3.00 | $ 6,270.00 |
| | 78000600 | THERMOPLASTIC PAVEMENT MARKING - LINE 12" | FOOT | 66 | $ 9.00 | $ 594.00 |

## THE ILLINOIS STATE TOLL HIGHWAY AUTHORITY (TOLLWAY)

### CONTRACT NO. I-18-4428

### BRIDGE RECONSTRUCTION (BN 261) BURLINGTON NORTHERN SANTA FE (BNSF) RAILWAY OVER THE TRI-STATE TOLLWAY (I-294)

### MILE POST 26.6

### SCHEDULE OF PRICES

| SP | PAY ITEM NUMBER | DESIGNATION | UNIT | QUANTITY | UNIT PRICE DOLLAR | AMOUNT DOLLAR |
|---|---|---|---|---|---|---|
| | 78005110 | EPOXY PAVEMENT MARKING - LINE 4" | FOOT | 12,544 | $ 1.20 | $ 15,052.80 |
| | 78005130 | EPOXY PAVEMENT MARKING - LINE 6" | FOOT | 9,408 | $ 1.50 | $ 14,112.00 |
| | 78005150 | EPOXY PAVEMENT MARKING - LINE 12" | FOOT | 1,111 | $ 3.00 | $ 3,333.00 |
| | 81028180 | UNDERGROUND CONDUIT, GALVANIZED STEEL, 1 1/4" DIA. | FOOT | 6 | $ 41.02 | $ 246.12 |
| | 81028210 | UNDERGROUND CONDUIT, GALVANIZED STEEL, 2 1/2" DIA. | FOOT | 138 | $ 27.36 | $ 3,775.68 |
| | 81028730 | UNDERGROUND CONDUIT, COILABLE NONMETALLIC CONDUIT, 1 1/4" DIA. | FOOT | 729 | $ 10.79 | $ 7,865.91 |
| | 81702110 | ELECTRIC CABLE IN CONDUIT, 600V (XLP-TYPE USE) 1/C NO. 10 | FOOT | 549 | $ 1.81 | $ 993.69 |
| | 81702130 | ELECTRIC CABLE IN CONDUIT, 600V (XLP-TYPE USE) 1/C NO. 6 | FOOT | 1,617 | $ 2.21 | $ 3,573.57 |
| | 81800330 | AERIAL CABLE, 3-1/C NO. 6 WITH MESSENGER WIRE | FOOT | 1,600 | $ 3.88 | $ 6,208.00 |
| | 81800400 | AERIAL CABLE, 4-1/C NO. 2 WITH MESSENGER WIRE | FOOT | 2,648 | $ 4.27 | $ 11,306.96 |
| | 83600200 | LIGHT POLE FOUNDATION, 24" DIAMETER | FOOT | 53 | $ 280.03 | $ 14,841.59 |
| | 84200600 | REMOVAL OF LIGHTING UNIT, NO SALVAGE | EACH | 4 | $ 501.11 | $ 2,004.44 |
| | 84200804 | REMOVAL OF POLE FOUNDATION | EACH | 4 | $ 501.11 | $ 2,004.44 |
| | 87900100 | DRILL EXISTING FOUNDATION | EACH | 2 | $ 616.77 | $ 1,233.54 |
| * | X0300015 | CONCRETE WINGWALL REMOVAL | EACH | 4 | $ 2,499.19 | $ 9,996.76 |
| GBSP | X0320051 | CROSSHOLE SONIC LOGGING ACCESS DUCTS | FOOT | 9,070 | $ 0.01 | $ 90.70 |
| GBSP | X0320052 | CROSSHOLE SONIC LOGGING TESTING | EACH | 3 | $ 3,428.98 | $ 10,286.94 |
| * | X0322584 | REVETMENT MAT REMOVAL | SQ YD | 333 | $ 25.17 | $ 8,381.61 |

## THE ILLINOIS STATE TOLL HIGHWAY AUTHORITY (TOLLWAY)

### CONTRACT NO. I-18-4428

### BRIDGE RECONSTRUCTION (BN 261) BURLINGTON NORTHERN SANTA FE (BNSF) RAILWAY OVER THE TRI-STATE TOLLWAY (I-294)

### MILE POST 26.6

### SCHEDULE OF PRICES

| SP | PAY ITEM NUMBER | DESIGNATION | UNIT | QUANTITY | UNIT PRICE DOLLAR | AMOUNT DOLLAR |
|---|---|---|---|---|---|---|
| * | X0322916 | PROPOSED STORM SEWER CONNECTION TO EXISTING STORM SEWER | EACH | 1 | $ 1,137.00 | $ 1,137.00 |
| * | X0322917 | PROPOSED STORM SEWER CONNECTION TO EXISTING MANHOLE | EACH | 3 | $ 1,137.00 | $ 3,411.00 |
| * | X0322924 | RETAINING WALL REMOVAL | SQ FT | 589 | $ 87.72 | $ 51,667.08 |
| * | X0324761 | DRAINAGE SYSTEM (SPECIAL) | L SUM | 1 | $ 52,878.73 | $ 52,878.73 |
| * | X0325110 | BIAXIAL GEOGRID | SQ YD | 18,724 | $ 1.50 | $ 28,086.00 |
| * | X0325815 | REMOVE EXISTING CABLE | FOOT | 364 | $ 0.80 | $ 291.20 |
| * | X0326801 | COMBINED SEWERS TO BE CLEANED | FOOT | 1,275 | $ 14.50 | $ 18,487.50 |
| * | X0326804 | COMBINED SEWER REMOVAL 42" | FOOT | 607 | $ 70.85 | $ 43,005.95 |
| * | X0326998 | FURNISH AND INSTALL HANDRAIL | FOOT | 1,270 | $ 219.98 | $ 279,374.60 |
| * | X0327141 | LIGHTING STANDARD, TYPE 4A | EACH | 2 | $ 7,343.03 | $ 14,686.06 |
| * | X0327142 | LIGHTING STANDARD, TYPE 4B | EACH | 2 | $ 10,913.27 | $ 21,826.54 |
| * | X0327149 | RELOCATE BENCH | EACH | 1 | $ 1,837.40 | $ 1,837.40 |
| * | X0327267 | SLOPE INCLINOMETER | EACH | 2 | $ 42,435.87 | $ 84,871.74 |
| * | X0327357 | CONSTRUCTION VIBRATION MONITORING | L SUM | 1 | $ 75,000.00 | $ 75,000.00 |
| * | X0327754 | TEMPORARY BULKHEAD | EACH | 6 | $ 138.00 | $ 828.00 |
| * | X0795600 | COARSE AGGREGATE | TON | 12,837 | $ 31.46 | $ 403,852.02 |
| * | X0800003 | COARSE AGGREGATE BACKFILL (SPECIAL) | CU YD | 2,110 | $ 60.20 | $ 127,022.00 |

## THE ILLINOIS STATE TOLL HIGHWAY AUTHORITY (TOLLWAY)

### CONTRACT NO. I-18-4428

### BRIDGE RECONSTRUCTION (BN 261) BURLINGTON NORTHERN SANTA FE (BNSF) RAILWAY OVER THE TRI-STATE TOLLWAY (I-294)

### MILE POST 26.6

### SCHEDULE OF PRICES

| SP | PAY ITEM NUMBER | DESIGNATION | UNIT | QUANTITY | UNIT PRICE DOLLAR | AMOUNT DOLLAR |
|---|---|---|---|---|---|---|
| GBSP | X0900064 | MEMBRANE WATERPROOFING FOR BURIED STRUCTURES | SQ YD | 2,542 | $ 40.50 | $ 102,951.00 |
| * | X1200080 | STORM SEWERS JACKED IN PLACE, 48" (SPECIAL) | FOOT | 296 | $ 0.01 | $ 2.96 |
| * | X1200140 | PRECAST CONCRETE BOX CULVERT (SPECIAL) | FOOT | 1,043 | $ 1,800.00 | $ 1,877,400.00 |
| * | X2200003 | FENCE (SPECIAL) | FOOT | 1,930 | $ 522.00 | $ 1,007,460.00 |
| * | X5030225 | CONCRETE STRUCTURES (SPECIAL) | CY YD | 36 | $ 750.00 | $ 27,000.00 |
| * | X5210015 | ELASTOMERIC BEARING ASSEMBLY, TYPE I (SPECIAL) | EACH | 64 | $ 2,865.33 | $ 183,381.12 |
| * | X5210025 | ELASTOMERIC BEARING ASSEMBLY, TYPE II (SPECIAL) | EACH | 16 | $ 1,552.29 | $ 24,836.64 |
| * | X5537500 | STORM SEWERS TO BE CLEANED 6" | FOOT | 167 | $ 15.00 | $ 2,505.00 |
| * | X5538000 | STORM SEWERS TO BE CLEANED 18" | FOOT | 63 | $ 10.50 | $ 661.50 |
| * | X5538400 | STORM SEWERS TO BE CLEANED 30" | FOOT | 272 | $ 11.50 | $ 3,128.00 |
| * | X5610651 | ABANDON EXISTING WATER MAIN, FILL WITH CLSM | FOOT | 1,793 | $ 17.90 | $ 32,094.70 |
| * | X6020293 | MANHOLES, TYPE A, 8'-DIAMETER, WITH 2 TYPE 1 FRAME, CLOSED LID, RESTRICTOR PLATE | EACH | 1 | $ 37,298.00 | $ 37,298.00 |
| * | X6020710 | CATCH BASIN TO BE ADJUSTED WITH SPECIAL FRAME AND GRATE | EACH | 2 | $ 1,179.00 | $ 2,358.00 |
| * | X6022850 | MANHOLE, SANITARY, 8' DIAMETER, TYPE 1 FRAME, CLOSED LID | EACH | 2 | $ 21,429.00 | $ 42,858.00 |
| * | X6022900 | CATCH BASINS TO BE RECONSTRUCTED (SPECIAL) | EACH | 2 | $ 1,352.00 | $ 2,704.00 |
| * | X6024200 | MANHOLES, TYPE A, 6'-DIAMETER, TYPE 1 FRAME, CLOSED LID, SPECIAL | EACH | 1 | $ 6,805.00 | $ 6,805.00 |
| * | X6026051 | SANITARY MANHOLES TO BE RECONSTRUCTED | EACH | 1 | $ 1,691.00 | $ 1,691.00 |
| * | X6026054 | SANITARY MANHOLES TO BE REMOVED | EACH | 2 | $ 137.00 | $ 274.00 |

## THE ILLINOIS STATE TOLL HIGHWAY AUTHORITY (TOLLWAY)

### CONTRACT NO. I-18-4428

### BRIDGE RECONSTRUCTION (BN 261) BURLINGTON NORTHERN SANTA FE (BNSF) RAILWAY OVER THE TRI-STATE TOLLWAY (I-294)

### MILE POST 26.6

### SCHEDULE OF PRICES

| SP | PAY ITEM NUMBER | DESIGNATION | UNIT | QUANTITY | UNIT PRICE DOLLAR | AMOUNT DOLLAR |
|---|---|---|---|---|---|---|
| * | X6028000 | MANHOLES TO BE RECONSTRUCTED (SPECIAL) | EACH | 1 | $ 1,359.00 | $ 1,359.00 |
| * | X6040205 | FRAMES AND LIDS, SPECIAL | EACH | 2 | $ 3,116.00 | $ 6,232.00 |
| * | X6640050 | CHAIN LINK FENCE, 42" ATTACHED TO STRUCTURE (SPECIAL) | FOOT | 1,683 | $ 35.38 | $ 59,544.54 |
| * | X6640312 | CHAIN LINK GATES TO BE REMOVED AND RE-ERECTED | EACH | 2 | $ 2,331.54 | $ 4,663.08 |
| * | X7015005 | CHANGEABLE MESSAGE SIGN | CAL DAY | 365 | $ 25.00 | $ 9,125.00 |
| BDE | X7030005 | TEMPORARY PAVEMENT MARKING REMOVAL | SQ FT | 31,359 | $ 0.30 | $ 9,407.70 |
| * | X7200053 | REMOVE, STORE AND RE-ERECT SIGN PANEL (SPECIAL) | EACH | 29 | $ 427.00 | $ 12,383.00 |
| * | X7330086 | FURNISH AND INSTALL WALKWAY | FOOT | 3,917 | $ 142.21 | $ 557,036.57 |
| * | X8140105 | HANDHOLE (SPECIAL) | EACH | 2 | $ 2,801.37 | $ 5,602.74 |
| * | X8300001 | LIGHT POLE, SPECIAL | EACH | 2 | $ 3,390.79 | $ 6,781.58 |
| * | X8950130 | MODIFY EXISTING LIGHTING CONTROLLER | EACH | 1 | $ 3,776.52 | $ 3,776.52 |
| * | XX004360 | SANITARY SEWER BYPASS PUMPING | L SUM | 1 | $ 51,128.00 | $ 51,128.00 |
| * | Z0022800 | FENCE REMOVAL | FOOT | 644 | $ 6.96 | $ 4,482.24 |
| * | Z0033024 | MAINTAIN EXISTING LIGHTING SYSTEM | L SUM | 1 | $ 14,718.40 | $ 14,718.40 |
| * | Z0040000 | PIEZOMETER | EACH | 4 | $ 5,788.78 | $ 23,155.12 |
| * | Z0040530 | PIPE UNDERDRAIN REMOVAL | FOOT | 2,112 | $ 1.00 | $ 2,112.00 |
| GBSP | Z0046304 | PIPE UNDERDRAIN FOR STRUCTURES 4" | FOOT | 1,474 | $ 24.41 | $ 35,980.34 |

## THE ILLINOIS STATE TOLL HIGHWAY AUTHORITY (TOLLWAY)

### CONTRACT NO. I-18-4428

### BRIDGE RECONSTRUCTION (BN 261) BURLINGTON NORTHERN SANTA FE (BNSF) RAILWAY OVER THE TRI-STATE TOLLWAY (I-294)

### MILE POST 26.6

### SCHEDULE OF PRICES

| SP | PAY ITEM NUMBER | DESIGNATION | UNIT | QUANTITY | UNIT PRICE DOLLAR | AMOUNT DOLLAR |
|---|---|---|---|---|---|---|
| GBSP | Z0046306 | PIPE UNDERDRAIN FOR STRUCTURES 6" | FOOT | 414 | $ 27.23 | $ 11,273.22 |
| * | Z0056648 | STORM SEWERS, TYPE 1, WATER MAIN QUALITY PIPE, 12" | FOOT | 33 | $ 153.65 | $ 5,070.45 |
| * | Z0056650 | STORM SEWERS, TYPE 1, WATER MAIN QUALITY PIPE, 15" | FOOT | 36 | $ 231.15 | $ 8,321.40 |
| * | Z0056668 | STORM SEWERS, TYPE 2, WATER MAIN QUALITY PIPE, 12" | FOOT | 67 | $ 120.15 | $ 8,050.05 |
| * | Z0056670 | STORM SEWERS, TYPE 2, WATER MAIN QUALITY PIPE, 18" | FOOT | 49 | $ 148.55 | $ 7,278.95 |
| * | Z0057950 | SANITARY SEWER 42" | FOOT | 615 | $ 183.20 | $ 112,668.00 |
| * | Z0065100 | SETTLEMENT PLATFORMS | EACH | 7 | $ 820.02 | $ 5,740.14 |
| * | Z0075400 | TIE RODS | EACH | 43 | $ 1,430.78 | $ 61,523.54 |
| * | Z0075496 | CONCRETE RETAINING WALL REMOVAL | FOOT | 1,171 | $ 84.72 | $ 99,207.12 |
| * | JI211110 | TOPSOIL EXCAVATION AND PLACEMENT | CU YD | 1,000 | $ 33.15 | $ 33,150.00 |
| * | JI211112 | TOPSOIL EXCAVATION AND DISPOSAL | CU YD | 18,380 | $ 11.72 | $ 215,413.60 |
| * | JI211126 | TOPSOIL FURNISH AND PLACE, 6" | SQ YD | 74,346 | $ 1.27 | $ 94,419.42 |
| * | JI213004 | EXPLORATION TRENCH, UTILITIES (HAND EXCAVATION) | FOOT | 100 | $ 416.74 | $ 41,674.00 |
| * | JI213006 | EXPLORATION TRENCH, UTILITIES (VACUUM EXCAVATION) | FOOT | 100 | $ 557.39 | $ 55,739.00 |
| * | JI406107 | ASPHALT TACK COAT | POUND | 4,475 | $ 0.01 | $ 44.75 |
| * | JI406510 | WARM-MIX ASPHALT SURFACE COURSE, MIX "D", N70 | TON | 1,012 | $ 114.62 | $ 115,995.44 |
| * | JI408100 | ASPHALT DAMP PROOFING | SQ YD | 903 | $ 103.82 | $ 93,749.46 |

## THE ILLINOIS STATE TOLL HIGHWAY AUTHORITY (TOLLWAY)

### CONTRACT NO. I-18-4428

### BRIDGE RECONSTRUCTION (BN 261) BURLINGTON NORTHERN SANTA FE (BNSF) RAILWAY OVER THE TRI-STATE TOLLWAY (I-294)

### MILE POST 26.6

### SCHEDULE OF PRICES

| SP | PAY ITEM NUMBER | DESIGNATION | UNIT | QUANTITY | UNIT PRICE DOLLAR | AMOUNT DOLLAR |
|---|---|---|---|---|---|---|
| * | JI420900 | DRILL AND GROUT #6 TIE BARS | EACH | 93 | $ 12.00 | $ 1,116.00 |
| * | JI440010 | CONCRETE MEDIAN BARRIER AND BASE REMOVAL | FOOT | 653 | $ 19.69 | $ 12,857.57 |
| * | JI481060 | AGGREGATE SHOULDERS, TYPE B 4" | SQ YD | 14 | $ 259.55 | $ 3,633.70 |
| * | JI481070 | AGGREGATE SHOULDERS, SPECIAL TYPE C | TON | 86 | $ 80.70 | $ 6,940.20 |
| * | JI481130 | AGGREGATE SHOULDERS WITH FILTER FABRIC, TYPE B 4" | SQ YD | 701 | $ 11.65 | $ 8,166.65 |
| * | JI482112 | WARM-MIX ASPHALT SHOULDERS (9 IN.) | SQ YD | 9,221 | $ 35.32 | $ 325,885.72 |
| * | JI503230 | MASS CONCRETE STRUCTURES | CU YD | 450.4 | $ 591.80 | $ 266,546.72 |
| * | JI542010 | END SECTION REMOVAL | EACH | 2 | $ 375.00 | $ 750.00 |
| * | JI580001 | RAILROAD DECK WATERPROOFING | SQ FT | 18,884 | $ 8.45 | $ 159,569.80 |
| * | JI593030 | ABANDON AND FILL EXISTING STORM SEWER | CU YD | 152 | $ 78.55 | $ 11,939.60 |
| * | JI601215 | SLOPE DRAIN, 15" | FOOT | 89 | $ 268.40 | $ 23,887.60 |
| * | JI601300 | PIPE UNDERDRAINS, 6" (SPECIAL) | FOOT | 16 | $ 87.40 | $ 1,398.40 |
| * | JI601320 | PIPE UNDERDRAINS, FABRIC LINED TRENCH 6" | FOOT | 2,469 | $ 33.85 | $ 83,575.65 |
| * | JI602117 | CATCH BASINS, TYPE G-2, TYPE G-2 MODIFIED FRAME AND GRATE | EACH | 14 | $ 5,694.00 | $ 79,716.00 |
| * | JI602184 | CATCH BASINS, TYPE A, 4'-DIAMETER, TYPE 20A FRAME AND GRATE | EACH | 2 | $ 3,385.00 | $ 6,770.00 |
| * | JI602367 | MANHOLE, TYPE A, 10'-DIAMETER, TYPE 20A FRAME AND GRATE | EACH | 4 | $ 21,340.00 | $ 85,360.00 |
| * | JI602368 | MANHOLE, TYPE A, 10'-DIAMETER, WITH TWO TYPE 1 FRAME, CLOSED LID, RESTRICTOR PLATE | EACH | 1 | $ 37,298.00 | $ 37,298.00 |

## THE ILLINOIS STATE TOLL HIGHWAY AUTHORITY (TOLLWAY)

### CONTRACT NO. I-18-4428

### BRIDGE RECONSTRUCTION (BN 261) BURLINGTON NORTHERN SANTA FE (BNSF) RAILWAY OVER THE TRI-STATE TOLLWAY (I-294)

### MILE POST 26.6

### SCHEDULE OF PRICES

| SP | PAY ITEM NUMBER | DESIGNATION | UNIT | QUANTITY | UNIT PRICE DOLLAR | AMOUNT DOLLAR |
|---|---|---|---|---|---|---|
| * | JI602791 | JUNCTION CHAMBER, LOCATION 1 | EACH | 1 | $ 275,000.00 | $ 275,000.00 |
| * | JI606015 | GUTTER, TYPE G-2, MODIFIED | FOOT | 2,875 | $ 33.00 | $ 94,875.00 |
| * | JI606020 | GUTTER, TYPE G-3 | FOOT | 471 | $ 36.53 | $ 17,205.63 |
| * | JI630002 | GALVANIZED STEEL PLATE BEAM GUARDRAIL, TYPE A, 6 FOOT POSTS | FOOT | 1,225 | $ 29.10 | $ 35,647.50 |
| * | JI631110 | TRAFFIC BARRIER TERMINAL, TYPE T1 (SPECIAL) TANGENT | EACH | 1 | $ 3,870.26 | $ 3,870.26 |
| * | JI631120 | TRAFFIC BARRIER TERMINAL, TYPE T2 | EACH | 3 | $ 1,370.80 | $ 4,112.40 |
| * | JI631135 | TRAFFIC BARRIER TERMINAL, TYPE T6B | EACH | 1 | $ 4,124.85 | $ 4,124.85 |
| * | JI637001 | CONCRETE BARRIER BASE | FOOT | 630 | $ 42.20 | $ 26,586.00 |
| * | JI637003 | CONCRETE BARRIER, DOUBLE FACE, 42 INCH | FOOT | 512 | $ 65.30 | $ 33,433.60 |
| * | JI664305 | RIGHT-OF-WAY FENCE, TYPE 1, 6' | FOOT | 3,150 | $ 16.55 | $ 52,132.50 |
| * | JI664310 | CORNER POST, RIGHT-OF-WAY FENCE, TYPE 1 | EACH | 9 | $ 615.60 | $ 5,540.40 |
| * | JI664315 | PULL POST, RIGHT-OF-WAY FENCE, TYPE 1 | EACH | 15 | $ 615.60 | $ 9,234.00 |
| * | JI664320 | END POST, RIGHT-OF-WAY FENCE, TYPE 1 | EACH | 11 | $ 615.60 | $ 6,771.60 |
| * | JI664325 | PEDESTRIAN GATE, RIGHT-OF-WAY FENCE, TYPE 1 | EACH | 5 | $ 1,621.46 | $ 8,107.30 |
| * | JI664400 | RIGHT OF WAY FENCE REMOVAL | FOOT | 4,596 | $ 7.32 | $ 33,642.72 |
| * | JI664620 | TEMPORARY CHAIN LINK FENCE 8' SCREENING, TYPE 2 | FOOT | 7,278 | $ 27.50 | $ 200,145.00 |
| * | JI669010 | REGULATED SUBSTANCES PRE-CONSTRUCTION PLAN | L SUM | 1 | $ 6,500.00 | $ 6,500.00 |
| * | JI669015 | ON-SITE MONITORING OF REGULATED SUBSTANCES | CAL DAY | 600 | $ 0.01 | $ 6.00 |
| * | JI669020 | REGULATED SUBSTANCES FINAL CONSTRUCTION REPORT | L SUM | 1 | $ 8,500.00 | $ 8,500.00 |
| * | JI680004 | HEADWALL TYPE I, 24" | EACH | 1 | $ 3,893.00 | $ 3,893.00 |

## THE ILLINOIS STATE TOLL HIGHWAY AUTHORITY (TOLLWAY)

### CONTRACT NO. I-18-4428

### BRIDGE RECONSTRUCTION (BN 261) BURLINGTON NORTHERN SANTA FE (BNSF) RAILWAY OVER THE TRI-STATE TOLLWAY (I-294)

### MILE POST 26.6

### SCHEDULE OF PRICES

| SP | PAY ITEM NUMBER | DESIGNATION | UNIT | QUANTITY | UNIT PRICE DOLLAR | AMOUNT DOLLAR |
|---|---|---|---|---|---|---|
| * | JI680011 | HEADWALL TYPE II, 48" | EACH | 1 | $ 8,415.00 | $ 8,415.00 |
| * | JI680122 | SLOPED HEADWALL TYPE III, 15", 1:3 | EACH | 2 | $ 2,802.00 | $ 5,604.00 |
| * | JI680125 | SLOPED HEADWALL TYPE III, 24", 1:3 | EACH | 3 | $ 3,961.65 | $ 11,884.95 |
| * | JI680127 | SLOPED HEADWALL TYPE III, 30", 1:3 | EACH | 1 | $ 4,947.64 | $ 4,947.64 |
| * | JI680140 | SLOPED HEADWALL TYPE III, 6", 1:6 | EACH | 2 | $ 2,753.00 | $ 5,506.00 |
| * | JI680141 | SLOPED HEADWALL TYPE III, 12", 1:6 | EACH | 1 | $ 4,688.92 | $ 4,688.92 |
| * | JI704000 | TEMPORARY CONCRETE BARRIER | FOOT | 6,113 | $ 12.25 | $ 74,884.25 |
| * | JI704005 | RELOCATE TEMPORARY CONCRETE BARRIER | FOOT | 58,013 | $ 2.00 | $ 116,026.00 |
| * | JI725000 | TERMINAL MARKER - DIRECT APPLIED | EACH | 1 | $ 47.99 | $ 47.99 |
| * | JI781010 | RAISED PAVEMENT LANE MARKER, REFLECTOR | EACH | 378 | $ 13.50 | $ 5,103.00 |
| * | JI782014 | GUARDRAIL BARRIER REFLECTORS, TYPE B | EACH | 13 | $ 9.60 | $ 124.80 |
| * | JI782022 | BARRIER WALL REFLECTORS, TYPE C | EACH | 141 | $ 7.00 | $ 987.00 |
| * | JI811276 | CONDUIT ATTACHED TO STRUCTURE, 2" DIA., STAINLESS STEEL | FOOT | 20 | $ 98.73 | $ 1,974.60 |
| * | JI830210 | TEMPORARY WOOD POLE, 90 FEET, CLASS 2, TO REMAIN IN PLACE | EACH | 2 | $ 6,034.96 | $ 12,069.92 |
| ** | JS107360 | DUST CONTROL WATERING | UNIT | 330 | $ 0.01 | $ 3.30 |
| ** | JS120100 | TRAILER MOUNTED FULL MATRIX PORTABLE CHANGEABLE MESSAGE SIGNS | EACH | 2.0 | $ 16,000.00 | $ 32,000.00 |
| ** | JS250220 | SEEDING, CLASS 2E | ACRE | 0.7 | $ 3,700.00 | $ 2,590.00 |

## THE ILLINOIS STATE TOLL HIGHWAY AUTHORITY (TOLLWAY)

### CONTRACT NO. I-18-4428

### BRIDGE RECONSTRUCTION (BN 261) BURLINGTON NORTHERN SANTA FE (BNSF) RAILWAY OVER THE TRI-STATE TOLLWAY (I-294)

### MILE POST 26.6

### SCHEDULE OF PRICES

| SP | PAY ITEM NUMBER | DESIGNATION | UNIT | QUANTITY | UNIT PRICE DOLLAR | AMOUNT DOLLAR |
|---|---|---|---|---|---|---|
| ** | JS250314 | SEEDING, CLASS 4B | ACRE | 0.6 | $ 5,000.00 | $ 3,000.00 |
| ** | JS250318 | SEEDING, CLASS 4F | ACRE | 10.2 | $ 2,900.00 | $ 29,580.00 |
| ** | JS250320 | SEEDING, CLASS 5 | ACRE | 10.2 | $ 5,000.00 | $ 51,000.00 |
| ** | JS250324 | SEEDING, CLASS 5B | ACRE | 0.6 | $ 3,400.00 | $ 2,040.00 |
| ** | JS280020 | MANAGEMENT OF EROSION AND SEDIMENT CONTROL | CAL. MO. | 33 | $ 800.00 | $ 26,400.00 |
| ** | JS280040 | EROSION AND SEDIMENT CONTROL-CLEANOUT | CU YD | 50 | $ 0.01 | $ 0.50 |
| ** | JS280050 | SILT FENCE | FOOT | 7,515 | $ 3.75 | $ 28,181.25 |
| ** | JS280051 | RE-ERECT SILT FENCE | FOOT | 1,500 | $ 2.75 | $ 4,125.00 |
| ** | JS280070 | STABILIZED CONSTRUCTION ENTRANCE | SQ YD | 2,131 | $ 0.01 | $ 21.31 |
| ** | JS280080 | FLOTATION BOOM | FOOT | 200 | $ 50.00 | $ 10,000.00 |
| ** | JS280100 | SUPER SILT FENCE | FOOT | 608 | $ 18.00 | $ 10,944.00 |
| ** | JS280120 | TREE PROTECTION | FOOT | 500 | $ 2.50 | $ 1,250.00 |
| ** | JS280140 | TEMPORARY RIPRAP | TON | 108 | $ 350.00 | $ 37,800.00 |
| ** | JS280151 | SAME-DAY STABILIZATION | SQ YD | 40,366 | $ 0.01 | $ 403.66 |
| ** | JS280180 | RECTANGULAR INLET PROTECTION | EACH | 6 | $ 200.00 | $ 1,200.00 |
| ** | JS280205 | FILTER FABRIC INLET PROTECTION, COVER TYPE | EACH | 12 | $ 175.00 | $ 2,100.00 |
| ** | JS280210 | FILTER FABRIC INLET PROTECTION, BASKET TYPE | EACH | 54 | $ 100.00 | $ 5,400.00 |

## THE ILLINOIS STATE TOLL HIGHWAY AUTHORITY (TOLLWAY)

### CONTRACT NO. I-18-4428

### BRIDGE RECONSTRUCTION (BN 261) BURLINGTON NORTHERN SANTA FE (BNSF) RAILWAY OVER THE TRI-STATE TOLLWAY (I-294)

### MILE POST 26.6

### SCHEDULE OF PRICES

| SP | PAY ITEM NUMBER | DESIGNATION | UNIT | QUANTITY | UNIT PRICE DOLLAR | AMOUNT DOLLAR |
|---|---|---|---|---|---|---|
| ** | JS280305 | TEMPORARY DITCH CHECKS | FOOT | 1,000 | $ 9.00 | $ 9,000.00 |
| * | JS670CSP | FIELD OFFICE, TYPE C (SPECIAL) | CAL MO | 36 | $ 5,371.88 | $ 193,387.68 |
| ** | JS671020 | MOBILIZATION, TOLLWAY (MODIFIED) | L SUM | 1 | $ 4,500,000.00 | $ 4,500,000.00 |
| * | JS701010 | MAINTENANCE OF TRAFFIC | L SUM | 1 | $ 1,386,000.00 | $ 1,386,000.00 |
| ** | JS810242 | CONDUIT ENCASED IN CONCRETE, 6" DIA. PVC | FOOT | 208 | $ 27.58 | $ 5,736.64 |
| ** | JS810875 | UNDERGROUND CONDUIT, COILABLE NONMETALLIC CONDUIT, 2" DIA. | FOOT | 1,865 | $ 10.70 | $ 19,955.50 |
| ** | JS810879 | UNDERGROUND CONDUIT, COILABLE NONMETALLIC CONDUIT, 4" DIA. | FOOT | 174 | $ 18.68 | $ 3,250.32 |
| ** | JS811032 | CONDUIT ATTACHED TO STRUCTURE, 1" DIA., PVC COATED GALVANIZED STEEL | FOOT | 393 | $ 38.50 | $ 15,130.50 |
| ** | JS812023 | CONDUIT EMBEDDED IN STRUCTURE, 2" DIA., PVC | FOOT | 45 | $ 11.52 | $ 518.40 |
| ** | JS812025 | CONDUIT EMBEDDED IN STRUCTURE, 3" DIA., PVC | FOOT | 738 | $ 6.82 | $ 5,033.16 |
| ** | JS813001 | JUNCTION BOX, STAINLESS STEEL, EMBEDDED IN STRUCTURE, 20" X 12" X 8" | EACH | 1 | $ 2,390.91 | $ 2,390.91 |
| ** | JS813022 | JUNCTION BOX, STAINLESS STEEL, ATTACHED TO STRUCTURE, 6" X 6" X 4" | EACH | 5 | $ 949.30 | $ 4,746.50 |
| ** | JS813053 | JUNCTION BOX, STAINLESS STEEL, ATTACHED TO STRUCTURE, 12" X 10" X 6" | EACH | 1 | $ 1,741.20 | $ 1,741.20 |
| * | JS813083 | JUNCTION BOX, STAINLESS STEEL, ATTACHED TO STRUCTURE, 18" X 18" X 8" | EACH | 2 | $ 4,156.19 | $ 8,312.38 |
| ** | JS814002 | HEAVY-DUTY HANDHOLE, TOLLWAY | EACH | 2 | $ 2,729.09 | $ 5,458.18 |
| ** | JS817211 | ELECTRIC CABLE IN CONDUIT, 600V (XLP-TYPE USE) 1/C NO. 10 | FOOT | 2,206 | $ 1.90 | $ 4,191.40 |
| ** | JS817212 | ELECTRIC CABLE IN CONDUIT, 600V (XLP-TYPE USE) 1/C NO. 8 | FOOT | 2,309 | $ 2.10 | $ 4,848.90 |

## THE ILLINOIS STATE TOLL HIGHWAY AUTHORITY (TOLLWAY)

### CONTRACT NO. I-18-4428

### BRIDGE RECONSTRUCTION (BN 261) BURLINGTON NORTHERN SANTA FE (BNSF) RAILWAY OVER THE TRI-STATE TOLLWAY (I-294)

### MILE POST 26.6

### SCHEDULE OF PRICES

| SP | PAY ITEM NUMBER | DESIGNATION | UNIT | QUANTITY | UNIT PRICE DOLLAR | AMOUNT DOLLAR |
|---|---|---|---|---|---|---|
| ** | JS817213 | ELECTRIC CABLE IN CONDUIT, 600V (XLP-TYPE USE) 1/C NO. 6 | FOOT | 212 | $ 3.18 | $ 674.16 |
| ** | JS817215 | ELECTRIC CABLE IN CONDUIT, 600V (XLP-TYPE USE) 1/C NO. 2 | FOOT | 8,804 | $ 2.95 | $ 25,971.80 |
| ** | JS821002 | UNDERPASS LUMINAIRE, 150 WATT, HIGH PRESSURE SODIUM VAPOR | EACH | 4 | $ 2,648.70 | $ 10,594.80 |
| ** | JS821003 | TEMPORARY LUMINAIRE, SODIUM VAPOR, HORIZONTAL MOUNT, 400 WATT | EACH | 8 | $ 541.84 | $ 4,334.72 |
| ** | JS821110 | UNDERPASS LUMINAIRE, LED | EACH | 4 | $ 3,306.40 | $ 13,225.60 |
| ** | JS830027 | TEMPORARY WOOD POLE, 50 FT., CLASS 4 | EACH | 4 | $ 1,846.18 | $ 7,384.72 |
| ** | JS830030 | TEMPORARY WOOD POLE, 60 FT., CLASS 4 | EACH | 3 | $ 2,338.54 | $ 7,015.62 |
| ** | JS830033 | TEMPORARY WOOD POLE, 70 FT., CLASS 3 | EACH | 1 | $ 2,262.94 | $ 2,262.94 |
| ** | JS830034 | TEMPORARY WOOD POLE, 70 FT., CLASS 3, 15 FT. MAST ARM | EACH | 8 | $ 3,226.90 | $ 25,815.20 |
| * | JS830145 | WOOD POLE, 45 FEET, CLASS 2 | EACH | 5 | $ 1,712.96 | $ 8,564.80 |
| ** | JS836007 | LIGHT POLE FOUNDATION (ROADWAY) MEDIAN, TYPE 3 | EACH | 4 | $ 3,746.86 | $ 14,987.44 |
| ** | JS842100 | REMOVAL OF UNDERPASS LUMINAIRE | EACH | 4 | $ 244.53 | $ 978.12 |
| ** | JS842105 | POLE FOUNDATION, REMOVED | EACH | 4 | $ 366.85 | $ 1,467.40 |
| ** | JS846001 | MAINTAIN LIGHTING SYSTEM | L SUM | 1 | $ 12,824.90 | $ 12,824.90 |
| * | JT130707 | STANDBY GENERATOR AND AUTOMATIC TRANSFER SWITCH | L SUM | 1 | $ 541,360.00 | $ 541,360.00 |
| * | JT130708 | TEMPORARY PORTABLE GENERATOR | L SUM | 1 | $ 18,338.85 | $ 18,338.85 |
| * | JT130709 | WELL HOUSE ELECTRICAL WORK | L SUM | 1 | $ 97,568.85 | $ 97,568.85 |
| * | JT131005 | BUILDING INSPECTIONS | L SUM | 1 | $ 32,000.00 | $ 32,000.00 |
| * | JT132810 | ITS POLE MOUNTED ENCLOSURE (CCTV OR MVDS) | EACH | 1 | $ 24,846.57 | $ 24,846.57 |
| * | JT132814 | TIS DISCONNECT SWITCH ASSEMBLE | EACH | 1 | $ 3,346.77 | $ 3,346.77 |

## THE ILLINOIS STATE TOLL HIGHWAY AUTHORITY (TOLLWAY)

### CONTRACT NO. I-18-4428

### BRIDGE RECONSTRUCTION (BN 261) BURLINGTON NORTHERN SANTA FE (BNSF) RAILWAY OVER THE TRI-STATE TOLLWAY (I-294)

### MILE POST 26.6

### SCHEDULE OF PRICES

| SP | PAY ITEM NUMBER | DESIGNATION | UNIT | QUANTITY | UNIT PRICE DOLLAR | AMOUNT DOLLAR |
|---|---|---|---|---|---|---|
| * | JT132820 | CCTV CAMERA, ITS ASSEMBLY (TOLLWAY) | EACH | 1 | $ 4,182.64 | $ 4,182.64 |
| * | JT132830 | FIBER OPTIC COMMUNICATIONS, ITS ASSEMBLY | EACH | 1 | $ 3,166.22 | $ 3,166.22 |
| * | JT134000 | MAINTAIN INTELLIGENT TRANSPORTATION ASSEMBLY | L SUM | 1 | $ 7,155.20 | $ 7,155.20 |
| * | JT134037 | ITS ELEMENT SITE GROUNDING - POLE MOUNTED ASSEMBLY | EACH | 1 | $ 6,832.30 | $ 6,832.30 |
| * | JT135042 | WEBCAM | EACH | 1 | $ 145,550.80 | $ 145,550.80 |
| * | JT160132 | HANDHOLE FOR FIBER OPTIC CABLE, 48"X72"X36" | EACH | 13 | $ 6,165.19 | $ 80,147.47 |
| * | JT211A11 | SUBGRADE AGGREGATE 12 IN. | CU YD | 1,546 | $ 78.23 | $ 120,943.58 |
| * | JT280500 | SEDIMENT FILTER BAG | EACH | 30 | $ 170.00 | $ 5,100.00 |
| * | JT280510 | FLOC LOG | EACH | 100 | $ 150.00 | $ 15,000.00 |
| * | JT280530 | IN-LINE FLOCCULATION SYSTEM | EACH | 3 | $ 3,000.00 | $ 9,000.00 |
| * | JT285055 | ARTICULATED CONCRETE BLOCK REVETMENT SYSTEM, TYPE 1 | SQ YD | 503 | $ 145.00 | $ 72,935.00 |
| * | JT311060 | AGGREGATE SUBBALLAST (SPECIAL) | CU YD | 11,033 | $ 52.22 | $ 576,143.26 |
| * | JT546000 | TELEVISION INSPECTION OF SEWER | FOOT | 4,380 | $ 8.00 | $ 35,040.00 |
| * | JT599040 | REMOVAL OF EXISTING NOISE ABATEMENT WALL | SQ FT | 6,805 | $ 6.71 | $ 45,661.55 |
| * | JT599P01 | PERFORMANCE BASED NOISE ABATEMENT WALL (PRECAST CONCRETE) NO. 1 | L SUM | 1 | $ 800,000.00 | $ 800,000.00 |
| * | JT637023 | CONCRETE MEDIAN BARRIER TRANSITION, TYPE V-F | FOOT | 118 | $ 185.50 | $ 21,889.00 |
| * | JT701030 | SUPPLEMENTAL BARRICADE | EACH/DAY | 1,000 | $ 2.00 | $ 2,000.00 |
| * | JT701031 | SUPPLEMENTAL SIGNING | SQ FT | 200 | $ 15.00 | $ 3,000.00 |
| * | JT701032 | SUPPLEMENTAL FLASHING ARROW BOARD (PER DAY) | EACH/DAY | 30 | $ 25.00 | $ 750.00 |
| * | JT701033 | SUPPLEMENTAL FLASHING ARROW BOARD (PER WEEK) | EACH/WEEK | 4 | $ 100.00 | $ 400.00 |

## THE ILLINOIS STATE TOLL HIGHWAY AUTHORITY (TOLLWAY)

### CONTRACT NO. I-18-4428

### BRIDGE RECONSTRUCTION (BN 261) BURLINGTON NORTHERN SANTA FE (BNSF) RAILWAY OVER THE TRI-STATE TOLLWAY (I-294)

### MILE POST 26.6

### SCHEDULE OF PRICES

| SP | PAY ITEM NUMBER | DESIGNATION | UNIT | QUANTITY | UNIT PRICE DOLLAR | AMOUNT DOLLAR |
|---|---|---|---|---|---|---|
| * | JT701034 | SUPPLEMENTAL FLASHING ARROW BOARD (PER MONTH) | EACH/ MONTH | 4 | $ 250.00 | $ 1,000.00 |
| * | JT701035 | SUPPLEMENTAL MAINTENANCE OF TRAFFIC | DAY | 30 | $ 150.00 | $ 4,500.00 |
| * | JT703104 | LATE SEASON TEMPORARY PAVEMENT MARKING, 4" | FOOT | 243,352 | $ 0.10 | $ 24,335.20 |
| * | JT726040 | REMOVE AND REINSTALL MILE POST MARKER | EACH | 2 | $ 400.00 | $ 800.00 |
| * | JT783005 | WATERBLAST PAVEMENT MARKING REMOVAL WITH VACUUM RECOVERY | SQ FT | 90,051 | $ 0.10 | $ 9,005.10 |
| * | JT783009 | RAISED PAVEMENT LANE MARKER, REFLECTOR REMOVAL | EACH | 378 | $ 6.00 | $ 2,268.00 |
| * | JT810873 | UNDERGROUND CONDUIT, COILABLE NONMETALLIC CONDUIT, SDR 11, 1 1/4" DIA. | FOOT | 272 | $ 10.81 | $ 2,940.32 |
| * | JT810874 | UNDERGROUND CONDUIT, COILABLE NONMETALLIC CONDUIT, SDR 11, 1 1/2" DIA. | FOOT | 2,575 | $ 145.90 | $ 375,692.50 |
| * | JT810881 | UNDERGROUND CONDUIT, COILABLE NONMETALLIC CONDUIT, SDR 11, 6" DIA. | FOOT | 1,782 | $ 19.08 | $ 34,000.56 |
| ** | JT830042 | WOOD POLE, 90 FT., CLASS 2 | EACH | 4 | $ 4,847.56 | $ 19,390.24 |
| * | JT836029 | ITS CONCRETE SEVICE PAD, TYPE C | EACH | 1 | $ 5,514.55 | $ 5,514.55 |
| * | JT844010 | REMOVE AND REINSTALL LIGHTING UNIT | EACH | 4 | $ 2,353.79 | $ 9,415.16 |
| * | JT900442 | CURED-IN-PLACE PIPE LINER, 42" | FOOT | 667 | $ 202.47 | $ 135,047.49 |
| * | JT901056 | LOCATOR TRACER WIRE | FOOT | 5,169 | $ 0.85 | $ 4,393.65 |
| * | JT901135 | DEWATERING, SPECIAL | L SUM | 1 | $ 244,077.95 | $ 244,077.95 |
| | | | | | TOTAL AMOUNT OF CORE WORK: | $56,402,869 87 |
| | | | | | | |
| * | JT155001 | CONTRACTOR'S QUALITY PROGRAM | L SUM | 1 | $1,110,000 | $1,110,000.00 |
| | | | | | | |

## THE ILLINOIS STATE TOLL HIGHWAY AUTHORITY (TOLLWAY)

### CONTRACT NO. I-18-4428

### BRIDGE RECONSTRUCTION (BN 261) BURLINGTON NORTHERN SANTA FE (BNSF) RAILWAY OVER THE TRI-STATE TOLLWAY (I-294)

### MILE POST 26.6

### SCHEDULE OF PRICES

| SP | PAY ITEM NUMBER | DESIGNATION | UNIT | QUANTITY | UNIT PRICE DOLLAR | AMOUNT DOLLAR |
|---|---|---|---|---|---|---|
| * | JT150100 | CONTRACT SPECIFIED EXTRA WORK ITEMS | UNIT | 100,000 | $ 1.00 | $ 100,000.00 |
| * | JT151500 | CONTRACT ADJUSTMENT ALLOWANCE FOR TEMPERATURE CONTROL OF CONCRETE | UNIT | 75,000 | $ 1.00 | $ 75,000.00 |
| * | JT154005 | EMERGENCY PAVEMENT AND SHOULDER REPAIRS | UNIT | 25,000 | $ 1.00 | $ 25,000.00 |
| * | JT154016 | ALLOWANCE FOR UNFORESEEN EROSION CONTROL MEASURES | UNIT | 20,000 | $ 1.00 | $ 20,000.00 |
| * | JT154045 | CONTRACT ALLOWANCE FOR COLD WEATHER PAVEMENT MARKINGS | UNIT | 50,000 | $ 1.00 | $ 50,000.00 |
| * | JT154051 | CONTRACT ALLOWANCE FOR UNSUITABLE SOIL | UNIT | 6,000,000 | $ 1.00 | $ 6,000,000.00 |
| * | JT154067 | CONTRACT ALLOWANCE FOR CONSTRUCTIONWORKS APPRENTICES | UNIT | 100,000 | $ 1.00 | $ 100,000.00 |
| * | JT154100 | ALLOWANCE FOR SUPPLEMENTAL FLAGGING | UNIT | 300,000 | $ 1.00 | $ 300,000.00 |
| * | JT154103 | ALLOWANCE FOR RAILROAD FLAGGING AND SERVICES | UNIT | 13,000,000 | $ 1.00 | $ 13,000,000.00 |
| * | JT154150 | ALLOWANCE FOR STEEL COSTS ADJUSTMENT | UNIT | 75,000 | $ 1.00 | $ 75,000.00 |
| * | JT154160 | ALLOWANCE FOR FUEL COSTS ADJUSTMENT | UNIT | 50,000 | $ 1.00 | $ 50,000.00 |
| | | | | | | |
| | 999NEG20 | DAMAGE TO ILLINOIS TOLLWAY'S OPERATIONAL FACILITIES PER S.P. 115.5 - TRI-STATE | HOUR | | (10,000) | |
| | 999NEG30 | DAMAGE TO ILLINOIS TOLLWAY'S OPERATIONAL FACILITIES PER S.P. 115.5 - ALL ROADWAYS OFF-PEAK | HOUR | | (2,000) | |
| | 999NEG31 | DAMAGE TO ELECTRICAL FACILITIES PER TOLLWAY SUPPL. SPEC. 107.30 (b) | INC/DAY | | (1,000) | |

## THE ILLINOIS STATE TOLL HIGHWAY AUTHORITY (TOLLWAY)

**CONTRACT NO. I-18-4428**

**BRIDGE RECONSTRUCTION (BN 261) BURLINGTON NORTHERN SANTA FE (BNSF) RAILWAY OVER**

**THE TRI-STATE TOLLWAY (I-294)**

**MILE POST 26.6**

**SCHEDULE OF PRICES**

| SP | PAY ITEM NUMBER | DESIGNATION | UNIT | QUANTITY | UNIT PRICE DOLLAR | AMOUNT DOLLAR |
|---|---|---|---|---|---|---|
| | 999NEG32 | LIQUIDATED DAMAGES FOR DELAY IN SUBMITTAL OF PROGRESS SCHEDULE PER TOLLWAY SUPPL. SPEC. 108.02 (e) | DAY | | (300) | |
| | 999NEG33 | NON-COMPLIANCE WITH EROSION AND SEDIMENT CONTROL PER TOLLWAY SUPPL. SPEC. 280.02 (b) (1) | INC/DAY | | See Note 2 | |
| | 999NEG34 | NON-COMPLIANCE WITH RESPONSIBILITY FOR CONSTRUCTION HAULING EQUIPMENT PER TOLLWAY SUPPL. SPEC. 105.15 | DAY | | (1,000) | |
| | 999NEG35 | FAILURE TO RESPOND TO REGULATORY AGENCY REQUESTS, PER TOLLWAY SUPPL. SPEC. 280.02 (b) (2) | OCCUR | | (25,000) | |
| | 999NEG37 | NON-COMPLIANCE WITH TOLLWAY MAINTENANCE OF TRAFFIC PER TOLLWAY SUPPL. SPEC. 701.01 (b) (1) | INC/DAY | | (2,500) | |
| | 999NEG38 | FAILURE TO RESPOND TO RE-ESTABLISH DEVICES PER TOLLWAY SUPPL. SPEC. 701.01 (b) (2) | OCCUR | | (2,500) | |
| | 999NEG39 | FAILURE TO REPAIR IMPACT ATTENUATORS, TEMPORARY PER TOLLWAY SUPPL. SPEC. 701.01 (b) (3) | OCCUR | | (2,500) | |
| | 999NEG40 | LOSS OR DAMAGE TO TOLLWAY OWNED DEVICES PER TOLLWAY SUPPL. SPEC. 701.01 (b) (4) | SQ. FT. | | (100) | |
| | 999NEG42 | NON-COMPLIANCE WITH MAINTAIN LIGHTING SYSTEM PER TOLLWAY SUPPL. SPEC. 846.06 (a) | INC/DAY | | (1,000) | |
| | 999NEG43 | FAILURE TO RESPOND TO MAINTAIN LIGHTING SYSTEM PER TOLLWAY SUPPL. SPEC. 846.06 (b) | OCCUR | | (1,000) | |
| | 999NEG44 | LIQUIDATED DAMAGES FOR NON-COMPLETION PER S.P. 105.1.1 | CAL DAY | | (12,000) | |
| | 999NEG45 | LIQUIDATED DAMAGES FOR NON-COMPLETION PER S.P. 105.1.2 | CAL DAY | | (42,000) | |
| | 999NEG46 | LIQUIDATED DAMAGES FOR NON-COMPLETION PER S.P. 105.1.3 | CAL DAY | | (12,000) | |
| | 999NEG47 | LIQUIDATED DAMAGES FOR NON-COMPLETION PER S.P. 105.1.4 | CAL DAY | | (62,000) | |
| | 999NEG48 | LIQUIDATED DAMAGES FOR NON-COMPLETION PER S.P. 105.1.5 | CAL DAY | | (62,000) | |

## THE ILLINOIS STATE TOLL HIGHWAY AUTHORITY (TOLLWAY)

**CONTRACT NO. I-18-4428**

**BRIDGE RECONSTRUCTION (BN 261) BURLINGTON NORTHERN SANTA FE (BNSF) RAILWAY OVER THE TRI-STATE TOLLWAY (I-294)**

**MILE POST 26.6**

**SCHEDULE OF PRICES**

| SP | PAY ITEM NUMBER | DESIGNATION | UNIT | QUANTITY | UNIT PRICE DOLLAR | AMOUNT DOLLAR |
|---|---|---|---|---|---|---|
| | 999NEG49 | DAMAGE TO FIBER OPTIC UTILITIES PER S.P. 115.3 | OCCUR | | (10,000) | |
| | 999NEG52 | FAILURE TO RESPOND FOR PATCHING BARRICADES PER PORTLAND CEMENT CONCRETE PATCHING SPECIAL PROVISION | OCCUR | | (500) | |
| | 999NEG53 | NON-COMPLIANCE WITH CONTRACTOR QUALITY PROGRAM SPECIAL PROVISION | OCCUR | | (1,000) | |
| | 999NEG54 | DAMAGE TO TOLLWAY MULTI-MODE CABLE, DMS SIGNS, CAMERAS, TELECOMMUNICATION, CABLE, ELECTRICAL, WATER AND SEWER PER S.P. 115.4 | OCCUR | | (1,000) | |
| | 999NEG90 | ONE LANE OR RAMP BLOCKED PER S.P. FAILURE TO OPEN LANES TO TRAFFIC | 15 MINUTES | | (3,000) | |
| | | **ADJUSTMENTS** | | | | |
| | 999ADJ20 | PROTECTION METHOD I FOR CONCRETE IN SUBSTRUCTURES, CULVERTS, PUMP HOUSES, AND RETAINING WALLS AS PER IDOT Article 503.22 | CU YD | | See Note 1 | |
| | 999ADJ21 | PROTECTION METHOD II FOR CONCRETE IN SUBSTRUCTURES, CULVERTS, PUMP HOUSES, AND RETAINING WALLS AS PER IDOT Article 503.22 | CU YD | | See Note 1 | |
| | 999ADJ24 | PROTECTION METHODS I, II or III FOR CONCRETE IN FOOTINGS AS PER IDOT Article 503.22 | CU YD | | See Note 1 | |
| | 999ADJ25 | PROTECTION METHODS I FOR CONCRETE IN SLOPE WALLS AS PER IDOT Article 503.22 | SQ YD | | See Note 1 | |

## THE ILLINOIS STATE TOLL HIGHWAY AUTHORITY (TOLLWAY)

### CONTRACT NO. I-18-4428

### BRIDGE RECONSTRUCTION (BN 261) BURLINGTON NORTHERN SANTA FE (BNSF) RAILWAY OVER THE TRI-STATE TOLLWAY (I-294)

### MILE POST 26.6

### SCHEDULE OF PRICES

| SP | PAY ITEM NUMBER | DESIGNATION | UNIT | QUANTITY | UNIT PRICE DOLLAR | AMOUNT DOLLAR |
|---|---|---|---|---|---|---|
| | 999ADJ45 | CONSTRUCTIONWORKS APPRENTICES WAGE RATE | HOUR | | 15.00 | |
| | | TOTAL AMOUNT OF CONTRACTOR'S QUALITY PROGRAM (CQP) + CONTINGENCY WORK | | | | $ 20,905,000.00 |

6/21/19
1/2
OIC

| | |
|---|---|
| TOTAL AMOUNT OF CORE WORK + AMOUNT OF CONTRACTOR'S QUALITY PROGRAM + TOTAL AMOUNT OF CONTINGENCY WORK = TOTAL AMOUNT OF BASE BID | $77,307,869.87 |
| BID CREDIT | $209,011.50 |
| AWARD CRITERIA | $77,098,858.37 |

LEGEND FOR SP COLUMN

- * INDICATES SPECIAL PROVISION
- ** INDICATES TOLLWAY SUPPLEMENTAL SPECIFICATIONS
- *** INDICATES IDOT RECURRING SPECIAL PROVISION
- BDE INDICATES IDOT BDE SPECIAL PROVISION
- GBSP INDICATES IDOT GUIDE BRIDGE SPECIAL PROVISION

**Note 1: The Contractor should leave the unit price value blank. The unit price will be entered by the Tollway after receipt of bids.**

**Note 2: The Contractor should leave the unit price value blank. The deduction base value is $1,000.00 and will be adjusted by a Gravity Adjustment Factor according to Article 280.02(b)(1) Table A of the Supplemental Specifications, assessed for each infraction.**

OPENED 10/25 2019

BOND OR
CHECK ENCLOSED: YES X NO __

*No. 00663*

# Illinois State Toll Highway Authority

*This Certifies that Walsh Construction Co. has earned a total of $209,011.50 through a Tollway Bid Credit Program and is using that credit toward a bid project convened by the Illinois State Toll Highway Authority with the understanding that the credit is fully endorsed by the Tollway.*

*In Witness Whereof, the said Corporation has caused this Certificate to be signea by its duly authorized officers and its Corporate Seal is to be hereunto affixed this 14-June-2019*

Illinois Tollway

**The owner of this certificate #** 00663 **is tendering $** 209,011.50 **credits for use on bid for contract #** I-18-4428 **on (date)** 6/25/2019 **. I understand that any credits not utilized for a winning bid will be returned.**

**Signed:** [redacted]

Return With Bid

**ILLINOIS TOLLWAY**

**OPTION FOR**
**STEEL COST ADJUSTMENT**

The bidder shall submit this completed form with his/her bid. Failure to submit the form or properly complete contract number, company name, and sign and date the form shall make this contract exempt of steel cost adjustments for all items of steel. Failure to indicate "Yes" for any item of work will make that item of steel exempt from steel cost adjustment. After award, this form, when submitted shall become part of the contract.

**Contract No.:** I-18-4428

**Company Name:** Walsh Construction Company II, LLC

**Contractor's Option:**

Is your company opting to include this special provision as part of the contract plans for the following items of work?

| | | |
|---|---|---|
| Metal Piling | Yes | ☐ |
| Structural Steel | Yes | ☐ |
| Reinforcing Steel | Yes | ☐ |
| Dowel Bars, Tie Bars and Mesh Reinforcement | Yes | ☐ |
| Guardrail | Yes | ☐ |
| Steel Traffic Signal and Light Poles, Towers and Mast Arms | Yes | ☐ |
| Metal Railings (excluding wire fence) | Yes | ☐ |
| Frames and Grates | Yes | ☐ |

**Signature** [redacted] **Date:** 6/4/19

Return With Bid

## ILLINOIS TOLLWAY

**OPTION FOR**
**FUEL COST ADJUSTMENT**

The bidder shall submit this completed form with his/her bid. Failure to submit the form or properly complete contract number, company name, and sign and date the form shall make this contract exempt of fuel cost adjustments in all categories. Failure to indicate "Yes" for any category of work at the time of bid will make that category of work exempt from fuel cost adjustment. After award, this form, when submitted shall become part of the contract.

**Contract No.:** I-18-4428

**Company Name:** Walsh Construction Company II, LLC

**Contractor's Option:**

Is your company opting to include this special provision as part of the contract plans for the following categories of work?

| | | | |
|---|---|---|---|
| Category A | Earthwork. | Yes | ☒ |
| Category B | Subbases and Aggregate Base Courses | Yes | ☒ |
| Category C | HMA Bases, Pavements and Shoulders | Yes | ☒ |
| Category D | PCC Bases, Pavements and Shoulders | Yes | ☒ |
| Category E | Structures | Yes | ☒ |

**Signature** [redacted] **Date:** 6/6/19

## FINANCIAL DISCLOSURES AND CERTIFICATIONS

## ALERT:

**YOUR BID WILL BE DEEMED NON-RESPONSIVE and will be REJECTED if Financial Disclosures / Certifications are not submitted with your bid!**

All vendors responding to an Illinois Tollway solicitation must comply with Illinois Procurement Code 30 ILCS 500 -- specifically section 50-35 Financial Disclosures and Potential Conflicts of Interest. The Illinois Procurement Gateway (IPG) is a web based system that serves as the primary location for entering, organizing, and reviewing vendor information. The IPG allows prospective vendors to provide disclosures, registrations, and other documentation needed to do business with a State agency or university in advance of any particular procurement. It is highly recommended that vendors register on the Illinois Procurement Gateway at https://ipg/vendorreg.com

The submittal shall contain either FORMS A or FORMS B. Bids submitted without FORMS A or FORMS B shall be deemed non-responsive.

FORMS A section contains eight forms and shall be returned by Bidders that are not registered in the Illinois Procurement Gateway (IPG).

FORMS B contains three forms and shall be returned by Bidders that have a current, approved IPG registration.

***Forms A Section***

*Complete this section if you **are not using** an Illinois Procurement Gateway (IPG) Registration.*

*https://www.illinoistollway.com/doing-business/construction-engineering/forms*

1. Business and Directory Information
2. Illinois Department of Human Rights Public Contracts Number
3. Authorized to Do Business in Illinois
4. Standard Certifications
5. State Board of Elections
6. Disclosure of Business Operations in Iran
7. Financial Disclosures and Conflicts of Interest
8. Taxpayer Identification Number
9. Signature

***Forms B Section***

*Complete this section only if you **are using** a current, approved IPG Registration.*

*https://www.illinoistollway.com/doing-business/construction-engineering/forms*

1. Certification of Illinois Procurement Gateway Registration #
2. Certification Timely to this Solicitation
3. Disclosures of Lobbyist or Agent
4. Disclosure of Current and Pending Contracts
5. Signature

The Illinois Procurement Code requires the Tollway to collect financial disclosures from any known subcontractor with anticipated participation in excess of $50,000.00 at the time of the bid. Subcontractor disclosures will be requested from the successful Bidder for any

subcontractor identified in the bid immediately after the Bidder is determined to be the lowest responsive / responsible Bidder.

**REMINDER TO VENDORS SUBMITTING FORMS B**

Vendors intending to fulfill certification and disclosure requirements by supplying the State with their Illinois Procurement Gateway registration number, expiration date, and "FORMS B" documents must read this clarification document in its entirety.

VENDORS UTILIZING "FORMS B" MUST BE REGISTERED SPECIFICALLY WITH THE ILLINOIS PROCUREMENT GATEWAY TO BE DEEMED RESPONSIVE TO THIS SOLICITATION.

In order to verify that you are registered with the Illinois Procurement Gateway (IPG), please click on "Registered Vendor Directory" on the IPG homepage (https://ipg.vendorreg.com). Search for your Business Name. If your company does not appear in the search results, then you are not registered in the IPG.

To use FORMS B, vendors must be listed in the "Registered Vendor Directory" as described above, and provide a valid registration number with expiration date from the Illinois Procurement Gateway. Please note that it is possible for vendors who have registered with another government entity (such as the City of Chicago's Compliance and Certification portal) using the same portal software, to have a registration number and expiration date for a different (non-State of Illinois) application process. *Registration information from other government entities will not be accepted.*

If the "Registered Vendor Directory" does not list your company, then you must utilize the "FORMS A" option to meet the certification and disclosure requirements of this solicitation.

Every bid submitted to and contract executed by the State, and every subcontract subject to Section 20-120 of the Procurement Code shall contain a certification by the Bidder, contractor, or sub-contractor under the Section, and acknowledge that the Chief Procurement Officer may declare the related contract void if any of the certifications are false.

# RESPONSIBLE BIDDER AFFIDAVIT
## in accordance with
## PUBLIC ACT 97-0369

**CONTRACT NO:** I-18-4428
**(Enter Tollway Contract Number)**

**SUBMITTING BIDDER:** Walsh Construction Company II, LLC
**(Enter Name of Firm)**

**ADDRESS:** 929 W Adams Street

Chicago, IL 60607

**STATE OF ILLINOIS** )
) **SS**
**COUNTY OF** Cook )

The Affiant, Sean C Walsh, being first duly sworn, upon oath deposes and says:

1. That the Affiant is President of Walsh Construction Company II, LLC who is the Bidder on the above referenced contract by the Illinois State Toll Highway Authority, hereinafter "Owner" for the contract known as I-18-4428 *(enter Tollway contract number)*, between the Bidder and the Owner;

2. The Affiant hereby states that the Bidder will maintain an Illinois office as the primary place of employment for persons employed in the construction authorized by said contract if contract is so awarded.

**I am duly authorized to make this Affidavit. I know and u[redacted]and the contents of this Affidavit, and all statements herein are true and correct.**

[redacted]

**SIGNATURE OF AFFIANT**

**SUBSCRIBED AND SWORN BEFORE ME THIS** 6 **DAY OF** May, **20** 19.

Official Seal
Diana L Meziere
Notary Public, State of Illinois
My Commission Expires
12/09/2020

[redacted]

**NOTARY PUBLIC**

## ILLINOIS STATE TOLL HIGHWAY AUTHORITY

## PREFERENCES

The Illinois Procurement Code provides various preferences to promote business opportunities in Illinois.

Does Bidder make any claims for preferences? If so, please mark the applicable preference(s) and include the list of items that qualify for the preference at the end of this section and a description of why the preference applies. The State reserves the right to determine whether the preference indicated applies to Bidder.

- ☐ Resident Bidder (30 ILCS 500/45-10)
- ☐ Recycled Materials (30 ILCS 500/45-20)
- ☐ Recycled Paper (30 ILCS 500/45-25)
- ☐ Environmentally Preferable Supplies (30 ILCS 500/45-26)
- ☐ Illinois Correctional Industries (30 ILCS 500/45-30)
- ☐ Sheltered Workshops for the Severely Handicapped (30 ILCS 500/45-35)
- ☐ Gas Mileage (30 ILCS 500/45-40)
- ☐ Small Businesses (30 ILCS 500/45-45)
- ☐ Illinois Agricultural Products (30 ILCS 500/45-50)
- ☐ Corn-Based Plastics (30 ILCS 500/45-55)
- ☐ Disabled Veterans (30 ILCS 500/45-57)
- ☐ Vehicles Powered by Agricultural Commodity-Based Fuel (30 ILCS 500/45-60)
- ☐ Public Purchases in Other State (30 ILCS 520)
- ☐ Illinois Mined Coal Act (30 ILCS 555)
- ☐ Steel Products Procurement (30 ILCS 565)
- ☐ Veteran's Preference (330 ILCS 55)
- ☐ Procurement of Domestic Products (30 ILCS 517)
- ☐ Bio-based Products (30 ILCS 500/45-75)

Items that Qualify and Explanation:

None

Signature of Authorized Representative:

[redacted]

Printed Name of Authorized Representative:

Sean C Walsh

Vendor Name:

Walsh Construction Company II, LLC

Date:

6/6/2019

**THE ILLINOIS STATE TOLL HIGHWAY AUTHORITY**

**CONTRACT NO. I-18-4428**

LIST OF INDIVIDUAL CONTACTS

The Bidder is hereby requested to list those individuals to be contacted for information regarding the analysis of the various portions of the Bid.

| ITEM | INDIVIDUAL | TELEPHONE NO. | E-MAIL |
|---|---|---|---|
| Schedule of Prices | Steven G Kehle<br>David Shier | 312.563.5400 | sgkehle@walshgroup.com<br>dshier@walshgroup.com |
| Bid Guaranty | David Shier | 312-563-5400 | dshier@walshgroup.com |
| DBE 2026 | David Shier | 312-563-5400 | dshier@walshgroup.com |
| EEO Program | David Shier | 312-563-5400 | dshier@walshgroup.com |
| VOSB 2026 | David Shier | 312-563-5400 | dshier@walshgroup.com |
| Financial Disclosures Forms A or Forms B | Timothy S Gerken | 312-563-5400 | tgerken@walshgroup.com |
| | | | |
| IDOT Certificate of Eligibility | David Shier | 312-563-5400 | dshier@walshgroup.com |
| Non-Collusion Affidavit – Page R-4 | David Shier | 312-563-5400 | dshier@walshgroup.com |

**THE ILLINOIS STATE TOLL HIGHWAY AUTHORITY**
**CONTRACT NO. I-18-4428**

**AFFIDAVIT**

State of Illinois )
) SS
County of Cook )

The undersigned, being first duly sworn, on his/her oath deposes and says:

That his/~~her~~ name is Sean C Walsh, and he/she resides at [redacted]

and his/~~her~~ office is at 929 W Adams St., Chicago, IL 60607, That he/she makes, and is authorized to make

this affidavit on behalf of Walsh Construction Company II, LLC, a
(Name of Corporation, Partnership, etc.)

Limited Liability Company, formed under the laws of Illinois
(Sole proprietorship, corporation, partnership, etc.) (Name of State)

of which he/she is President.
(Sole owner, partner, president, etc.)

That this Bid (of which this Affidavit is a part) for the construction of a portion of The Illinois State Toll Highway System, described in **Contract No. I-18-4428** is submitted in good faith and not as a speculation or to be assigned or relinquished and will be executed and fulfilled by said Bidder, according to its terms, if accepted, and according to the Plans and Specifications for said construction, that this Bid is made without reference to any other Bid, that this Bidder has not offered to or received from any person, firm, board, commission, trustee or corporation any sum of money or consideration for the making of said Bid; that no inducement of any form or character other than that which appears upon the face of the Bid will be suggested, offered, paid or delivered to any person whatsoever to influence the acceptance of the said Bid or awarding of the Contract, nor has this Bidder any agreement or understanding of any kind whatsoever, with any person whomsoever to pay, deliver to, or share with any other person in any way or manner, any of the proceeds of the Contract sought by this Bid; that said Bidder has not directly or indirectly made any arrangements, contract, or understanding with any other Bidder or Bidders concerning the amount of said Bid, nor has such Bidder in any way colluded, conspired, connived, or agreed in any manner or form, with any person whomsoever to influence any Bid for said Contract, directly or indirectly.

[redacted]
(Affiant)

Sworn to before me and subscribed in my presence this 6 day of May, 2019,

[redacted]
(Notary Public)

My Commission Expires: 12/9/2020

Official Seal
Diana L Meziere
Notary Public, State of Illinois
My Commission Expires
12/09/2020

**CONTRACT NO. I-18-4428**

**PLANT AND EQUIPMENT QUESTIONNAIRE**

The Signatory of this questionnaire guarantees the truth and accuracy of all statements and of all answers to interrogatories hereinafter made.

1. KEY PERSONNEL

Identify the personnel whom, if the contract is awarded to you, will manage and supervise the work. List the General Manager or Superintendent through Shift Foreman.

**(USE BLACK INK ONLY)**

| NAME | TITLE OR POSITION IN THE FIRM | FUNCTION ON THIS PROJECT | YEARS WITH THE FIRM | YEARS OF EXPERIENCE IN SUPERVISING THIS TYPE OF WORK |
|---|---|---|---|---|
| Steven G Kehle | Sr. Business Group LDR | General Supervision | 33 | 36 |
| David Shier | Business Group LDR | Supervision | 15.75 | 36.25 |
| Phillip Griffith | Sr. Project Manager | Supervision | 13.75 | 20.75 |
| William Robida | Sr. Superentendent | Concrete Supervision | 15.75 | 41 |
| Rocky Bellis | Sr. Superentendent | Concrete Supervision | 23 | 33 |
| | | | | |
| | | | | |
| | | | | |
| | | | | |
| | | | | |
| | | | | |
| | | | | |
| | | | | |
| | | | | |
| | | | | |
| | | | | |
| | | | | |
| | | | | |
| | | | | |

**CONTRACT NO. I-18-4428**

**PLANT AND EQUIPMENT QUESTIONNAIRE**

2) The information furnished in these equipment lists 2a, 2b and 2c will be used to evaluate the Bidders' understanding of this project as well as the Bidder's capacity to carry out the project.

2a) EQUIPMENT OWNED

List the equipment which you now own that will be utilized on this contract, if awarded to you.

| QUANTITY | UNIT | DESCRIPTION, SIZE, CAPACITY, ETC. | MANUFACTURER | YEAR OF MFR. | YOUR I.D. NO. OR CODE |
|---|---|---|---|---|---|
| | | PLEASE SEE ATTACHED | | | |
| | | | | | |
| | | | | | |
| | | | | | |
| | | | | | |
| | | | | | |
| | | | | | |
| | | | | | |
| | | | | | |
| | | | | | |
| | | | | | |
| | | | | | |
| | | | | | |
| | | | | | |
| | | | | | |
| | | | | | |
| | | | | | |
| | | | | | |
| | | | | | |
| | | | | | |

# WALSH GROUP EQUIPMENT FLEET

All assets are owned and in work ready condition; As of January 1, 2019
Fleet Replacement Value is $417M

| Asset Type | Asset Description | Data Equipment Count | Average Age |
|---|---|---|---|
| Arrow/Message Boards | | 72 | 2.3 |
| | Message Sign | 58 | 6.2 |
| | Tow Behind | 56 | 5.6 |
| **Arrow/Message Boards Total** | | **189** | **3.7** |
| Attachments | | 2 | 3.1 |
| | Asphalt Planer | 2 | 5.2 |
| | Buckets | 340 | 5.5 |
| | Compaction Wheels | 7 | 11.0 |
| | Crane | 1024 | 5.0 |
| | Forks | 179 | 5.8 |
| | Grapples | 7 | 11.8 |
| | Hoe Rams/Breakers/Hammers | 39 | 4.5 |
| | Material Handling Arms | 113 | 6.6 |
| | Misc Attachments | 20 | 4.2 |
| | Plate Compactors | 4 | 4.9 |
| | Pulverizers | 7 | 6.9 |
| | Rakes | 3 | 14.4 |
| | Ripper Tooth Attachments | 13 | 10.1 |
| | Slopeboard | 1 | 4.0 |
| | Thumbs | 7 | 3.8 |
| **Attachments Total** | | **1768** | **5.5** |
| ATV/Buggies | | 7 | 2.7 |
| | ATV | 32 | 4.2 |
| | Power Buggies | 6 | 3.8 |
| **ATV/Buggies Total** | | **45** | **3.9** |
| Cargo Boxes/Utility Trailers | | 96 | 2.9 |
| | Boat Trailers | 10 | 4.7 |
| | CAR HAULER TRAILERS | 7 | 4.8 |
| | Cement Storage Trailers | 31 | 10.2 |
| | Container Boxes | 970 | 11.2 |
| | FLATBED SEMI TRAILERS/STEPDECK TRAILERS | 36 | 11.7 |
| | LOWBOY SEMI TRAILERS | 15 | 12.1 |
| | MISC TRAILERS | 169 | 7.3 |
| | PROFILOGRAPH TRAILERS | 9 | 11.0 |
| | TAG TRAILER FLAT BEDS | 80 | 9.0 |
| | TAG TRAILER LUBE BEDS | 9 | 12.6 |
| | TRAILER STORAGE | 14 | 10.8 |
| **Cargo Boxes/Utility Trailers Total** | | **1446** | **10.0** |
| Clamshell Buckets | CLAMSHELL BUCKETS | 13 | 11.3 |
| **Clamshell Buckets Total** | | **13** | **11.3** |
| Compactors | Ride-On / Self Propelled | 63 | 5.5 |
| | Trench Roller | 42 | 6.1 |
| | Walk-behind | 4 | 5.9 |
| **Compactors Total** | | **109** | **5.8** |

| Asset Type | Asset Description | Equipment Count | Average Age |
|---|---|---|---|
| Compressors | | 1 | 1.7 |
| | 1100 CFM | 1 | 8.6 |
| | 1600 CFM | 1 | 18.8 |
| | 185 CFM | 150 | 7.9 |
| | 250 CFM | 4 | 5.8 |
| | 375 CFM | 9 | 12.3 |
| | 390 CFM | 2 | 5.1 |
| | 525 CFM | 1 | 15.6 |
| | 600 CFM | 7 | 12.1 |
| **Compressors Total** | | **176** | **8.3** |
| Concrete Plants | Chiller Units | 7 | 7.6 |
| | Single Drum | 9 | 10.5 |
| **Concrete Plants Total** | | **16** | **9.2** |
| Concrete Pumps | Accessories | 29 | 9.2 |
| | Placing Booms | 7 | 7.4 |
| | Stationary Pumps | 5 | 4.5 |
| | Tow Behind Grout Pumps | 14 | 6.5 |
| | Trailer Pumps | 6 | 4.5 |
| | Trucked Mounted Pumps | 2 | 11.8 |
| **Concrete Pumps Total** | | **63** | **7.7** |
| Cranes | Boom Trucks | 1 | 0.0 |
| | Crawler | 57 | 10.2 |
| | Derrick - Misc | 2 | 4.4 |
| | Industrial Hydraulic (Carry Deck) | 2 | 9.0 |
| | Liebherr Climbing Cages 420/550/630 | 3 | 15.4 |
| | Ringers | 5 | 8.6 |
| | Rough Terrain | 57 | 9.0 |
| | Telescoping Crawler | 1 | 0.5 |
| | Tower | 8 | 11.7 |
| | Travel Lift | 6 | 5.5 |
| **Cranes Total** | | **142** | **9.4** |
| Crushers/Conveyors | Ground Conveyors | 1 | 20.7 |
| | Horizontal Impact Crushers | 1 | 5.8 |
| | Jaw Crushers | 1 | 7.9 |
| | Radial Conveyors | 2 | 8.9 |
| | Screen | 4 | 8.8 |
| **Crushers/Conveyors Total** | | **9** | **9.7** |
| Deep Foundation Piling Equipment | Impact Pile Hammers | 15 | 8.3 |
| | Misc Attachments | 18 | 12.5 |
| | Vibratory Driver Extractors | 31 | 9.3 |
| **Deep Foundation Piling Equipment Total** | | **64** | **9.9** |
| Diesel Generators | | 8 | 5.9 |
| | 125 KW | 8 | 6.7 |
| | 20 - 30 KW | 24 | 5.2 |
| | 250 KW | 1 | 16.1 |
| | 50 KW | 7 | 4.6 |
| | 575 KW | 3 | 10.8 |
| | 65 KW | 2 | 6.2 |
| | 680 KW | 3 | 7.8 |
| | 70 KW | 6 | 7.1 |
| **Diesel Generators Total** | | **62** | **6.2** |

| Asset Type | Asset Description | Equipment Count | Average Age |
|---|---|---|---|
| Dozers | 0 - 16K lbs (Cat D3, JD 450) | 10 | 5.8 |
| | 16K - 18K lbs (JD 550) | 14 | 2.7 |
| | 18K - 30K lbs (Cat D5, JD 650/700) | 21 | 3.8 |
| | 32K - 46K lbs (Cat D6N, JD 750/850) | 14 | 6.4 |
| | 32K - 46K lbs 160-190HP (Cat D6R) | 11 | 4.1 |
| **Dozers Total** | | **70** | **4.4** |
| Drills | | 2 | 3.5 |
| | Auger Drills | 7 | 9.8 |
| | Caissons | 28 | 6.2 |
| | Drill Tools | 252 | 4.0 |
| | Pneumatic Drills | 44 | 7.9 |
| | Tie Back Rigs | 2 | 10.2 |
| **Drills Total** | | **335** | **5.5** |
| Excavators/Combinations | Backhoe Loaders | 36 | 4.5 |
| | Track Excavators | 153 | 3.8 |
| | Wheel Excavators | 5 | 5.3 |
| **Excavators/Combinations Total** | | **194** | **4.0** |
| Forklifts | Straight Mast Fork Trucks | 14 | 6.5 |
| | Telescopic Rough Terrain Forklifts | 41 | 4.3 |
| | Walk Behind Stackers | 2 | 1.6 |
| **Forklifts Total** | | **57** | **4.7** |
| Haul Trucks | 30 Ton Artic | 4 | 3.7 |
| **Haul Trucks Total** | | **4** | **3.7** |
| Heaters | | 5 | 3.9 |
| | Ground Heaters | 19 | 6.3 |
| | Heating Furnaces (Kerosene & Electricity) | 15 | 5.8 |
| **Heaters Total** | | **39** | **5.8** |
| Light Plants | | 73 | 3.4 |
| | 4000W | 172 | 7.1 |
| | 6000W | 61 | 3.2 |
| **Light Plants Total** | | **306** | **5.5** |
| Loaders | Skid Steer Loaders | 45 | 3.0 |
| | Track Loaders | 1 | 1.7 |
| | Wheel | 103 | 4.1 |
| **Loaders Total** | | **149** | **3.8** |
| Machine Control/Survey Equipment | | 8 | 2.9 |
| | Base Station | 38 | 9.8 |
| | Data Collectors | 91 | 8.1 |
| | GPS Machine Control System | 64 | 7.5 |
| | Laser Equipment | 2 | 0.8 |
| | Laser Machine Control System | 4 | 8.0 |
| | Leveling Equipment | 7 | 3.3 |
| | Misc | 23 | 8.4 |
| | Rover Pack | 63 | 9.8 |
| | Total Station | 59 | 8.7 |
| **Machine Control/Survey Equipment Total** | | **359** | **8.2** |
| Manlifts/Scissors Lifts | | 5 | 0.9 |
| | 4WD Manlifts | 9 | 6.6 |
| | 4WD Scissors Lifts | 16 | 9.7 |
| | Man Basket | 25 | 7.4 |
| | Stripping Buggy | 9 | 7.1 |

| Asset Type | Asset Description | Equipment Count | Average Age |
|---|---|---|---|
| **Manlifts/Scissors Lifts Total** | | **64** | **7.3** |
| Marine | | 3 | 2.9 |
| | Barges | 6 | 8.1 |
| | Boats | 41 | 7.3 |
| | Component | 31 | 3.8 |
| | Deck Winch | 4 | 6.4 |
| | Ringer Barges | 36 | 8.6 |
| | Sectional Barges | 169 | 10.4 |
| **Marine Total** | | **290** | **8.9** |
| Minor Equipment | | 25 | 3.0 |
| | PIPE TUGGERS | 1 | 20.2 |
| | Saws | 14 | 5.2 |
| | Scabblers | 1 | 1.9 |
| | Screeds | 9 | 11.6 |
| | Trenchers | 1 | 10.8 |
| **Minor Equipment Total** | | **51** | **5.6** |
| Mixers | PORTABLE MIXERS | 2 | 13.6 |
| **Mixers Total** | | **2** | **13.6** |
| Motor Graders | 135 - 155 HP (Cat 12 H, Cat 135H) | 2 | 2.0 |
| | 148 - 185 HP (Cat 140H, Volvo G-710B) | 7 | 5.3 |
| | 198 - 235 HP (Volvo G-726B) | 1 | 5.6 |
| **Motor Graders Total** | | **10** | **4.6** |
| Office Trailers | | 6 | 3.0 |
| | 10' X 50' | 1 | 0.6 |
| | 12' X 30' | 2 | 13.3 |
| | 12' X 40' | 1 | 12.8 |
| | 12' X 50' | 2 | 14.7 |
| | 12' X 56' | 1 | 18.4 |
| | 12' X 60' | 22 | 15.6 |
| | 14' X 30' | 1 | 15.1 |
| | 14' X 50' | 1 | 13.0 |
| | 14' X 60' | 2 | 15.9 |
| | 14' X 70' | 2 | 5.6 |
| | 14' X 76' | 2 | 4.8 |
| | 24' X 50' | 1 | 8.6 |
| | 24' X 60' | 18 | 9.9 |
| | 24' X 64' | 1 | 12.4 |
| | 24' X 70' | 2 | 4.0 |
| | 28' X 70' | 1 | 13.9 |
| | 36' X 60' | 2 | 1.4 |
| | 48' X 60' | 1 | 12.2 |
| | 8' X 20' | 9 | 2.6 |
| | 8' X 30' | 1 | 5.0 |
| | 8' X 32' | 1 | 18.9 |
| | 8' X 36' | 1 | 15.3 |
| **Office Trailers Total** | | **81** | **10.2** |
| Pavers | Asphalt Pavers | 2 | 3.0 |
| | Barrier Wall Pavers (Miller 8100/8800) | 8 | 12.5 |
| | Bridge Deck Finishers | 25 | 12.1 |
| | Concrete Pavers (Gomaco 2800/6300) | 19 | 9.9 |
| | Paving Attachments | 21 | 8.7 |
| | Placers | 3 | 8.4 |
| | Placers/Spreaders | 10 | 11.9 |

| Asset Type | Asset Description | Equipment Count | Average Age |
|---|---|---|---|
| | Profilers/Millers | 2 | 9.5 |
| | Profilographs | 7 | 9.7 |
| | Road Wideners | 4 | 13.2 |
| | Soil Stabilizer | 2 | 16.7 |
| | Stationary Drive Over Truck Unloader | 2 | 8.6 |
| | Texture Cure Machines | 12 | 11.2 |
| | Trimmers/Placers/Spreaders | 13 | 10.4 |
| | Triple Tube Paver | 9 | 5.4 |
| **Pavers Total** | | **139** | **10.3** |
| Plate Compactors | | 1 | 4.3 |
| | >15,000 lbs (Force) | 1 | 0.7 |
| | 0 - 1,000 lbs (Force) | 6 | 1.8 |
| | 10,001 - 11,000 lbs (Force) | 3 | 2.0 |
| | 11,001 - 12,000 lbs (Force) | 2 | 8.0 |
| | 12,001 - 13,000 lbs (Force) | 5 | 5.1 |
| | 14,001 - 15,000 lbs (Force) | 4 | 3.0 |
| | 8,001 - 9,000 lbs (Force) | 4 | 3.7 |
| **Plate Compactors Total** | | **26** | **3.5** |
| Scales | 80 TON TRUCK SCALES | 3 | 16.8 |
| **Scales Total** | | **3** | **16.8** |
| Scrapers | Non-Motorized | 1 | 1.7 |
| **Scrapers Total** | | **1** | **1.7** |
| Sweepers/Motorized Attachments | | 3 | 5.1 |
| | Broom Sweepers | 41 | 6.7 |
| | Sweeper Attachment | 24 | 3.5 |
| **Sweepers/Motorized Attachments Total** | | **68** | **5.5** |
| Tow Behind Discs | | 1 | 4.1 |
| | TOW BEHIND DISCS | 9 | 11.2 |
| **Tow Behind Discs Total** | | **10** | **10.5** |
| Tractors | | 4 | 3.3 |
| | Rubber Tire | 5 | 6.1 |
| | Skip Loader | 2 | 3.2 |
| **Tractors Total** | | **11** | **4.6** |
| Trench/Bedding Boxes | | 7 | 3.8 |
| | BEDDING/ROCK BOXES | 15 | 5.9 |
| | TRENCH BOXES | 109 | 6.7 |
| **Trench/Bedding Boxes Total** | | **131** | **6.5** |
| Trucks | Heavy Duty Trucks | 144 | 4.8 |
| | Light Duty Trucks | 1232 | 5.1 |
| | Medium Duty Trucks | 72 | 4.0 |
| | Water Trucks | 63 | 6.7 |
| **Trucks Total** | | **1511** | **5.1** |

| Asset Type | Asset Description | Equipment Count | Average Age |
|---|---|---|---|
| Undefined | | 5 | 2.7 |
| **Undefined Total** | | **5** | **2.7** |
| Utility/Instrumentation Tools | | 1 | 3.0 |
| | Ditch Witch Line Locators | 1 | 5.0 |
| | Rebar Locators | 3 | 4.8 |
| | Ventilation Equip | 4 | 3.6 |
| | Wenches | 1 | 4.2 |
| **Utility/Instrumentation Tools Total** | | **10** | **4.1** |
| Washers/Sprayers | | 1 | 3.3 |
| | CURING SPRAYERS | 1 | 14.2 |
| | PRESSURE WASHERS | 40 | 7.9 |
| | SANDBLASTERS | 3 | 3.5 |
| **Washers/Sprayers Total** | | **45** | **7.6** |
| Water Pumps | | 7 | 4.3 |
| | 12" | 1 | 11.8 |
| | 4" | 23 | 4.0 |
| | 6" | 16 | 6.2 |
| | 8" | 9 | 7.1 |
| **Water Pumps Total** | | **56** | **5.3** |
| Welders | | 11 | 4.2 |
| | > 651 Amp | 6 | 7.6 |
| | 201 - 225 Amp | 5 | 10.4 |
| | 250 - 275 Amp | 11 | 11.1 |
| | 300 Amp | 35 | 10.5 |
| | 350 Amp | 6 | 13.2 |
| | 400 Amp | 60 | 6.8 |
| | 500 Amp | 3 | 7.3 |
| **Welders Total** | | **137** | **8.3** |
| Automobiles/SUV | SUVs | 78 | 4.1 |
| | Automobiles/ | 44 | 6.2 |
| **Automobiles/SUV Total** | | **122** | **4.9** |
| **Grand Total** | | **8385** | **6.8** |

**CONTRACT NO. I-18-4428**

**PLANT AND EQUIPMENT QUESTIONNAIRE**

2b) EQUIPMENT TO BE LEASED OR RENTED

List the equipment which you intend to rent or lease for this contract if awarded to you.

| QUANTITY | UNIT | DESCRIPTION, SIZE, CAPACITY, ETC. | MANUFACTURER | YEAR OF MFR. | PROPOSED RENTER OR LESSOR |
|---|---|---|---|---|---|
| | | | | | |
| | | | | | |
| | | | | | |
| | | | | | |
| | | | | | |
| | | | | | |
| | | | | | |
| | | | | | |
| | | | | | |
| | | | | | |
| | | | | | |
| | | | | | |
| | | | | | |
| | | | | | |
| | | | | | |
| | | | | | |
| | | | | | |
| | | | | | |
| | | | | | |
| | | | | | |
| | | | | | |
| | | | | | |
| | | | | | |

**CONTRACT NO. I-18-4428**

**PLANT AND EQUIPMENT QUESTIONNAIRE**

2c) EQUIPMENT TO BE PURCHASED

List the equipment which you intend to purchase for this contract, if awarded to you. Include pneumatic and hydraulic tools, lighting equipment, mobile or portable service/repair equipment, and equipment to be used in maintenance of traffic.

| QUANTITY | UNIT | DESCRIPTION, SIZE, CAPACITY, ETC. | MANUFACTURER | YEAR | APPROXIMATE COST |
|---|---|---|---|---|---|
| | | | | | |
| | | | | | |
| | | | | | |
| | | | | | |
| | | | | | |
| | | | | | |
| | | | | | |
| | | | | | |
| | | | | | |
| | | | | | |
| | | | | | |
| | | | | | |
| | | | | | |
| | | | | | |
| | | | | | |
| | | | | | |
| | | | | | |
| | | | | | |
| | | | | | |
| | | | | | |

**CONTRACT NO. I-18-4428**

**PLANT AND EQUIPMENT QUESTIONNAIRE**

3. SUB-CONTRACT WORK

List below the portions of the work which will be performed by subcontractors, the pay items which they relate to, the approximate value of the work to be subcontracted, and the names of firms being considered.

| SCOPE OF WORK | RELATED PAY ITEM | % OF TOTAL CONTRACT | APPROX. $ VALUE | IDENTIFIED CONTRACTOR |
|---|---|---|---|---|
| PLEASE SEE ATTACHED | | | | |
| | | | | |
| | | | | |
| | | | | |
| | | | | |
| | | | | |
| | | | | |

4. MATERIALS COMMITMENTS

Have you entered into contracts for or received firm offers for the supply of all major materials which meet requirements of the specifications for this project? Yes ☐ No ☐

If your answer is NO, explain fully below or attach an explanation.

_____

_____

_____

_____

TOLLWAY I-18-4428

| SUBCONTRACTOR(S) | SUBCONTRACTOR FEIN | ADDRESS | GENERAL TYPE OF WORK | ANTICIPATED AMOUNT TO BE PAID (TO EXTENT KNOWN) |
|---|---|---|---|---|
| VMR Contractors, Inc | | 16710 Richmond Ave., Ste. 5 Hazelcrest, IL 60429 | Rebar Installation | $ 511,750.78 |
| Alpine Demolition Services, LLC | | 3515 Stern Ave. St. Charles, IL 60174 | Demolition | $ 954,525.20 |
| La Grange Crane Service, Inc | | 6180 River Rd, Hodgkins, IL 60525 | Crane Rental | $ 74,570.00 |
| Divine Cement Inc | | 2551 Theodore St cresthill il 60403 | PCC Paving Work | $ 313,589.68 |
| Bartech Group (ECC) | | 236 E. 161st Place, Unit C and D South Holland, IL 6047 | Electric Work | $ 649,500.00 |
| Everlights Inc (ECC) | | 1900 Greenwood Street, Unit 8 Evanston, IL 60201 | Electric Work | $ 62,638.66 |
| City Lights (ECC) | | 9993 Virginia Avenue Chicago Ridge, IL 60415-0000 | Electric Work | $ 210,155.40 |
| Industrial Fence Inc | | 1300 S. Kilbourn Ave Chicago, IL 60623 | Fence & Guardrail | $ 1,149,079.60 |
| Maintenance Coatings Co (TSI) | | 543 Wood Bury St South Elgin Il 60177 | affic Control & Pavement Marki | $ 144,590.80 |
| Sanco Inc (TSI) | | 200 Quaker Rd Rockford Il 61104 | Traffic Control Work | $ 99,767.85 |
| Natural Creations Landscaping, Inc | | 356 Bruce St Joliet Il 60432 | Landscaping Work | $ 564,044.41 |
| Lotus Options, Inc | | 2 Paxos Drive Palos Hills, IL 60465 | Painting | $ 341,896.20 |
| CR Schmidt, Inc | | 3S215 Talbot Avenue Warrenville, IL 60555 | Furnish/Install Block Wall | $ 164,304.00 |
| Pine Waterproofing & Sealant, Inc | | 10209 Pacific Ave Franklin Park, IL 60131 | Furnish/Install Waterproofing | $ 460,073.00 |
| Jamart Ent Inc | | 7519 Banks St , Justice IL 60458 | Misc Trucking | $ 200,000.00 |
| RA Seaton Contractor Services, LLC | | 5100 Linden Rd. Rockford, IL 61109 | Misc Trucking | $ 179,868.71 |
| [redacted] | | [redacted] | [redacted] | $ [redacted] SW |
| DCH Construction & Hauling LLC | | 9454 Schiller Blvd. Franklin Park, IL 60131 | Misc Trucking | $ 375,000.00 [redacted] SW |
| J Ave Development, Inc | | 12300 New Ave Lemont, IL 60439 | Misc Trucking | $ 337,798.00 |

| | | | | |
|---|---|---|---|---|
| Archon Construction Co Inc | | 563 S Route 53, Addison, IL 60101 | Drainage & Water Main | $ 2,557,190.78 |
| Area Equipment, Inc | | 150 E Hill St, Villa Park, IL 60181 | Beam Erection | $3,202,411.40 |
| | | | | |
| | | | | |
| | | | | |

**CONTRACT NO. I-18-4428**

**PLANT AND EQUIPMENT QUESTIONNAIRE**

5. EXAMINATION OF SITE WORK

Have you carefully inspected the site of the work and evaluated all of the requirements with respect to your capability to provide the resources necessary to complete the work in accordance with those requirements?

YES X NO _____

6. DOCUMENT REFERENCE

In preparing your Bid did you have available for reference the following contract documents?

The Special Provisions YES X NO _____

The Contract Plans YES X NO _____

The IDOT Standard Specifications and Tollway Supplemental Specifications, latest edition as referenced in S. P. 101 YES X NO _____

Dated at Chicago this 6 day of May, 2019.

Walsh Construction Company II, LLC
Name of Organization

By _____

President
Title of Person Signing

STATE OF Illinois )
)
COUNTY OF Cook )

Sean C Walsh being duly sworn deposes and says that he/~~she~~ is President

of the above Walsh Construction Company II, LLC and that the answers to the questions in the foregoing
Name of Organization

questionnaires and all statements therein contained are true and correct.

Subscribed and sworn to me before this 6 day of May, 2019.

[redacted]
Notary Public

My Commission Expires: 12/9/2020

Official Seal
Diana L Meziere
Notary Public, State of Illinois
My Commission Expires
12/09/2020

## CONTRACT NO. I-18-4428

## CURRENT CONTRACTUAL OBLIGATIONS

Entries on this sheet are to **cover all construction work under contract or verbal performance agreement or pending award** to the contractor signing, whether as principal or as sub-contractor and with any owner including the United States government.

### WORK NOW UNDER CONTRACT AS PRINCIPAL OR JOINT VENTURE

| CONTRACT NUMBER | CONTRACT ENTERED INTO WITH (OWNER OR AGENCY) | VALUE OF WORK UNEARNED | TYPE OF WORK YET TO BE PERFORMED | ESTIMATED COMPLETION DATE |
|---|---|---|---|---|
| | See Attached IDOT Super Unlimited Certificate of Eligibility | | | |
| | | | | |
| | | | | |

TOTAL UNDER CONTRACT AND UNEARNED

### WORK AS SUB-CONTRACTOR

| CONTRACTOR | OWNER OR AGENCY | VALUE OF WORK UNEARNED | TYPE OF WORK YET TO BE PERFORMED | ESTIMATED COMPLETION DATE |
|---|---|---|---|---|
| | | | | |
| | | | | |
| | | | | |

TOTAL SUBLET AND UNEARNED

### LOW BIDS SUBMITTED, OPENED AND NOT APPROVED

| CONTRACT NUMBER | OWNER OR AGENCY | VALUE OF WORK UNEARNED | TYPE OF WORK YET TO BE PERFORMED | ESTIMATED COMPLETION DATE |
|---|---|---|---|---|
| | | | | |
| | | | | |
| | | | | |

TOTAL OF BIDS PENDING AWARD _____

I hereby certify that, to the best of my knowledge and belief, the above tabulations are true and complete and that my/our latest financial statement is available upon request to verify my/our financial position as of this date.

Walsh Construction Company II, LLC — Sean C Walsh [redacted]

BIDDER

6/6/2019 — [redacted] — President

DATE — BY: [redacted] SIGNATURE — TITLE

SUB-CONTRACTOR — SUB-CONTRACTOR

**Illinois State Toll Highway Authority**

**SPECIAL PROVISION**

**FOR**

**DISADVANTAGED BUSINESS ENTERPRISE PARTICIPATION**

## 1. POLICY STATEMENT

It is the policy of the Illinois State Toll Highway Authority ("ISTHA" or "Tollway") that qualified and *bona fide* Disadvantaged Business Enterprises (DBEs), as that term is defined herein, have maximum feasible opportunities to participate fully in the performance of all contracts funded and administered by the Tollway. The Tollway seeks to ensure non-discrimination in the award and administration of its contracts and associated subcontracts and that it is not a passive participant in a discriminatory marketplace; to create a level playing field on which DBEs can compete fairly for its contracts; to ensure that its Special Provision is narrowly tailored in accordance with applicable law; to ensure that only firms that meet the eligibility standards are permitted to participate as DBEs; and to help to remove barriers to participation of DBEs in Tollway contracts and associated subcontracts.

Consistent with this policy, it is the responsibility of all Contractors for general contracting work and a specific condition of all Tollway contracts to which they are parties to ensure full and fair opportunities for DBEs to compete in contracts funded and administered by the Tollway and to fully comply with this Special Provision.

## 2. DEFINITIONS

For the purposes of this Special Provision, the following terms shall have the following meanings:

*Affiliate* of a person or entity means a person or entity that directly or indirectly through one or more intermediaries, controls or is controlled by, or is under common control with, the person or entity. In determining Affiliation, the Tollway shall consider all appropriate factors, including common ownership, common management, and contractual relationships.

*Broker* means a person or entity that fills orders by purchasing or receiving supplies from a third party supplier rather than out of its own existing inventory and provides no substantial service other than acting as a conduit between his or her supplier and his or her customer.

*Commercially Useful Function* means responsibility for the execution of a distinct element of the work of the contract, which is carried out by actually performing, managing, and supervising the work involved, or fulfilling responsibilities as a Joint Venture partner.

*Contingency Work* is the anticipated work within the scope of the project which is included in the project to cover the work of such an uncertain nature that the location or quantity could not be identified prior to awarding the contract.

*Core Work* is the anticipated work within the scope of the project which is included in the project to cover the work of such a nature that the location and estimated quantity could be identified prior to awarding the contract.

*Disadvantaged Business Enterprise ("DBE")* means a business currently certified by the Illinois Unified Certification Program ("ILUCP") pursuant to 49 C.F.R. Part 26, or a business currently certified by the City of Chicago, Illinois or the County of Cook, Illinois, as a Minority or Women-Owned Business ("M/WBE") pursuant to its M/WBE program for construction contracts, Art. IV, § 2-92-650, *et seq*, as amended, or a business currently certified by the U.S. Small Business Administration (SBA) pursuant to the Small Business Act as an SBA 8(a) business, owned and operated by a socially and economically disadvantaged person. A DBE is considered to have current certification if the firm is listed in the directory database of the pertinent certifying agency.

*DBE Joint Venture* means an association of two or more persons, or any combination of types of business enterprises and persons numbering two or more, proposing to perform as a single for profit business enterprise, in which each Joint Venture partner contributes property, capital, efforts, skill and knowledge, and in which the DBE is responsible for a distinct, clearly defined portion of the work of the project and whose share in the capital contribution, control, management, risks, and profits of the Joint Venture are equal to its ownership interest. Joint Ventures must have an agreement in writing specifying the terms and conditions of the relationships between the partners and their relationship, risks and responsibility under the contract.

*DBE Utilization Plan* means the list of currently certified DBEs that the Bidder commits will be utilized, including its own participation as a DBE, if applicable, in the scopes of the work and the dollar values or the percentages of the work to be performed pursuant to this solicitation and in conformance with this Special Provision.

*Good Faith Efforts* means actions undertaken by a Contractor to achieve a DBE contract goal, which, by their scope, intensity, and appropriateness to the objective, can reasonably be expected to fulfill the contract goal.

*Mobilization* means preparatory work and operations necessary for the movement of personnel, equipment and incidentals to the project site for the establishment of offices, buildings and other facilities necessary for work on the project and for all other work operations which must be performed or costs incurred when beginning work on the project.

*Regular Dealer* means a firm that owns, operates, or maintains a store, warehouse, or other establishment in which the materials, supplies, articles or equipment of the general character described by the specifications and required under the contract are bought, kept in stock, and regularly sold or leased to the public in the usual course of business. To be a Regular Dealer, the firm must be an established, regular business that engages, as its principal business and under its own name, in the purchase and sale or lease of the products in question. A firm may be a Regular Dealer in such bulk items as petroleum products, steel, cement, gravel, stone, or asphalt without owning, operating, or maintaining a place of business if the firm both owns and operates distribution equipment for the products. Any supplementing of a Regular Dealer's distribution equipment shall be by a long-term lease agreement and not on an *ad hoc* or contract-by-contract basis. Packagers, manufacturer representatives, or other persons who arrange or expedite transactions are not Regular Dealers.

## 3. CONTRACTOR ASSURANCE

The Contractor will assure that each of its employees and its subcontractors' employees associated with the contract shall not discriminate on the basis of any protected category identified by law in the performance of this contract. Failure by the Contractor to carry out these requirements is a material breach of this contract, which may result in the termination of this contract or such other remedy, as the Tollway deems appropriate.

## 4. DBE CONTRACT GOAL TO BE ACHIEVED BY THE CONTRACTOR

This contract includes a specific DBE utilization goal of **20.00%** of the Core Work of the contract. The goal reflects the estimated availability of DBEs to perform the scopes of work of this contract, including as a prime Contractor. Consequently, in addition to the other award criteria established for this contract, ISTHA will award this contract to a Bidder who either meets this goal or who demonstrates its good faith efforts to do so. The participation of DBEs will be calculated on the amount of the Core Work, not Contingency Work identified in the bid documents. **The Contractor's DBE commitment will be assessed for any and all Extra Work Orders (EWO) and Change Orders (CO) at the time such orders are issued.**

## 5. DBE, M/WBE and SBA 8(a) LOCATOR REFERENCES

Bidders should consult the Illinois Unified Certification Program ("ILUCP")DBE Directory as a reference source for DBEs and the City of Chicago, the County of Cook M/WBE directories as reference sources for M/WBEs in construction certified by the City of Chicago or the County of Cook, or the Small Business Administration SBA 8(a) directory for SBA 8(a)s

certified by the Small Business Administration. Only firms certified by the IL-UCP, the City of Chicago, the County of Cook, or the Small Business Administration **at the time of bid opening** are eligible to be considered for contract award to either meet the contract goal or establish the Bidder's good faith efforts to do so.

These directories are to be used as an informational source only. Certification does not mean that a firm is in any way prequalified to provide the products and/or services in its certification specialty. "Certification" means that the ILUCP, the City of Chicago, the County of Cook, or the Small Business Administration has determined, on the basis of information provided and the representations therein, that a business is a *bona fide* DBE. The ILUCP, the City of Chicago, the County of Cook or the Small Business Administration does not, as a result of listing, make any representation concerning the ability of any listed firm to perform work in the specialty listed. The Tollway does not, through its use of and referral to ILUCP DBE, the City of Chicago, the County of Cook MBE/WBE, and the Small Business Administration SBA 8(a) lists, make any representation concerning the ability of any listed firm to perform work in its certification specialty. The Bidder must conduct its own due diligence regarding the capabilities of certified firms to perform the work of the contract.

## 6. BIDDING PROCEDURES

Compliance with the bidding procedures of this Special Provision is required as provided in this Special Provision prior to the award of the contract. The failure of the as-read low Bidder to comply will render the bid non-responsive.

### 6.1 Submission of the Disadvantaged Business DBE Utilization Plan, DBE Form 2026

A Bidder must submit a Disadvantaged Business DBE Utilization Plan on ISTHA DBE Form 2026 **with the bid submission.**

The only exception to this requirement is the case where a prime Bidder is also a DBE, is certified to perform a portion of the contract work as indicated on the DBE's Certification submitted at time of bid, and will meet the DBE goal via a self-performance requirement on the contract greater than or equal to the DBE goal for the contract. If the Bidder is a DBE Joint Venture, each Joint Venture partner must provide the attestation to the DBE Utilization Plan, Form 2026.

Otherwise, if the DBE Utilization Plan is not submitted at time of bid, then the bid will be deemed non-responsive. If the bid is deemed non-responsive due to a failure to submit a DBE Utilization Plan or failure to comply with the bidding procedures set forth herein, ISTHA may elect to cause the forfeiture of the penal sum of the Bidder's bid guaranty, and may deny authorization to bid the project if re-advertised for bids.

The DBE Utilization Plan shall indicate that the Bidder either has obtained sufficient DBE participation commitments to meet the contract goal or demonstrate and document its good faith efforts to meet the goal. The DBE Utilization Plan will also require the name of each DBE firm proposed for use on the contract along with a brief scope of work and dollar amount to be assigned to the DBE. The DBE Utilization Plan shall further provide the name, telephone number, and email address of a responsible official of the Bidder designated for purposes of notification of DBE Utilization Plan approval or disapproval under the procedures of this Special Provision.

Any agreement between a Contractor and a DBE or other subcontractor in which the Contractor requires that the DBE not provide subcontracting quotations to other Contractors is prohibited.

### 6.2 Submission of the DBE Participation Commitment Statement, DBE Form 2025

The Utilization Plan must be supported by the submission of a detailed DBE Participation Commitment Statement, Form 2025, for each DBE proposed for the performance of work to achieve the contract goal by 5:00 p.m. of the fifth calendar day after email notification to the prime from the Tollway of low apparent Bidder status.

The submission of DBE Form 2025 should be via email to constructionbid@getipass.com.

In no case should a Contractor remove, replace, or reduce the commitment to a DBE listed in the initial Utilization Plan Form 2026 without prior written consent of ISTHA. Under no circumstances is the Bidder allowed to change the amount of the core bid submitted or any other documentation unrelated to this special provision.

The signatures on these forms must be original signatures. All elements of information indicated on Form 2025 must be provided, including but not limited to:

6.2.1 The name and address of each DBE to be used;

6.2.2 A full description, including pay item numbers for DBEs or associated pay items for trucking services, of the commercially useful function to be performed by each DBE. Descriptions such as "miscellaneous" and prices such as "lump sum" are not acceptable. Contingency Work must not be included under Pay Items and will not be approved toward DBE goal participation until such time that those pay items have been confirmed as required work of the contract.

6.2.3 Direct Allowance items will not be approved toward DBE participation in the DBE Utilization Plan.

6.2.4 Mobilization costs should be included in the cost of the pay item for which it is associated rather than as a separate pay item on the DBE Utilization Plan, DBE Form 2025 for DBE subcontractors.

6.2.5 If the DBE is the Prime Contractor, the Mobilization pay item may be approved toward DBE participation in the DBE Utilization Plan.

6.2.6 The price to be paid to each DBE for the identified work, specifically stating the quantity, unit price and total subcontract price for the work to be completed by the DBE. If partial pay items are to be performed by the DBE, the Form must indicate the portion of each item, a unit price where appropriate and the subcontract price amount;

6.2.7 A commitment statement signed by the Bidder and each DBE evidencing availability and intent to perform a commercially useful function on the project; and

6.2.8 If the Bidder is a joint venture comprised of DBEs and non-DBEs, the Plan must also include a clear identification of the portion of the work to be performed by the DBE joint venture partner(s).

6.2.9 If the Bidder is unable to meet the goal, it must demonstrate it made good faith efforts to do so, as described in this Special Provision and detailed in section 6.6 below.

6.2.10 The contract will not be awarded until the DBE Utilization Plan, including if applicable, the Bidder's good faith efforts to meet the goal, is approved by ISTHA. The DBE Utilization Plan will be approved if it demonstrates that DBEs will be used to perform a commercially useful function sufficient to meet the contract goal, or that the Bidder made sufficient good faith efforts, as defined in this Special Provision, to meet the goal.

### 6.3 Counting DBE Participation

The DBE Utilization Plan's DBE commitments represent work expected to be performed and paid for upon satisfactory completion. ISTHA is only able to count toward the achievement of the contract goal the value of payments made for the work actually performed by DBEs. The Tollway will count DBE participation, and the Contractor will receive credit towards meeting the DBE contract goal, as follows:

6.3.1 The entire amount of that portion of work that the DBE is certified to perform, as indicated on the DBEs Letter of Certification, and that is performed by the DBE's own forces either as the Contractor or a subcontractor shall be counted, including the cost of supplies and materials obtained by the DBE for the work of the contract, and supplies purchased or equipment leased by the DBE (except supplies and equipment the DBE purchases or leases from the prime Contractor or the prime Contractor's Affiliate). **Work that the DBE subcontracts to a non-DBE does not count toward the DBE goal.**

6.3.2 The entire amount of fees or commissions charged by a DBE for providing a *bona fide* service, such as professional, technical, consultant or managerial services, or for providing bonds or insurance specifically required for the performance of a contract, shall be counted, provided the fee is reasonable and not excessive as compared with fees customarily charged for similar services.

6.3.3 One hundred percent of the cost of trucking services utilized on the contract shall be counted, provided the DBE is responsible for the management and supervision of the entire trucking operation for which it is responsible. At least one truck owned, operated, licensed and insured by the DBE must be used on the contract. Credit will only be applied for trucking activity to and from the ISTHA job site. Credit will be given for the following: (1) the DBE may lease trucks from another DBE, including an owner-operator who is certified as a DBE. The DBE who leases trucks from another DBE receives credit for the total value of the transportation services the lessee DBE provides on the contract. (2) The DBE may also lease trucks from a non-DBE, including from an owner-operator. Goal credit will be limited to the value of the reasonable fee or commission received by the DBE for trucks that are leased from a non-DBE.

6.3.4 When a DBE performs as a participant in a Joint Venture, only the portion of the total dollar value of the contract equal to the distinct, clearly defined portion of the work of the Joint Venture's contract that is performed by the DBE with its own forces and for which it is separately at risk, shall be counted. A Joint Venture may also count the dollar value of work subcontracted to DBEs other than the DBE Joint Venture partner(s). Work performed by the forces of the non-DBE joint venture partner shall not be counted toward the DBE goal. The Tollway will evaluate the Joint Venture agreement, which must be submitted with the DBE Utilization Plan, for conformance with this Special Provision and eligibility for credit towards meeting the goal. The agreement must describe in detail the financial contribution of each partner; the list of personnel and equipment contributed and used by each partner; the responsibilities of each partner for each aspect of the joint venture; if applicable, the bonding capacity of each partner; if applicable, the prequalification status of each partner; the basis and distribution of all profits and losses; and any other elements deemed relevant by the Tollway.

6.3.5 One hundred percent of the cost of the materials obtained from a DBE Manufacturer, as that term is defined in 49 C.F.R. § 26.55(e) shall be counted towards the DBE contract goal. Sixty-percent of the cost of the materials or supplies obtained from a DBE Regular Dealer or Supplier, as those terms are defined in 49 C.F.R. § 26.55(e), shall be counted towards the DBE contract goal. One hundred percent of the fees or transportation charges for the delivery of materials or supplies required on a job site shall be counted towards the DBE contract goal only if the payment of such fees is a customary industry practice and are commensurate with fees customarily charged for similar services.

6.3.6 One hundred percent credit will be counted towards the DBE contract goal for the value of fees and commissions for the procurement of materials and supplies if the DBE is not a regular dealer or manufacturer, provided such fees or commissions are determined by the Tollway in its sole discretion to be reasonable and not excessive as compared with fees customarily allowed for similar services. No portion of the cost of the materials or supplies themselves shall be counted towards the contract goals.

6.3.7 If a firm's certification is revoked by its certifying agency during its performance on a contract, the dollar value of work performed under this contract with that firm after it has ceased to be certified shall not be counted.

If a DBE graduates from its respective certification program, based upon exceeding the firm size or personal net worth limitations after this contract is awarded, the firm's participation will be counted towards meeting the goal on this contract.

In determining achievement of the contract goal, the participation of a DBE shall not be counted until that amount has been paid to the DBE.

**6.4 Demonstrating Commercially Useful Function**

Only expenditures to a DBE that is performing a Commercially Useful Function shall be counted. To determine whether a DBE is performing a Commercially Useful Function, the Tollway will evaluate the amount of work subcontracted, industry practices, whether the amount the DBE is to be paid under the contract is commensurate with the work it is actually performing and other relevant factors. A DBE performs a commercially useful function when it is responsible for the execution of the work and is carrying out its responsibilities by actually performing, managing, and supervising the work involved.

6.4.1 To perform a commercially useful function, the DBE must be responsible, with respect to materials and supplies used on the contract, for negotiating price, determining quality and quantity, ordering the material, and installing (where applicable) and paying for the material itself.

6.4.2 A DBE does not perform a commercially useful function if its role is limited to that of an extra participant in a transaction, contract, or project through which funds are passed in order to obtain the appearance of DBE participation. In determining whether a DBE is such an extra participant, ISTHA will examine similar transactions, particularly those in which DBEs do not participate.

6.4.3 If a DBE does not perform or exercise responsibility for at least 30 percent of the total cost of its contract with its own work force, or the DBE subcontracts a greater portion of the work of a contract than would be expected on the basis of normal industry practice for the type of work involved, ISTHA will presume that the DBE is not performing a commercially useful function. When a DBE is presumed not to be performing a commercially useful function as provided in this section, the DBE and the Contractor may present evidence to rebut this presumption.

### 6.5 Extended Documentation Period for Low Apparent Bidders with a DBE Commitment Below the Advertised DBE Goal

Each Contractor identified as the low Bidder who has a DBE commitment less than the advertised DBE goal shall be allowed, upon email notification from the Tollway, an extended documentation period which will extend until 5:00 pm CT on the second business day after the day the notification is sent (e.g. if a Bidder is notified on Monday, extended documentation period concludes on Wednesday at 5pm). The extended documentation period allows Contractors solely to supplement their initial Utilization Plan to add DBE participation to meet the stated DBE participation goal or to demonstrate additional good faith efforts in obtaining DBE participation. The Contractor may take other action beyond any stated additional efforts in order to obtain additional DBE commitments. The Contractor shall submit an amended DBE Utilization Plan if additional DBE commitments to meet the contract goal are secured by the end of the extended documentation period. If additional DBE commitments sufficient to meet the advertised contract goal are not secured, the Contractor shall report the final good faith efforts made during the extended documentation period along with a request for a waiver pursuant to section 6.6 of this section. All additional efforts taken by the Bidder before and during the extended documentation period will be considered as part of the Contractor's good faith efforts.

The extended documentation period is intended to allow Contractors that have made a good faith effort to secure DBE participation an opportunity to meet the stated contract goal. Contractors are expected to have utilized good faith efforts in compiling their initial DBE Utilization Plan, and the DBE participation indicated in the initial DBE Utilization Plan should reflect the participation the Contractor could achieve through good faith efforts. The extended documentation period should not be used to secure significantly higher DBE participation only after being identified as the low Bidder. In no case should a Contractor remove, replace or reduce the commitment to a DBE listed in the initial Utilization Plan without prior written consent of ISTHA. Under no circumstances is the Bidder allowed to change the amount of the core bid submitted or any other documentation unrelated to this special provision. When ISTHA determines that a Contractor, either through a pattern of conduct or with respect to a single bid, has failed to discharge its good faith efforts obligations in this intended fashion, ISTHA, in its discretion, may reject the bid outright without allowing the Bidder to take advantage of the extended documentation period.

### 6.6 Good Faith Efforts Procedures

If the Bidder cannot obtain sufficient DBE commitments to meet the contract goal, the Bidder must document in the DBE Utilization Plan its good faith efforts to meet the goal, including any DBE participation secured as detailed in Form(s) 2025, using the Good Faith Efforts Contact Log and Checklist, DBE Form 2023. If the DBE contract goal was not achieved by a Bidder, the Bidder must submit its good faith efforts documentation, including the DBE Form 2023. Documentation submitted after bid opening, except as provided for in Section 6.5 above, will not be accepted or reviewed.

Demonstrating good faith efforts means that the Bidder must show that all necessary and reasonable steps were taken to achieve the contract goal. Necessary and reasonable steps are those that could reasonably be expected to obtain sufficient DBE participation. ISTHA will consider the quality, quantity and intensity of the kinds of efforts that the Bidder has made. Mere *pro forma* efforts are not good faith efforts; rather, the Bidder is expected to have taken those efforts that would be reasonably expected of a Bidder actively and aggressively trying to obtain DBE participation sufficient to meet the contract goal.

If ISTHA determines that the Contractor has made a good faith effort to secure the work commitment of DBEs to meet the contract goal, ISTHA will award the contract provided that the Bidder is otherwise eligible for award and award is in the Tollway's best interest.

The following is a list of types of action that ISTHA will consider as part of the evaluation of the Bidder's good faith efforts to obtain DBE participation. These listed factors are not intended to be a mandatory checklist and are not intended to be exhaustive. Other factors or efforts brought to the attention of ISTHA may be relevant in appropriate cases, and will be considered by ISTHA.

6.6.1 Soliciting through all reasonable and available means (*e.g.*, attendance at DBE Networking Sessions sponsored by ISTHA, pre-bid meetings, advertising and/or written notices) the interest of all DBEs that have the capability to perform the work of the contract. A list of certified DBEs in the trades considered to determine the contract goal may be provided by the Tollway, but should not be considered exhaustive, and other firms may be available for solicitation by the Bidder. The Bidder must solicit this interest within sufficient time to allow the DBEs to respond to the solicitation, but in any event, no later than 5 calendar days prior to the bid submission date. At least two methods of solicitation of DBEs must be used (*e.g.*, email and fax). The Bidder must determine with certainty if the DBEs are interested by taking appropriate steps to follow- up initial solicitations.

6.6.2 Selecting portions of the work to be performed by DBEs in order to increase the likelihood that the DBE goal will be achieved. This includes, where appropriate, breaking out contract work items into economically feasible units to facilitate DBE participation, even when the prime Contractor might otherwise prefer to perform these work items with its own forces.

6.6.3 Providing interested DBEs with adequate information about the plans, specifications, and requirements of the contract in a timely manner to assist them in responding to a solicitation.

6.6.4 Negotiating in good faith with interested DBEs.

6.6.4.1 Making a portion of the work available to DBE subcontractors and suppliers and to select those portions of the work or material needs consistent with the available DBE subcontractors and suppliers, so as to facilitate DBE participation. Evidence of such negotiation includes the names, addresses, e mail address and telephone numbers of DBEs that were considered; a description of the information provided regarding the plans and specifications for the work selected for subcontracting; and evidence as to why additional agreements could not be reached for DBEs to perform the work.

6.6.4.2 A Bidder using good business judgment would consider a number of factors in negotiating with subcontractors, including DBE subcontractors, and would take a firm's price and capabilities as well as contract goals into consideration. However, the fact that there may be some additional costs involved in finding and using DBEs is not in itself sufficient reason for a Bidder's failure to meet the contract DBE

goal, as long as such costs are reasonable. Also, the ability or desire of a prime Contractor to perform the work of a contract with its own organization does not relieve the Bidder of the responsibility to make good faith efforts. Prime Contractors are not, however, required to accept higher quotes from DBEs if the price difference is excessive or unreasonable.

6.6.5 Not rejecting DBEs as being unqualified without sound reasons based on a thorough investigation of their capabilities. The Contractor's standing within its industry, membership in specific groups, organizations, or associations and political or social affiliations are not legitimate causes for the rejection or non-solicitation of bids in the Contractor's efforts to meet the contract goal.

6.6.6 Making efforts to assist interested DBEs in obtaining bonding, lines of credit, or insurance as required by the Tollway or the Contractor.

6.6.7 Making efforts to assist interested DBEs in obtaining necessary equipment, supplies, materials, or related assistance or services.

6.6.8 Effectively using the services of available minority/women community organizations; minority/women contractors' groups; local, state, and Federal minority/women business assistance offices; and other organizations as allowed on a case-by-case basis to provide assistance in the recruitment and placement of DBEs.

In determining whether a Bidder made good faith efforts, ISTHA may take into account the performance of other Bidders in meeting the contract goal or of Bidders in meeting the goal on contracts of a similar nature. For example, when the apparent successful Bidder fails to meet the contract goal, but others meet it, ISTHA will review whether, with additional reasonable efforts, the apparent successful Bidder could have met the goal. If the apparent successful Bidder fails to meet the goal, but meets or exceeds the average DBE participation obtained by other Bidders, ISTHA may view this, in conjunction with other factors, as evidence of the apparent successful Bidder having made good faith efforts.

A Bidder that rejected a DBE based on price must provide to ISTHA all quotes received for the scope of work proposed by the DBE from all firms, including non-DBEs.

The Bidder may request administrative reconsideration of a pre-final determination on its DBE Utilization Plan adverse to the Bidder by filing a request within five working days after the notification date of the determination, by delivering the request to the Illinois State Toll Highway Authority, Diversity and Strategic Development Department, 2700 Ogden Avenue, Downers Grove, Illinois 60515-1703, DBE@getipass.com, (630) 241-6800 ext. 3204. Submission via e-mail is acceptable. Deposit of the request in the United States mail on or before the fifth business day shall not be deemed delivery. The pre-final determination shall become final if a request is not received within the five-day period.

A request may provide additional written documentation and/or argument concerning the issue of whether an adequate good faith effort was made to meet the contract goal. In addition, the request shall be considered consent by the Bidder to extend the time for award. The request will be forwarded to ISTHA's Chief of Diversity and Strategic Development. The Chief of Diversity and Strategic Development may extend an opportunity to the Bidder to meet in person in order to consider all issues of whether the Bidder made a good faith effort to meet the goal. Such meeting shall extend the time for a decision. After the review by the Chief of Diversity and Strategic Development, the Bidder will be sent a written decision within 10 working days after receipt of the request for reconsideration or the date of the meeting, explaining the basis for finding that the Bidder did or did not meet the goal or make adequate good faith efforts to do so. A final decision by the Chief of Diversity and Strategic Development that a good faith effort was made shall approve the DBE Utilization Plan submitted by the Bidder and shall clear the contract for award. A final decision that a good faith effort was not made shall render the bid non-responsive. The administrative reconsideration procedures described in this section are not intended to allow a Bidder to have an additional opportunity to submit a new DBE Utilization Plan or evidence of additional good faith efforts performed after bid submission.

## 7. CONTRACT COMPLIANCE

### 7.1 Forms to be Submitted

All work indicated for performance by an approved DBE shall be performed, managed and supervised by the DBE executing the DBE Form 2025 - Participation Statement.

To receive a notice to proceed, the Contractor must submit for the Tollway's review signed subcontracts with all DBEs proposed to meet the goal within 20 calendar days of award.

A Contractor that seeks credit for the use of DBE trucking services must submit an affidavit attesting to compliance with this Special Provision for counting trucking costs on Form 2024. Form 2024 must be submitted when the contract is 25 percent, 50 percent, 75 percent and 100 percent completed. The Contractor must issue separate checks to trucking firms for each Tollway project by job number and associated pay item, not include multiple contracts on one payment.

### 7.2 Changes to the DBE Utilization Plan

The Contractor may not make changes to its contractual DBE commitments, substitute a DBE subcontractor or make any other changes to the DBE Utilization Plan without the prior written approval of the Tollway's Diversity and Strategic Development Department. Unauthorized changes or substitutions, including performing the work designated for a subcontractor with the Contractor's own forces, shall be a violation of this Special Provision and a breach of the contract.

If a Change Order or Extra Work order is issued by the Tollway or Contingency Work is authorized, the Contractor, in ISTHA's discretion, may be required to amend its DBE Utilization Plan to reflect the recalculated DBE dollars and any percentage change in the goal. The DBE contract goal may change in the Tollway's discretion to reflect a Change Order or Extra Work Order or the authorization of Contingency Work.

The facts supporting the request for changes to the DBE Utilization Plan must not have been known or reasonably could not have been known by the parties prior to entering into the subcontract. The Contractor must negotiate in good faith with the subcontractor to resolve the problem. If requested by either party, the Tollway shall facilitate such a meeting. Where there has been a mistake or disagreement about the scope of work, the DBE can be substituted only where agreement cannot be reached for a reasonable price or reasonable schedule for the correct scope of work.

Substitutions of a DBE subcontractor shall be permitted only under the following circumstances:

7.2.1 Unavailability after receipt of reasonable notice to proceed;

7.2.2 Failure of performance;

7.2.3 Financial incapacity;

7.2.4 Refusal by the subcontractor to honor the bid or bid price or scope or schedule;

7.2.5 Material mistake of fact or law about the elements of the scope of work of a solicitation where a reasonable price cannot be agreed;

7.2.6 Failure of the subcontractor to meet insurance, licensing or bonding requirements;

7.2.7 The subcontractor's withdrawal of its bid or bid; or

7.2.8 Decertification of the subcontractor as a DBE, other than on the basis of its exceeding firm size or personal net worth limits.

If it becomes necessary to substitute a DBE or otherwise change the DBE Utilization Plan, the Contractor must notify the Diversity and Strategic Development Department in writing of the request to substitute a DBE or otherwise change the DBE Utilization Plan. The request must state specific reasons for the substitution or change. A letter from the DBE to be substituted or affected by the change stating that it cannot perform on the contract or that it agrees with the change in its scope of work must be submitted with the request. Any refusal by the DBE to provide such a letter must be documented by the Contractor. The Diversity and Strategic Development Department will approve or deny a request for substitution or other change in the DBE Utilization Plan in writing within 5 working days of receipt of the request.

Where the Contractor has established the basis for the substitution to the Tollway's satisfaction, it must make good faith efforts to meet the contract goal by substituting a DBE subcontractor. Documentation of a replacement DBE, or of good faith efforts, must meet the requirements in Section 6.6 If the contract goal cannot be reached and good faith efforts have been made, the Contractor may substitute with a non-DBE.

If the Contractor plans to hire a subcontractor for any scope of work that was not previously disclosed in the DBE Utilization Plan, the Contractor must obtain the approval of the Diversity and Strategic Development Department to modify the DBE Utilization Plan and must make good faith efforts to ensure that DBEs have a fair opportunity to bid on the new scope of work.

A new subcontract, a new Form 2025 for the substituted DBE (if applicable) and an amended DBE Utilization Plan must be executed and submitted to the Diversity and Strategic Development Department within 5 working days of the Contractor's receipt of the Tollway's approval for the substitution or other change.

### 7.3 The submission of the DBE Payment Report

Form 2114, the DBE Payment Report, or such other form or format as specified by the Tollway, must be submitted as specified in the DBE Form 2114 instructions. Payment will not be accepted nor processed without a completed DBE Form 2114 as part of its submission as required.

The Contractor shall maintain a record of payments to DBEs and all other subcontractors and suppliers for work performed. The records shall be made available to ISTHA for inspection and copying upon request. After the performance of the final item of work or delivery of material by a DBE and final payment to the DBE by the Contractor, but not later than thirty (30) calendar days after payment has been made by ISTHA to the Contractor for such work or material, the Contractor shall submit a DBE Final Payment Report on ISTHA DBE Form 2115, or such other form or format as specified by the Tollway, to the Construction Manager. If full and final payment has not been made to the DBE, the Report shall indicate whether a disagreement concerning the final payment exists between the Contractor and the DBE or if the Contractor believes that the DBE's work has not been satisfactorily completed.

ISTHA reserves the right to withhold payment to the Contractor to enforce the provisions of this Special Provision. Final payment, including retention, shall not be made on the contract until such time as the Contractor submits DBE Form 2115, or such other form or format as specified by the Tollway, in accordance with this Special Provision or as otherwise directed by the Tollway.

## 8. SANCTIONS

The Tollway will periodically review the Contractor's compliance with this Special Provision and the terms of its contract with the Contractor, including the DBE Utilization Plan. Without limitation, the Contractor's failure to comply with this Special Provision or its DBE Utilization Plan, failure to cooperate in providing information regarding its compliance with this Special Provision or its DBE Utilization Plan, or provision of false or misleading information or statements concerning compliance, certification status of DBEs, good faith efforts or any other material fact or representation shall constitute a material breach of this contract and may result in damages to the Tollway. Such breach or damages entitle the Tollway

to declare a default, terminate the contract, impose liquidated damages or exercise those remedies provided for in the contract or at law or in equity.

Sanctions may include, but are not limited to, monetary sanctions, including non-release of retainage; the monetary cost of audits resulting in findings of noncompliance; liquidated damages based on the damage to the Tollway from the Contractor's lack of good faith efforts and failure to meet the other requirements of this Special Provision in an amount up to the monetary difference between the amount committed to by the Contractor in its DBE Utilization Plan and the amount actually paid to DBEs; deeming the Contractor non-responsible with respect to future business with the Tollway; and any other sanctions as are permitted by law.

In imposing sanctions, the Tollway will consider the *bona fide* efforts of the Contractor to meet the DBE goal, its history of good faith efforts on other Tollway contracts, the size of the contract, the degree to which the Contractor fell below the DBE goal, and other factors deemed relevant by the Tollway.

The Contractor may appeal the decision to impose sanctions within 5 working days of its receipt of the written decision by filing an appeal in hard copy or electronic format with the Illinois State Toll Highway Authority's Sanctions Committee. Actual delivery of the hard copy and electronic formats within the 5 business days is required and mere posting by mail within that period is not sufficient. An appeal may provide additional documentation and/or arguments and request an oral presentation to the Tollway's Sanctions Committee. The Tollway's Sanctions Committee shall notify the Contractor in writing of the final determination and the basis for the determination within 10 working days after receipt of the appeal or after the date of the oral presentation by the Contractor, whichever is later. The Contractor may appeal an adverse decision within 5 working days of receipt of the final determination to the Executive Director by filing an appeal in hard copy and electronic format to the Illinois State Toll Highway Authority, Executive Director, 2700 Ogden Avenue, Downers Grove, Illinois 60515-1703, DBE@getipass.com. The Executive Director or his/her designee, which designee shall not be employed within the Tollway's Diversity Department, may solicit information from the Contractor, the Diversity and Strategic Development Department, the Chief of Diversity and Strategic Development, the Law Department, Internal Audit, the Procurement Department, and anyone else in his/her discretion, and shall render a final decision on the Contractor's appeal within 30 calendar days

## 9. INACCURATE OR FRAUDULENT REPORTING

The Contractor has a duty to accurately report information pursuant to this Special Provision. A Contractor who fails to supply accurate information is subject to sanctions imposed by the Tollway. A Contractor who intentionally supplies inaccurate information may be subject to civil and/or criminal sanctions.

## 10. OTHER REGULATIONS

The adherence to the DBE goal does not abrogate other responsibilities of the Contractor to comply with affirmative action requirements under federal or state law, municipal ordinance, prevailing government regulations or terms contained elsewhere in the Contract.

ILLINOIS STATE TOLL HIGHWAY AUTHORITY
DBE FORM 2026 - UTILIZATION PLAN

PRIME CONTRACTOR:_____
CONTACT NAME:_____
CONTACT PHONE NUMBER:_____
CONTACT E-MAIL:_____

CONTRACT NUMBER_____

Check one:

☐ Contractor will meet or exceed the DBE Contract Goal and will provide Disadvantaged Business Participation as presented below.

☐ Contractor will meet or exceed the DBE Contract Goal because PRIME BIDDER IS A DBE.

☐ Contractor requests a waiver of the DBE Contract Goal.

The Bidder is requesting the contract Goal be accordingly modified or waived. Attached is all information required by the Special Provision in support of this request, including Good Faith Efforts - Form 2023.

DOLLAR AMOUNT OF WAIVER REQUEST:_____

PERCENTAGE OF WAIVER REQUEST: _____

Instructions to Bidders:

1. Bidders are required to comply with the Special Provision.
2. Submit only one DBE Utilization Plan for each Project.
3. This Utilization Plan, Form 2026 must:
   --be submitted with the bid or the bid may be deemed non-responsive
   --be an accurate representation of work and pricing agreed upon between the prime and the DBE firm prior to bid submission
4. The Participation Statement(s) (DBE Form 2025), with original signatures, pay item description and pricing are to be submitted to Tollway Diversity at constructionbid@getipass.com by 5 p.m. on the fifth calendar day after notification to the prime by the Tollway of apparent low Bidder status
5. Each company listed on the Utilization Plan and subsequent Participation Statement must be listed in a certifying agency's database as stipulated in the Special Provision at the time of bid submission to be considered acceptable for DBE credit
6. In no case should a Contractor remove, replace or reduce the commitment to a DBE listed in the initial Utilization Plan on the Participation Statement without prior written consent of ISTHA. Under no circumstances is the Bidder allowed to change the amount of the core bid submitted or any other documentation unrelated to this special provision.

**DBE UTILIZATION PLAN**

| DBE Firm Name | Scope of Work<br>Brief description of overall work to be performed | DBE - Amount ($)<br>If supplier, enter 60% credit amount. |
|---|---|---|
| | | |
| | | |
| | | |
| | | |
| | | |
| | | |
| | | |
| | | |
| | | |
| | | |
| | | |
| | TOTAL | |

For ebid: the submission of Form 2026 constitutes signature of this form.
For hardcopy: signature required.
Form 2026 - 03/2018

_____
Signature

Date: 6/25/2019

To: Contact Name: Tim Polk

Contractor Company Name: Walsh Construction Company II, LLC

From: Deanna Dinkel

DBE Project Specialist

*Please note in accordance with the Procurement code (30 ILCS 500), section 50-11 prohibits a person from entering into a contract with a State agency, or entering into a sub-contract, if it, or any affiliate, is delinquent in the payment of any debt to the State, unless the person or affiliate has entered into a deferred payment plan to pay off the debt. (Procurement reform bill can be referenced on the Illinois Tollway website)*

Subject: **DBE Plan Review** **Date Original Plan Submitted:** 6/25/2019 **Revision #** 1

**Contract #** I-18-4428 **Established DBE Goal:** 20.00 %

**Contract Description:** Bridge Reconstruction (BN 261) - Burlington Northern Santa Fe Railway (BNSF) over the Tri-State Tollway (I-294) - Mile Post 26.6

[ X ] Contractor's plan as submitted meets the established DBE goal for this contract

* Notes: Jamart Enterprises is removed from the DBE Plan at this time due to deliquent debt. DCH Construction is increased from $375,000 to $450,000. *

**DBE Plan as Submitted by apparent low bidder:**

**Core Bid Amount** **$56,402,869.87**

| D/M/WBE Firm Name | Status (SB/Sup/TK) | Type | Scope | Contract Amount | Credit Amount | Credit % | Certifying Agency | Gender | Ethnicity |
|---|---|---|---|---|---|---|---|---|---|
| Alpine Demolition Services, LLC | SB | D/WBE | Demolition | $954,525.20 | $954,525.20 | 1.69 % | City of Chicago | F | Caucasian |
| Archon Construction Co Inc | SB | WBE | Drainage | $2,557,190.78 | $2,557,190.78 | 4.53 % | City of Chicago | F | Caucasian |
| Area Equipment, Inc. | SB | D/WBE | Structural steel | $3,202,411.40 | $3,202,411.40 | 5.67 % | City of Chicago | F | Caucasian |
| BarTech Group | SB | DBE | Electrical work | $649,500.00 | $649,500.00 | 1.15 % | IDOT | M | African American |
| C.R. Schmidt, Inc. | SB | DBE/WBE | Block wall | $164,304.00 | $164,304.00 | 0.29 % | City of Chicago | F | Caucasian |
| City Lights, Ltd. | SB | DBE/WBE | Electrical work | $210,155.40 | $210,155.40 | 0.37 % | City of Chicago | F | Asian Indian |
| DCH Construction & Hauling, LLC | Trucker | D/W/MBE | Trucking | $450,000.00 | $450,000.00 | 0.79 % | IDOT | F | Hispanic |
| Divine Cement Inc. | SB | D/MBE | Concrete work | $313,589.68 | $313,589.68 | 0.55 % | City of Chicago | M | African American |
| Everlights Inc | Supplier | D/WBE | Electrical supply | $104,397.77 | $62,638.66 | 0.11 % | City of Chicago | F | Caucasian |
| J Ave Development Inc. | Trucker | D/MBE | Trucking | $337,798.00 | $337,798.00 | 0.59 % | IDOT | M | Hispanic |
| La Grange Crane Service, Inc. | SB | D/WBE | Crane services | $74,570.00 | $74,570.00 | 0.13 % | City of Chicago | F | Caucasian |
| Lotus Options, Inc. | SB | DBE | Painting | $341,896.20 | $341,896.20 | 0.60 % | IDOT | M | Hispanic |
| Maintenance Coatings Co. | SB | D/WBE | Pavement markings/MOT | $144,590.80 | $144,590.80 | 0.25 % | City of Chicago | F | Caucasian |
| Natural Creations Landscaping, Inc. | SB | D/MBE | Landscaping | $564,044.41 | $564,044.41 | 1.00 % | City of Chicago | M | Hispanic |
| Pine Waterproofing and Sealant, Inc. | SB | D/WBE | Waterproofing | $460,073.00 | $460,073.00 | 0.81 % | City of Chicago | F | Caucasian |
| R A Seaton Contractor Services, LLC | Trucker | DBE | Trucking | $179,868.71 | $179,868.71 | 0.31 % | IDOT | F | Caucasian |
| Sanco Traffic Control | SB | DBE | Pavement markings | $99,767.85 | $99,767.85 | 0.17 % | IDOT | M | Hispanic |

| | | | | | | | | | |
|---|---|---|---|---|---|---|---|---|---|
| VMR Contracting Inc. | SB | D/MBE | Rebar installation | $511,750.78 | $511,750.78 | 0.90 % | IDOT | M | African American |
| **Total # of subcontracts: 18** | | | **TOTAL** | **$11,320,433.98** | **$11,278,674.87** | **19.99 %** | | | |
| **Total # of subcontractors: 18** | | | **Total %** | **20.07 %** | **20.00%** | | | | |

August 6, 2019

WALSH Ltr. 219091-001

Mr. Mike Wicks
Illinois Tollway
2700 Ogden Ave
Downers Grove, IL 60515

Attn: Demico Cole, P.E.
Resident Engineer - TranSystems

Re: **Subcontractor Delinquent Debt**
Contract I-18-4428, Cook/DuPage County
Bridge Construction - BNSF Railway over I-294
Walsh Project No. 219091

Dear Mr. Cole,

Walsh Construction Company II, LLC (Walsh) is in receipt of the Illinois Tollway's (Tollway) email correspondence received July 9, 2019 titled "Delinquent Debt". Based on receipt, Walsh took immediate action to rectify all open debts associated with our planned subcontractor's.

Since this initial notification from the Tollway, Walsh has actively worked to get a final resolution from Jamart Enterprises, one of our planned DBE trucking subcontractors, on resolving their open debt with the State of Illinois. Jamart has been working diligently with the Illinois Department of Revenue to clear this debt, but a quick resolution to this matter seems unlikely.

In order to avoid delay to the start of this project and allow for the issuance of a Notice to Proceed, Walsh is willing to assume financial responsibility for the current delinquent debt received in the notification as of July 9, 2019. We will continue to work with Jamart Enterprises to properly clear this issue with the state and will not allow Jamart to perform any work on this project until a time that is has been cleared of this issue by the state. As you are aware, prior to the commencement of work on the Project by any subcontractors, an A-15 must be submitted and approved. Please accept this additional assurance that no delinquent subcontractors will perform work on the Project.

Alternatively, Jamart has offered that they be removed from the Project to allow for the timely commencement of work. While this is an option available, Walsh would prefer a conditional notice to proceed in order to allow Jamart additional time to resolve this delinquent debt. Walsh does not anticipate work by Jamart on the Project for several months, or potentially 2020.

Please do not hesitate to contact me with any questions or concerns.

Sincerely,
Walsh Construction Company II, LLC

[redacted]

Brian Fidoruk

929 West Adams Street, Chicago Illinois 60607
P 312.563.5400 F 312.563.5467 www.walshgroup.com
An Equal Opportunity Employer

Project Manager

cc: P. Griffith
Field File 1.1a

Date: 6/25/2019

To: Contact Name: Tim Polk

Contractor Company Name: Walsh Construction Company II, LLC

From Deanna Dinkel

DBE Project Specialist

*Please note in accordance with the Procurement code (30 ILCS 500), section 50-11 prohibits a person from entering into a contract with a State agency, or entering into a sub-contract, if it, or any affiliate, is delinquent in the payment of any debt to the State, unless the person or affiliate has entered into a deferred payment plan to pay off the debt. (Procurement reform bill can be referenced on the Illinois Tollway website)*

Subject: **DBE Plan Review** **Date Original Plan Submitted:** 6/25/2019 **Revision #** 0

**Contract #** I-18-4428 **Established DBE Goal:** 20.00 %

**Contract Description:** Bridge Reconstruction (BN 261) - Burlington Northern Santa Fe Railway (BNSF) over the Tri-State Tollway (I-294) - Mile Post 26.6

[ X ] Contractor's plan as submitted meets the established DBE goal for this contract

Notes:

**DBE Plan as Submitted by apparent low bidder:**

**Core Bid Amount** **$56,402,869.87**

| D/M/WBE Firm Name | Status (SB/Sup/TK) | Type | Scope | Contract Amount | Credit Amount | Credit % | Certifying Agency | Gender | Ethnicity |
|---|---|---|---|---|---|---|---|---|---|
| Alpine Demolition Services, LLC | SB | D/WBE | Demolition | $954,525.20 | $954,525.20 | 1.69 % | City of Chicago | F | Caucasian |
| Archon Construction Co Inc | SB | WBE | Drainage | $2,557,190.78 | $2,557,190.78 | 4.53 % | City of Chicago | F | Caucasian |
| Area Equipment, Inc. | SB | D/WBE | Structural steel | $3,202,411.40 | $3,202,411.40 | 5.67 % | City of Chicago | F | Caucasian |
| BarTech Group | SB | DBE | Electrical work | $649,500.00 | $649,500.00 | 1.15 % | IDOT | M | African American |
| C.R. Schmidt, Inc. | SB | DBE/WBE | Block wall | $164,304.00 | $164,304.00 | 0.29 % | City of Chicago | F | Caucasian |
| City Lights, Ltd. | SB | DBE/WBE | Electrical work | $210,155.40 | $210,155.40 | 0.37 % | City of Chicago | F | Asian Indian |
| DCH Construction & Hauling, LLC | Trucker | D/W/MBE | Trucking | $375,000.00 | $375,000.00 | 0.66 % | IDOT | F | Hispanic |
| Divine Cement Inc. | SB | D/MBE | Concrete work | $313,589.68 | $313,589.68 | 0.55 % | City of Chicago | M | African American |
| Everlights Inc | Supplier | D/WBE | Electrical supply | $104,397.77 | $62,638.66 | 0.11 % | City of Chicago | F | Caucasian |
| J Ave Development Inc. | Trucker | D/MBE | Trucking | $337,798.00 | $337,798.00 | 0.59 % | IDOT | M | Hispanic |
| Jamart Enterprises Inc. | Trucker | DBE | Trucking | $200,000.00 | $200,000.00 | 0.35 % | IDOT | M | Hispanic |
| La Grange Crane Service, Inc. | SB | D/WBE | Crane services | $74,570.00 | $74,570.00 | 0.13 % | City of Chicago | F | Caucasian |
| Lotus Options, Inc. | SB | DBE | Painting | $341,896.20 | $341,896.20 | 0.60 % | IDOT | M | Hispanic |
| Maintenance Coatings Co. | SB | D/WBE | Pavement markings/MOT | $144,590.80 | $144,590.80 | 0.25 % | City of Chicago | F | Caucasian |
| Natural Creations Landscaping, Inc. | SB | D/MBE | Landscaping | $564,044.41 | $564,044.41 | 1.00 % | City of Chicago | M | Hispanic |
| Pine Waterproofing and Sealant, Inc. | SB | D/WBE | Waterproofing | $460,073.00 | $460,073.00 | 0.81 % | City of Chicago | F | Caucasian |
| R A Seaton Contractor Services, LLC | Trucker | DBE | Trucking | $179,868.71 | $179,868.71 | 0.31 % | IDOT | F | Caucasian |

| | | | | | | | | | |
|---|---|---|---|---|---|---|---|---|---|
| Sanco Traffic Control | SB | DBE | Pavement markings | $99,767.85 | $99,767.85 | 0.17 % | IDOT | M | Hispanic |
| VMR Contracting Inc. | SB | D/MBE | Rebar installation | $511,750.78 | $511,750.78 | 0.90 % | IDOT | M | African American |
| **Total # of subcontracts: 19** | | | **TOTAL** | **$11,445,433.98** | **$11,403,674.87** | **20.21 %** | | | |
| **Total # of subcontractors: 19** | | | **Total %** | **20.29 %** | **20.21 %** | | | | |

ILLINOIS STATE TOLL HIGHWAY AUTHORITY
DBE FORM 2026 - UTILIZATION PLAN

PRIME CONTRACTOR: Walsh Construction Company II, LLC
CONTACT NAME: Tim Polk
CONTACT PHONE NUMBER: 312.563.5400
CONTACT E-MAIL: tpolk@walshgroup.com

CONTRACT NUMBER I-18-4428

Check one:

☒ Contractor will meet or exceed the DBE Contract Goal and will provide Disadvantaged Business Participation as presented below.

☐ Contractor will meet or exceed the DBE Contract Goal because PRIME BIDDER IS A DBE

☐ Contractor requests a waiver of the DBE Contract Goal.

The Bidder is requesting the contract Goal be accordingly modified or waived. Attached is all information required by the Special Provision in support of this request, including Good Faith Efforts - Form 2023.

DOLLAR AMOUNT OF WAIVER REQUEST: _____

PERCENTAGE OF WAIVER REQUEST: _____

Instructions to Bidders:

1. Bidders are required to comply with the Special Provision
2. Submit only one DBE Utilization Plan for each Project.
3. This Utilization Plan, Form 2026 must:
   --be submitted with the bid or the bid may be deemed non-responsive
   --be an accurate representation of work and pricing agreed upon between the prime and the DBE firm prior to bid submission
4. The Participation Statement(s) (DBE Form 2025), with original signatures, pay item description and pricing are to be submitted to Tollway Diversity at constructionbid@getipass.com by 5 p.m. on the fifth calendar day after notification to the prime by the Tollway of apparent low Bidder status
5. Each company listed on the Utilization Plan and subsequent Participation Statement must be listed in a certifying agency's database as stipulated in the Special Provision at the time of bid submission to be considered acceptable for DBE credit
6. In no case should a Contractor remove, replace or reduce the commitment to a DBE listed in the initial Utilization Plan on the Participation Statement without prior written consent of ISTHA. Under no circumstances is the Bidder allowed to change the amount of the core bid submitted or any other documentation unrelated to this special provision.

**DBE UTILIZATION PLAN**

| DBE Firm Name | Scope of Work<br>Brief description of overall work to be performed | DBE - Amount ($)<br>If supplier, enter 60% credit amount. |
|---|---|---|
| VMR Contractors, Inc. | Rebar Installation | $ 511,750.78 |
| Alpine Demolition Services LLC | Demolition | $ 954,525.20 |
| Divine Cement Inc | Concrete Flatwork | $ 313,589.68 |
| Avchon Construction Co, Inc | Drainage & Water Main | $ 2,557,190.78 |
| The Bartech Group (ECC) | Electrical Work | $ 649,500.00 |
| Everlights Inc (ECC) | Electrical Work | $ 62,638.66 |
| City Lights, Ltd (ECC) | Electrical Work | $ 210,155.40 |
| LA Grange Crane Service | Crane Rental | $ 74,570.00 |
| Maintenance Coatings Co. (TSI) | Pvmt Marking & Traffic Coat | $ 144,590.80 |
| Natural Creations Landscaping Inc | Landscaping | $ 564,044.41 |
| Lotus Options Inc | Painting | $ 341,896.20 |
| | TOTAL | NEXT PAGE → |

For ebid: the submission of Form 2026 constitutes signature of this form
For hardcopy: signature required
Form 2026 - 03/2018

[redacted]

Signature

ILLINOIS STATE TOLL HIGHWAY AUTHORITY
DBE FORM 2026 - UTILIZATION PLAN

PRIME CONTRACTOR: Walsh Construction Company II, LLC
CONTACT NAME: Tim Polk
CONTACT PHONE NUMBER: 312.563.5400
CONTACT E-MAIL: tpolk@walshgroup.com

CONTRACT NUMBER I-18-4428

Check one:

☒ Contractor will meet or exceed the DBE Contract Goal and will provide Disadvantaged Business Participation as presented below.

☐ Contractor will meet or exceed the DBE Contract Goal because PRIME BIDDER IS A DBE.

☐ Contractor requests a waiver of the DBE Contract Goal.

The Bidder is requesting the contract Goal be accordingly modified or waived. Attached is all information required by the Special Provision in support of this request, including Good Faith Efforts - Form 2023.

DOLLAR AMOUNT OF WAIVER REQUEST: _____

PERCENTAGE OF WAIVER REQUEST: _____

Instructions to Bidders:

1. Bidders are required to comply with the Special Provision
2. Submit only one DBE Utilization Plan for each Project
3. This Utilization Plan, Form 2026 must:
   --be submitted with the bid or the bid may be deemed non-responsive
   --be an accurate representation of work and pricing agreed upon between the prime and the DBE firm prior to bid submission
4. The Participation Statement(s) (DBE Form 2025) with original signatures, pay item description and pricing are to be submitted to Tollway Diversity at constructionbid@getipass.com by 5 p.m. on the fifth calendar day after notification to the prime by the Tollway of apparent low Bidder status
5. Each company listed on the Utilization Plan and subsequent Participation Statement must be listed in a certifying agency's database as stipulated in the Special Provision at the time of bid submission to be considered acceptable for DBE credit
6. In no case should a Contractor remove, replace or reduce the commitment to a DBE listed in the initial Utilization Plan on the Participation Statement without prior written consent of ISTHA. Under no circumstances is the Bidder allowed to change the amount of the core bid submitted or any other documentation unrelated to this special provision.

**DBE UTILIZATION PLAN**

| DBE Firm Name | Scope of Work<br>Brief description of overall work to be performed | DBE - Amount ($)<br>If supplier, enter 60% credit amount. |
|---|---|---|
| CR Schmidt Inc | Furnish/Install Block Wall | $ 164,304.00 |
| Sanco Inc (TSI) | Traffic Control | $ 99,767.85 |
| Pine Waterproofing & Sealant Inc | Waterproofing Furn/Install | $ 460,073.00 |
| ~~Jamart Enterprises Inc~~ | ~~Misc Trucking~~ | ~~$200,000.00~~ |
| RA Seaton Contractor Services LLC | Misc Trucking | $ 179,868.71 |
| ~~[illegible]~~ | ~~[illegible]~~ | ~~[illegible]~~ |
| D/H Construction & Hauling LLC | Misc Trucking | $ 375,000.00 |
| J. Ave Development Inc | Misc Trucking | $ 337,798.00 |
| | | |
| Area Equipment Inc | Beam Erection | $3,202,411.40 |
| | | |
| | TOTAL | $11,403,674.87 |

For ebid: the submission of Form 2026 constitutes signature of this form. -->
For hardcopy: signature required.
Form 2026 - 03/2018

[redacted]
Signature

**ILLINOIS STATE TOLL HIGHWAY AUTHORITY**
**VOSB FORM 2026 - UTILIZATION PLAN**

**PRIME CONTRACTOR:** Walsh Construction Company II, LLC
**CONTACT NAME:** Tim Polk
**CONTACT PHONE NUMBER:** 312 563 5400
**CONTACT E-MAIL:** tpolk@walshgroup.com

**CONTRACT NUMBER** I-18-4428

Check one:

☒ Contractor will meet or exceed the VOSB Contract Goal and will provide Veteran Owned Small Business Participation as presented below.

☐ Contractor will meet or exceed the VOSB Contract Goal because PRIME BIDDER IS A VOSB.

☐ Contractor requests a waiver of the VOSB Contract Goal.

The Bidder is requesting the contract Goal be accordingly modified or waived. Attached is all information required by the Veteran Small Business Participation and Utilization Plan-Construction in support of this request, including Good Faith Efforts - Form 2023.

DOLLAR AMOUNT OF WAIVER REQUEST: _____

PERCENTAGE OF WAIVER REQUEST: _____

Instructions to Bidders:

1. Bidders are required to comply with the Veteran Small Business Participation and Utilization Plan - Construction
2. Submit only one Veteran Utilization Plan for each Project
3. This Utilization Plan, Form 2026 must:
   --be submitted with the bid or the bid may be deemed non-responsive
   --be an accurate representation of work and pricing agreed upon between the prime and the Veteran firm prior to bid submission
4. The Participation Statement(s) (VOSB Form 2025), with original signatures, pay item description and pricing are to be submitted to Tollway Diversity at constructionbid@getipass.com by 5 p.m. on the fifth calendar day after notification to the prime by the Tollway of apparent low Bidder status
5. Each company listed on the Utilization Plan and subsequent Participation Statement must be listed in a certifying agency's database as stipulated in the Special Provision at the time of bid submission to be considered acceptable for Veteran credit.
6. In no case should a Contractor remove, replace or reduce the commitment to a Veteran firm listed in the initial Utilization Plan on the Participation Statement without prior written consent of ISTHA. Under no circumstances is the Bidder allowed to change the amount of the core bid submitted or any other documentation unrelated to this special provision

**VOSB UTILIZATION PLAN**

| VOSB Firm Name | Scope of Work<br>Brief description of overall work to be performed | VOSB - Amount ($)<br>If supplier, enter 60% credit amount. |
|---|---|---|
| | | |
| Industrial Fence Inc | Fence & Guardwall | $ 1,149,079.60 |
| | | |
| | | |
| | | |
| | | |
| | | |
| | | |
| | | |
| | | |
| | TOTAL | $ 1,149,079.60 |

For ebid: the submission of Form 2026 constitutes signature of this form
For hardcopy: signature required

[redacted]
Signature

Form 2026 - 03/2018

*Illinois State Toll Highway Authority "ISTHA"*

**DBE FORM 2025 - DBE PARTICIPATION STATEMENT FORM, PART 2/2**

| CONTRACT # | I-18-4428 |
|---|---|

| DBE FIRM NAME: | VMR Contractors, Inc. |
|---|---|
| CIRCLE ALL THAT APPLY: | DBE MBE WBE SBA 8(A) |

| CHECK ALL THAT APPLY: |
|---|
| PRIME ____ JV PARTNER ____ SUBCONTRACTOR ✓ TRUCKER ____ SUPPLIER ____ MANUFACTURER ____ |

| SUBCONTRACTOR: | TIER 1 (SUB TO PRIME): Y N | TIER 2 OR BELOW: Y N | UNDER CONTRACT TO: |
|---|---|---|---|

This form must be completed for EACH disadvantaged business participating in the DBE Utilization Plan.
Attach this form to the DBE Utilization Plan form, DBE Form 2026. If additional space is needed, complete an additional form(s) for the firm or attach a spreadsheet on DBE FIRM letterhead

| PAY ITEM NO. * | DESCRIPTION: Indicate whether furnish only, or both furnish and install. | QUANTITY | UNIT PRICE | TOTAL CONTRACT AMOUNT ($) | CHECK IF SUPPLIER | TOTAL DBE CREDIT AMOUNT ($) (reduce to 60% of contract amount if firm is a SUPPLIER) |
|---|---|---|---|---|---|---|
| 50800105 | Install Reinforcement Bars | 515,000 | $ 59 | $ 303,850 00 | | |
| 50800205 | Install Reinforcement Bars, Epoxy Coated | 328,372 | $.59 | $ 193,739.48 | | |
| 50800515 | Install Bar Splicers | 193 | $27.00 | $ 5,211.00 | | |
| JI602791 | Junction Chamber, Location 1 (Partial Item) | 1 | $8,950.30 | $ 8,950.30 | | |
| | | | | | | |
| | | | TOTALS FOR THIS DBE FIRM: | $ 511,750.78 | | |

*Contingency Work must not be included under Pay Items and will not be approved toward DBE goal participation until such time as those Pay Items have been confirmed as required work of the contract. Direct Allowance Items and/or Mobilization Item NJS671010, will not be approved within the DBE Utilization Plan for DBE subcontractors but credit may be allowed if performed as part of specific pay item(s) during contract execution Reference Sections II, VI.A.2 and VI.B 1 of the Special provision for DBE Participation NOTE that these items are not included in the determination of the DBE Goal percentage

**1. PARTIAL PAY ITEMS**: For any of the above ITEMS that are partial pay items, specifically describe the work and subcontract dollar amoun

**2. COMMITMENT:** The undersigned certify that the information herein is true and correct, and that the DBE listed below has agreed to perform a commercially-useful function in the work of the contract item(s) listed above and to execute a contract to that effect with the Prime Contractor. The undersigned further understand that NO CHANGES to the type or scope of work performed by the DBE may be made without PRIOR WRITTEN APPROVAL and that complete and accurate information regarding actual work performed by the DBE on this contract and the payment thereto must be provided to ISTHA's Department of Diversity and Strategic Development. **The Prime Contractor will not assign any of the contract items listed above to a firm other than the DBE identified below without ISTHA's prior written approval. The Prime Contractor must request, in writing, approval by ISTHA's Diversity and Strategic Development Department of any proposed amendment to the type or scope of work to be performed by the DBE** no later than three business days from the date the Prime Contractor becomes aware of the circumstances supporting the request **Failure to receive written approval prior to a change in type or scope is a violation of the Special Provision for DBE Participation and can subject the contractor to contract sanctions.**

[redacted] Chief Estimator

Signature for Prime Contractor — Title

Date: 6/25/2019

Contact: Jim Pack

Phone: 312-563-5400

Firm Name: Walsh Construction Co II LLC

Address: 929 W. Adams Street, Chicago, IL 60607

[redacted] President

Signature for DBE Contractor — Title

Date: 6/24/2019

Contact: Vincent Roberson

Phone: (708) 574-7205

Firm Name: VMR Contractors Inc

Address: 16710 Richmond Avenue Suite 5 Hazel Crest, IL 60429

**Illinois Department of Transportation**
Office of Business & Workforce Diversity
2300 South Dirksen Parkway / Springfield, Illinois 62764

September 19, 2018

CERTIFIED-RETURN RECEIPT REQUESTED

Mr. Vincent M. Roberson
VMR Contractors, Inc.
16710 Richmond Ave.
Hazelcrest, IL 60429

Dear Mr. Roberson:

The Illinois Department of Transportation (IDOT) has approved the "No Change Affidavit" for VMR Contractors, Inc. and determined that the firm continues to meet DBE eligibility standards to perform work towards DBE goals.

In order to remain certified and in good standing, you must annually submit a No Change Affidavit. IDOT will send an affidavit form 60 days prior to the firm's next anniversary date.

Should the submitted information change, you are required to notify IDOT's Bureau of Small Business Enterprises (bureau) within 30 days of the change.

**Note:** Pursuant to 49 CFR Part 26.83(i), whenever there are <u>any</u> change in circumstances affecting your firm's eligibility status, your firm <u>must</u> provide written notification to IDOT within 30 days of the occurrence of the change. If you fail to make timely notification, it may result in the loss of your firm's certification.

If you have any questions, please contact the Bureau of Small Business Enterprises at (217) 782-5490.

Sincerely,

[redacted]

Debra A. Clark, Bureau Chief
Bureau of Small Business Enterprises

# Unified Certification Program - Search

**Contractor Details**

Browse F.A.Q. Sheet (/UCP/Search/Help)

Print

**VMR Contractors, Inc.**
Vincent M. Roberson
16710 Richmond Ave.
Hazelcrest, IL 60429

**Email:** vincer@vmrinc.net
**Phone:** (708) 574-7205
**Fax:** (708) 331-5335

**County:** Cook

**Categories:** Construction

| NAICS | Speciality |
|---|---|
| 237310-Highway, Street, & Bridge Construction | 237310- CURB & GUTTER, SIDEWALKS |
| 238110-Poured Concrete Foundation and Structure Contractors | STEEL, REINFORCING - REBAR PLACEMENT |
| | WELDING |
| | 238110- MISCELLANEOUS CONCRETE |

© 2017 Illinois Department of Transportation

Version: 1.1.27.5458

TONI PRECKWINKLE
PRESIDENT
Cook County Board
of Commissioners

BRANDON JOHNSON
1st District

DENNIS DEER
2nd District

BILL LOWRY
3rd District

STANLEY MOORE
4th District

DEBORAH SIMS
5th District

DONNA MILLER
6th District

ALMA E. ANAYA
7th District

LUIS ARROYO, JR.
8th District

PETER N. SILVESTRI
9th District

BRIDGET GAINER
10th District

JOHN P. DALEY
11th District

BRIDGET DEGNEN
12th District

LARRY SUFFREDIN
13th District

SCOTT R. BRITTON
14th District

KEVIN B. MORRISON
15th District

JEFFREY R. TOBOLSKI
16th District

SEAN M. MORRISON
17th District

OFFICE OF CONTRACT COMPLIANCE
**EDWARD H. OLIVIERI**
DIRECTOR
118 N. Clark, County Building, Room 1020 • Chicago, Illinois 60602 • (312) 603-5502

March 18, 2019

Mr. Vincent Roberson, President
VMR Contractors, Inc.
16710 Richmond Avenue, Suite 5
Hazelcrest, IL 60429

**Re: Annual Certification Expires: March 18, 2020**

Dear Mr. Roberson:

Congratulations on your continued eligibility for Certification as a **Minority-owned Business Enterprise (MBE)** by Cook County Government. This certification is valid until **March 18, 2022**; however, you must re-validate your firms' certification annually.

As a condition of continued Certification, you must file a **"No Change Affidavit" within sixty (60) business days prior to the date of Annual Certification Expiration**. Failure to file this Affidavit shall result in the termination of your Certification. You must notify Cook County Government's Office of Contract Compliance of any change in ownership or control or any other matters or facts affecting your firm's eligibility for Certification within **fifteen (15) business days** of such change.

Cook County Government may commence action to remove your firm as an **MBE** vendor if you fail to notify us of any changes of facts affecting your firm's Certification, or if your firm otherwise fails to cooperate with the County in any inquiry or investigation. Removal of status may also be commenced if your firm is found to be involved in bidding or contractual irregularities.

Your firm's name will be listed in Cook County's Directory of certified firms in the following area(s) of specialty:

**Construction: Concrete -Rebar**

Your firm's participation on Cook County contracts will be credited toward **MBE** goals in your area(s) of specialty. While your participation on Cook County contracts is not limited to your specialty, credit toward **MBE** goals will be given only for work performed in the specialty category.

Thank you for your continued interest in Cook County Government's Minority, Women, Veteran, and Service-Disabled Veteran Business Enterprise Programs.

Sincerely,

[redacted]

Edward H. Olivieri
Contract Compliance Director

EHO/lar

| CONTRACT # | I-18-4428 |
|---|---|

| DBE FIRM NAME: | ALPINE DEMOLITION SERVICES, LLC |
|---|---|
| CIRCLE ALL THAT APPLY: | DBE MBE WBE SBA 8(A) |

CHECK ALL THAT APPLY:

PRIME ____ JV PARTNER ____ SUBCONTRACTOR X TRUCKER ____ SUPPLIER ____ MANUFACTURER ____

| SUBCONTRACTOR: | TIER 1 (SUB TO PRIME): Y N | TIER 2 OR BELOW: Y N | UNDER CONTRACT TO: |
|---|---|---|---|

This form must be completed for EACH disadvantaged business participating in the DBE Utilization Plan. This form is due to the Tollway by 5:00 pm on the fifth calendar day after notification to the prime by the Tollway as low apparent bidder to constructionbid@getipass.com. If additional space is needed, complete an additional form(s) for the firm or attach a detailed information on the DBE firm company letterhead.

| PAY ITEM NO. * | DESCRIPTION: Indicate whether furnish only, or both furnish and install. | QUANTITY | UNIT PRICE | TOTAL CONTRACT AMOUNT ($) | CHECK IF SUPPLIER | TOTAL DBE CREDIT AMOUNT ($) (reduce to 60% of contract amount if firm is a SUPPLIER) |
|---|---|---|---|---|---|---|
| VARIOUS | DEMOLITION WORK | 1 LS | | (SEE ATTACHED) | | |
| | | | | | | |
| | | | | | | |
| | | | | | | |
| | | | TOTALS FOR THIS DBE FIRM: | $954,525.00 | | |

*Contingency Work must not be included under Pay Items and will not be approved toward DBE goal participation until such time as those Pay Items have been confirmed as required work of the contract. Direct Allowance items, including but not limited to Mobilization Item #JS671010, will not be approved within the DBE Utilization Plan. NOTE that these items are not included in the determination of the DBE Goal percentage.

1. **PARTIAL PAY ITEMS:** For any of the above ITEMS that are partial pay items, specifically describe the work and subcontract dollar amount.

2. **COMMITMENT:** The undersigned certify that the information herein is true and correct, and that the DBE listed below has agreed to perform a commercially-useful function in the work of the contract item(s) listed above and to execute a contract to that effect with the Prime Contractor. The undersigned further understand that NO CHANGES to the type or scope of work performed by the DBE may be made without PRIOR WRITTEN APPROVAL and that complete and accurate information regarding actual work performed by the DBE on this contract and the payment thereto must be provided to ISTHA's Department of Diversity and Strategic Development. **The Prime Contractor will not assign any of the contract items listed above to a firm other than the DBE identified below without ISTHA's prior written approval. The Prime Contractor must request, in writing, approval by ISTHA's Diversity and Strategic Development Department of any proposed amendment to the type or scope of work to be performed by the DBE no later than three business days from the date the Prime Contractor becomes aware of the circumstances supporting the request. Failure to receive written approval prior to a change in type or scope is a [redacted]BE Participation and can subject the contractor to contract sanctions.**

[redacted] Chief Estimator 6/25/2019

Signature for Prime Contractor — Title — Date

Contact: Tim Polk

Firm Name: Walsh Construction Co. II, LLC

E-mail: TPolk@walshgroup.com

Phone: 312-563-5400

Address: 929 W. Adams Street, Chicago, IL 60607

[redacted] PRESIDENT 6/5/19

Signature for DBE Contractor — Title — Date

Contact: KELLI PAWLIK

Firm Name: ALPINE DEMOLITION SERVICES, LLC

E-mail: kelli@knockitdown.com

Phone: 630-761-0700

Address: 3515 STERN AVENUE, ST. CHARLES, IL 60174

## THE ILLINOIS STATE TOLL HIGHWAY AUTHORITY (TOLLWAY)

### CONTRACT NO. I-18-4428

### BRIDGE RECONSTRUCTION (BN 261) BURLINGTON NORTHERN SANTA FE (BNSF) RAILWAY OVER THE TRI-STATE TOLLWAY (I-294)

### MILE POST 26.6

### SCHEDULE OF PRICES

| SP | PAY ITEM NUMBER | DESIGNATION | UNIT | QUANTITY | UNIT PRICE DOLLAR | AMOUNT DOLLAR |
|---|---|---|---|---|---|---|
| * | 50100300 | REMOVAL OF EXISTING STRUCTURES NO. 1 | EACH | 1 | $ 474,000.00 | $ 474,000.00 |
| * | 50100400 | REMOVAL OF EXISTING STRUCTURES NO. 2 | EACH | 1 | $ 276,000.00 | $ 276,000.00 |
| * | X0322924 | RETAINING WALL REMOVAL | SQ FT | 589 | $ 85.00 | $ 50,065.00 |
| * | Z0076496 | CONCRETE RETAINING WALL REMOVAL | FOOT | 1,171 | $ 82.00 | $ 96,022.00 |
| * | JT599040 | REMOVAL OF EXISTING NOISE ABATEMENT WALL | SQ FT | 6,805 | $ 6.50 | $ 44,232.50 |
| | | SUBCONTRACTOR BOND | LS | 1 | $ 14,205.70 | $ 14,205.70 |
| | | | | | TOTAL AMOUNT OF CORE WORK: | $ 954,525.20 |

LEGEND FOR SP COLUMN

- * INDICATES SPECIAL PROVISION
- ** INDICATES TOLLWAY SUPPLEMENTAL SPECIFICATIONS
- *** INDICATES IDOT RECURRING SPECIAL PROVISION
- BDE INDICATES IDOT BDE SPECIAL PROVISION
- GBSP INDICATES IDOT GUIDE BRIDGE SPECIAL PROVISION

ALPINE DEMOLITIONS SERVICES, LLC
3515 STERN AVENUE
[redacted]

SIGNATURE
Kelly A. Pawlik
BY

# Unified Certification Program - Search

**Contractor Details**

Browse F.A.Q. Sheet (/UCP/Search/Help)

Print

**Alpine Demolition Services, LLC**
Kelli A. Pawlik
3515 Stern Ave.
St. Charles, IL 60174

**Email:** kelli@knockitdown.com
**Phone:** (630) 761-0700
**Fax:** (630) 761-0777

**County:** Kane

**Categories:** Construction

| NAICS | Speciality |
|---|---|
| 237310-Highway, Street, & Bridge Construction | 237310- DEMOLITION - CONSTRUCTION |
| 238910-Site Preparation Contractors | 238910- DEMOLITION - BUILDING |

© 2017 Illinois Department of Transportation

Version: 1.1.27.5458

| CONTRACT # | I-18-4428 |
|---|---|

| DBE FIRM NAME: | La Grange Crane Service Inc. |
|---|---|
| CIRCLE ALL THAT APPLY: | (DBE) MBE (WBE) SBA 8(A) |

| CHECK ALL THAT APPLY: | | | | | |
|---|---|---|---|---|---|
| PRIME _____ | JV PARTNER _____ | SUBCONTRACTOR X | TRUCKER _____ | SUPPLIER _____ | MANUFACTURER _____ |

| SUBCONTRACTOR: | TIER 1 (SUB TO PRIME): (Y) N | TIER 2 OR BELOW: Y N | UNDER CONTRACT TO: |
|---|---|---|---|

This form must be completed for EACH disadvantaged business participating in the DBE Utilization Plan. This form is due to the Tollway by 5:00 pm on the fifth calendar day after notification to the prime by the Tollway as low apparent bidder to constructionbid@getipass.com. If additional space is needed, complete an additional form(s) for the firm or attach a detailed information on the DBE firm company letterhead.

| PAY ITEM NO. * | DESCRIPTION: Indicate whether furnish only, or both furnish and install. | QUANTITY | UNIT PRICE | TOTAL CONTRACT AMOUNT ($) | CHECK IF SUPPLIER | TOTAL DBE CREDIT AMOUNT ($) (reduce to 60% of contract amount if firm is a SUPPLIER) |
|---|---|---|---|---|---|---|
| | | | | | | |
| Various | Operated Crane Rental | 1 LS | | (See Attached) | | |
| | NAICS 238990 | | | | | |
| | | | | | | |
| | | | | | | |
| | | | TOTALS FOR THIS DBE FIRM: | $74,570.00 | | |

*Contingency Work must not be included under Pay Items and will not be approved toward DBE goal participation until such time as those Pay Items have been confirmed as required work of the contract. Direct Allowance items, including but not limited to Mobilization Item #JS671010, will not be approved within the DBE Utilization Plan. NOTE that these items are not included in the determination of the DBE Goal percentage.

1. **PARTIAL PAY ITEMS:** For any of the above ITEMS that are partial pay items, specifically describe the work and subcontract dollar amount.

2. **COMMITMENT:** The undersigned certify that the information herein is true and correct, and that the DBE listed below has agreed to perform a commercially-useful function in the work of the contract item(s) listed above and to execute a contract to that effect with the Prime Contractor. The undersigned further understand that NO CHANGES to the type or scope of work performed by the DBE may be made without PRIOR WRITTEN APPROVAL and that complete and accurate information regarding actual work performed by the DBE on this contract and the payment thereto must be provided to ISTHA's Department of Diversity and Strategic Development. **The Prime Contractor will not assign any of the contract items listed above to a firm other than the DBE identified below without ISTHA's prior written approval. The Prime Contractor must request, in writing, approval by ISTHA's Diversity and Strategic Development Department of any proposed amendment to the type or scope of work to be performed by the DBE** no later than three business days from the date the Prime Contractor becomes aware of the circumstances supporting the request. **Failure to r[redacted]ritten approval prior to a change in type or scope is a [redacted]ipation and can subject the contractor to contract sanctions.**

[redacted] Chief Estimator 6/25/2019

[redacted]ature for Prime Contractor — Title — Date

[redacted]ct: Tim Polk

Firm Name: Walsh Construction Co. II, LLC

E-mail: tpolk@walshgroup.com

Phone: 312-563-5400

Address: 929 W Adams St. Chicago, IL 60607

[redacted] President 6/27/19

[redacted]ure for DBE Contractor — Title — Date

[redacted]ct: Judith A. Mooncotch

Firm Name: La Grange Crane Service Inc.

E-mail:

Phone: 708-354-3510

Address: 6189 River Road Hodgkins, IL 60525

# Unified Certification Program - Search

**Contractor Details**

Browse F.A.Q. Sheet (/UCP/Search/Help)

Print

**La Grange Crane Service, Inc.**
Judith A. Mooncotch
6180 River Rd.
Hodgkins, IL 60525-4278

**County:** Cook

**Email:** judijr@lagrangecrane.com

**Phone:** (708) 354-3510

**Fax:** (708) 354-4221

**Categories:** Miscellaneous

| NAICS | Speciality |
|---|---|
| 238990-All Other Specialty Trade Contractors | 238990- MISC: CRANE RENTAL WITH OPERATORS |

© 2017 Illinois Department of Transportation

Version: 1.1.27.5458

## THE ILLINOIS STATE TOLL HIGHWAY AUTHORITY (TOLLWAY)

**CONTRACT NO. I-18-4428**

**BRIDGE RECONSTRUCTION (BN 261) BURLINGTON NORTHERN SANTA FE (BNSF) RAILWAY OVER**

**THE TRI-STATE TOLLWAY (I-294)**

**MILE POST 26.6**

**SCHEDULE OF PRICES**

| SP | PAY ITEM NUMBER | DESIGNATION | UNIT | QUANTITY | UNIT PRICE DOLLAR | AMOUNT DOLLAR |
|---|---|---|---|---|---|---|
| * | X1200140 | PRECAST CONCRETE BOX CULVERT (SPECIAL) (PARTIAL) | L SUM | 1 | $ 30,000.00 | $ 30,000.00 |
| * | JT599P01 | PERFORMANCE BASED NOISE ABATEMENT WALL (PRECAST CONCRETE) NO. 1 (PARTIAL) | L SUM | 1 | $ 44,570.00 | $ 44,570.00 |
| | | | | | TOTAL AMOUNT OF CORE WORK: | $ 74,570.00 |

LEGEND FOR SP COLUMN

| | |
|---|---|
| * | INDICATES SPECIAL PROVISION |
| ** | INDICATES TOLLWAY SUPPLEMENTAL SPECIFICATIONS |
| *** | INDICATES IDOT RECURRING SPECIAL PROVISION |
| BDE | INDICATES IDOT BDE SPECIAL PROVISION |
| GBSP | INDICATES IDOT GUIDE BRIDGE SPECIAL PROVISION |

LA GRANGE CRANE SERVICE, INC.
6180 RIVER ROAD
HODGKINS, IL 60525
[redacted]

[redacted]GNATURE
Judith A. Mooncolch, President
[redacted]BY

Illinois State Toll Highway Authority "ISTHA"

DBE FORM 2025 - DBE PARTICIPATION STATEMENT FORM, PART 2

| CONTRACT # | I-18-4428 |
|---|---|

| DBE FIRM NAME: | DIVINE CEMENT INC. |
|---|---|
| CIRCLE ALL THAT APPLY: | DBE MBE WBE SBA 8(A) |

CHECK ALL THAT APPLY:

PRIME ____ JV PARTNER ____ SUBCONTRACTOR X TRUCKER ____ SUPPLIER ____ MANUFACTURER ____

SUBCONTRACTOR: TIER 1 (SUB TO PRIME): Y N | TIER 2 OR BELOW: Y N UNDER CONTRACT TO:

This form must be completed for EACH disadvantaged business participating in the DBE Utilization Plan. This form is due to the Tollway by 5:00 pm on the fifth calendar day after notification to the prime by the Tollway as low apparent bidder to constructionbid@getipass.com. If additional space is needed, complete an additional form(s) for the firm or attach a detailed information on the DBE firm company letterhead.

| PAY ITEM NO. * | DESCRIPTION: Indicate whether furnish only, or both furnish and install. | QUANTITY | UNIT PRICE | TOTAL CONTRACT AMOUNT ($) | CHECK IF SUPPLIER | TOTAL DBE CREDIT AMOUNT ($) (reduce to 60% of contract amount if firm is a SUPPLIER) |
|---|---|---|---|---|---|---|
| | PLEASE SEE ATTACHED - Sitework | LS | | (See Attached) | | |
| | | | | | | |
| | | | | | | |
| | TOTALS FOR THIS DBE FIRM: | | | 319,589.00 | | |

*Contingency Work must not be included under Pay Items and will not be approved toward DBE goal participation until such time as those Pay Items have been confirmed as required work of the contract. Direct Allowance items, including but not limited to Mobilization item #JS671010, will not be approved within the DBE Utilization Plan. NOTE that these items are not included in the determination of the DBE Goal percentage.

1. PARTIAL PAY ITEMS: For any of the above ITEMS that are partial pay items, specifically describe the work and subcontract dollar amount. PLEASE SEE ATTACHED

2. COMMITMENT: The undersigned certify that the information herein is true and correct, and that the DBE listed below has agreed to perform a commercially-useful function in the work of the contract item(s) listed above and to execute a contract to that effect with the Prime Contractor. The undersigned further understand that NO CHANGES to the type or scope of work performed by the DBE may be made without PRIOR WRITTEN APPROVAL and that complete and accurate information regarding actual work performed by the DBE on this contract and the payment thereto must be provided to ISTHA's Department of Diversity and Strategic Development. The Prime Contractor will not assign any of the contract items listed above to a firm other than the DBE identified below without ISTHA's prior written approval. The Prime Contractor must request, in writing, approval by ISTHA's Diversity and Strategic Development Department of any proposed amendment to the type or scope of work to be performed by the DBE no later than three business days from the date the Prime Contractor becomes aware of the circumstances supporting the request. Failure to receive [redacted] approval prior to a change in type or scope is a [redacted] Participation and can subject the contractor to contract [redacted]

| Signature of Prime Contractor | Title | Date | Signature for DBE Contractor | Title | Date |
|---|---|---|---|---|---|
| Chief Estimator | | 6/25/2019 | | PRESIDENT | 6-25-2019 |

Contact: Tim Pauk
Firm Name: Walsh Construction Co. II LLC
E-mail: TPauk@walshgroup.com
Phone: 312-563-5400
Address: 929 W. Adams St Chicago IL 60607

Contact: LAWRENCE GREEN
Firm Name: DIVINE CEMENT INC
E-mail: ESTIMATING@DIVINECEMENT.COM
Phone: 815-719-1315
Address: 521 VERA CT. JOLIET ILLINOIS 60436

## THE ILLINOIS STATE TOLL HIGHWAY AUTHORITY (TOLLWAY)

### CONTRACT NO. I-18-4428

### BRIDGE RECONSTRUCTION (BN 261) BURLINGTON NORTHERN SANTA FE (BNSF) RAILWAY OVER THE TRI-STATE TOLLWAY (I-294)

### MILE POST 26.6

### SCHEDULE OF PRICES

| SP | PAY ITEM NUMBER | DESIGNATION | UNIT | QUANTITY | UNIT PRICE DOLLAR | AMOUNT DOLLAR |
|---|---|---|---|---|---|---|
| | 42000060 | WELDED WIRE REINFORCEMENT | SQ YD | 24 | $ 27.00 | $ 648.00 |
| | 42000501 | PORTLAND CEMENT CONCRETE PAVEMENT 10" (JOINTED) | SQ YD | 203 | $ 77.00 | $ 15,631.00 |
| | 42001300 | PROTECTIVE COAT | SQ YD | 1,652 | $ 0.45 | $ 743.40 |
| | 42400200 | PORTLAND CEMENT CONCRETE SIDEWALK 5 INCH | SQ FT | 8,824 | $ 7.25 | $ 63,974.00 |
| | 42400800 | DETECTABLE WARNINGS | SQ FT | 50 | $ 40.00 | $ 2,000.00 |
| | 60600095 | CLASS SI CONCRETE (OUTLET) | CU YD | 8.0 | $ 450.00 | $ 3,600.00 |
| | 60603800 | COMBINATION CONCRETE CURB AND GUTTER, TYPE B-6.12 | FOOT | 2,900 | $ 28.50 | $ 82,650.00 |
| * | JI420900 | DRILL AND GROUT #6 TIE BARS | EACH | 93 | $ 12.00 | $ 1,116.00 |
| * | JI606015 | GUTTER, TYPE G-2, MODIFIED | FOOT | 2,875 | $ 33.00 | $ 94,875.00 |
| * | JI606020 | GUTTER, TYPE G-3 | FOOT | 471 | $ 36.53 | $ 17,203.28 |
| | | SUBCONTRACTOR BOND | L SUM | 1 | $ 31,149.00 | $ 31,149.00 |
| | | | | | TOTAL AMOUNT OF CORE WORK: | **$ 313,589.68** |

LEGEND FOR SP COLUMN

- * INDICATES SPECIAL PROVISION
- ** INDICATES TOLLWAY SUPPLEMENTAL SPECIFICATIONS
- *** INDICATES IDOT RECURRING SPECIAL PROVISION
- BDE INDICATES IDOT BDE SPECIAL PROVISION
- GBSP INDICATES IDOT GUIDE BRIDGE SPECIAL PROVISION

DIVINE CEMENT, INC.
811 PEARSON DRIVE
JOLIET, IL 60435
[redacted]

SIGNATURE Lawrence T Green
BY

# Unified Certification Program - Search

**Contractor Details** Browse F.A.Q. Sheet (/UCP/Search/Help)

Print

**Divine Cement Inc.**
Lawrence Green
811 Pearson Dr.
Joliet, IL 60435

**County:** Will

**Email:** lawrence.green32@yahoo.com

**Phone:** (815) 719-1315

**Fax:** (815) 582-4605

**Categories:** Construction

| NAICS | Speciality |
|---|---|
| 237310-Highway, Street, & Bridge Construction | 237310- CURB & GUTTER, SIDEWALKS |
| 238110-Poured Concrete Foundation and Structure Contractors | PAVEMENT PATCHING |
| | 238110- MISCELLANEOUS CONCRETE |

© 2017 Illinois Department of Transportation Version: 1.1.27.5458

Illinois State Toll Highway Authority "ISTHA"

DBE FORM 2025 - DBE PARTICIPATION STATEMENT FORM, PART 2

| CONTRACT # | I-18-4428 |
|---|---|

| DBE FIRM NAME: | Archon Construction Co. Inc |
|---|---|
| CIRCLE ALL THAT APPLY: | (DBE) MBE (WBE) SBA 8(A) |

CHECK ALL THAT APPLY:

PRIME ____ JV PARTNER ____ SUBCONTRACTOR X TRUCKER ____ SUPPLIER ____ MANUFACTURER ____

| SUBCONTRACTOR: | TIER 1 (SUB TO PRIME): (Y) N | TIER 2 OR BELOW: Y N | UNDER CONTRACT TO: |
|---|---|---|---|

This form must be completed for EACH disadvantaged business participating in the DBE Utilization Plan. This form is due to the Tollway by 5:00 pm on the fifth calendar day after notification to the prime by the Tollway as low apparent bidder to constructionbid@getipass.com. If additional space is needed, complete an additional form(s) for the firm or attach a detailed information on the DBE firm company letterhead.

| PAY ITEM NO. * | DESCRIPTION: Indicate whether furnish only, or both furnish and install. | QUANTITY | UNIT PRICE | TOTAL CONTRACT AMOUNT ($) | CHECK IF SUPPLIER | TOTAL DBE CREDIT AMOUNT ($) (reduce to 60% of contract amount if firm is a SUPPLIER) |
|---|---|---|---|---|---|---|
| | | | | | | |
| Various | Drainage Work (See Attached) | 1 LS | | (See Attached) | | |
| | | | | | | |
| | | | | | | |
| | | | | | | |
| | TOTALS FOR THIS DBE FIRM: | | | 2,557,190.78 | | |

*Contingency Work must not be included under Pay Items and will not be approved toward DBE goal participation until such time as those Pay Items have been confirmed as required work of the contract. Direct Allowance items, including but not limited to Mobilization Item #JS671010, will not be approved within the DBE Utilization Plan. NOTE that these items are not included in the determination of the DBE Goal percentage.

1. **PARTIAL PAY ITEMS:** For any of the above ITEMS that are partial pay items, specifically describe the work and subcontract dollar amount.

2. **COMMITMENT:** The undersigned certify that the information herein is true and correct, and that the DBE listed below has agreed to perform a commercially-useful function in the work of the contract item(s) listed above and to execute a contract to that effect with the Prime Contractor. The undersigned further understand that NO CHANGES to the type or scope of work performed by the DBE may be made without PRIOR WRITTEN APPROVAL and that complete and accurate information regarding actual work performed by the DBE on this contract and the payment thereto must be provided to ISTHA's Department of Diversity and Strategic Development. **The Prime Contractor will not assign any of the contract items listed above to a firm other than the DBE identified below without ISTHA's prior written approval.** The **Prime Contractor must request, in writing, approval by ISTHA's Diversity and Strategic Development Department of any proposed amendment to the type or scope of work to be performed by the DBE** no [redacted] the Prime Contractor becomes aware of the circumstances supporting the request. **Failure to receive written approval prior to a change in type or scope is a** [redacted] **ipation and can subject the contractor to contract sanctions.**

[redacted] Chief Estimator 6/25/2019

Signature for Prime Contractor — Title — Date

Contact: Tim Polk

Firm Name: Walsh Construction Co. II, LLC

E-mail: tpolk@walshgroup.com

Phone: 312-563-5400

Address: 929 W Adams St. Chicago, IL 60607

[redacted] Civil Const Mgr 6-28-19

Signature for DBE Contractor — Title — Date

Contact: Dominic Fiordiosa

Firm Name: Archon Const. Co. Inc.

E-mail: Dominic@ArchonConstruction

Phone: 630 495-0015

Address: 563 South Route 53 Addison Ill. 60101

## THE ILLINOIS STATE TOLL HIGHWAY AUTHORITY (TOLLWAY)

**CONTRACT NO. I-18-4428**

**BRIDGE RECONSTRUCTION (BN 261) BURLINGTON NORTHERN SANTA FE (BNSF) RAILWAY OVER THE TRI-STATE TOLLWAY (I-294)**

**MILE POST 26.6**

**SCHEDULE OF PRICES**

**ARCHON**

| SP | PAY ITEM NUMBER | DESIGNATION | UNIT | QUANTITY | UNIT PRICE DOLLAR | AMOUNT DOLLAR |
|---|---|---|---|---|---|---|
| | 20800150 | TRENCH BACKFILL | CU YD | 5,210 | $ 88.60 | $ 461,606.00 |
| | 50104400 | CONCRETE HEADWALL REMOVAL | EACH | 10 | $ 1,225.00 | $ 12,250.00 |
| | 54001001 | BOX CULVERT END SECTIONS, CULVERT NO. 1 | EACH | 1 | $ 33,902.00 | $ 33,902.00 |
| | 54001003 | BOX CULVERT END SECTIONS, CULVERT NO. 3 | EACH | 1 | $ 14,017.00 | $ 14,017.00 |
| | 54001004 | BOX CULVERT END SECTIONS, CULVERT NO. 4 | EACH | 1 | $ 11,998.00 | $ 11,998.00 |
| | 54010605 | PRECAST CONCRETE BOX CULVERTS 6'X5' | FOOT | 562 | $ 663.70 | $ 372,999.40 |
| | 550A0070 | STORM SEWERS, CLASS A, TYPE 1 15" | FOOT | 152 | $ 278.65 | $ 42,354.80 |
| | 550A0120 | STORM SEWERS, CLASS A, TYPE 1 24" | FOOT | 58 | $ 291.25 | $ 16,892.50 |
| | 550A0190 | STORM SEWERS, CLASS A, TYPE 1 48" | FOOT | 55 | $ 208.80 | $ 11,484.00 |
| | 550A0340 | STORM SEWERS, CLASS A, TYPE 2 12" | FOOT | 88 | $ 78.65 | $ 6,921.20 |
| | 550A0360 | STORM SEWERS, CLASS A, TYPE 2 15" | FOOT | 1,927 | $ 60.15 | $ 115,909.05 |
| | 550A0380 | STORM SEWERS, CLASS A, TYPE 2 18" | FOOT | 235 | $ 87.25 | $ 20,503.75 |
| | 550A0410 | STORM SEWERS, CLASS A, TYPE 2 24" | FOOT | 202 | $ 73.35 | $ 14,816.70 |
| | 550A0430 | STORM SEWERS, CLASS A, TYPE 2 30" | FOOT | 1,033 | $ 83.30 | $ 86,048.90 |
| | 550A0470 | STORM SEWERS, CLASS A, TYPE 2 42" | FOOT | 1,920 | $ 146.70 | $ 281,664.00 |
| | 550A0480 | STORM SEWERS, CLASS A, TYPE 2 48" | FOOT | 392 | $ 149.90 | $ 58,760.80 |
| | 550A5500 | STORM SEWERS, CLASS A, TYPE 2 EQUIVALENT ROUND-SIZE 42" | FOOT | 9 | $ 1,021.00 | $ 9,189.00 |
| | 55100200 | STORM SEWER REMOVAL 6" | FOOT | 41 | $ 6.70 | $ 274.70 |
| | 55100400 | STORM SEWER REMOVAL 10" | FOOT | 162 | $ 1.70 | $ 275.40 |
| | 55100500 | STORM SEWER REMOVAL 12" | FOOT | 97 | $ 2.80 | $ 271.60 |
| | 55100700 | STORM SEWER REMOVAL 15" | FOOT | 1,074 | $ 1.00 | $ 1,074.00 |

| | | | | | | | | |
|---|---|---|---|---|---|---|---|---|
| | 55100900 | STORM SEWER REMOVAL 18" | FOOT | 44 | $ | 6.25 | $ | 275.00 |
| | 55101200 | STORM SEWER REMOVAL 24" | FOOT | 1,175 | $ | 13.95 | $ | 16,391.25 |
| | 55101600 | STORM SEWER REMOVAL 36" | FOOT | 103 | $ | 10.70 | $ | 1,102.10 |
| | 55101800 | STORM SEWER REMOVAL 42" | FOOT | 526 | $ | 27.75 | $ | 14,596.50 |
| | 55101900 | STORM SEWER REMOVAL 48" | FOOT | 8 | $ | 137.85 | $ | 1,102.80 |
| | 56100900 | WATER MAIN 12" | FOOT | 1,818 | $ | 137.35 | $ | 249,702.30 |
| | 60200105 | CATCH BASINS, TYPE A, 4'-DIAMETER, TYPE 1 FRAME, OPEN LID | EACH | 10 | $ | 3,100.00 | $ | 31,000.00 |
| | 60200305 | CATCH BASINS, TYPE A, 4'-DIAMETER, TYPE 3 FRAME AND GRATE | EACH | 8 | $ | 3,717.00 | $ | 29,736.00 |
| | 60200805 | CATCH BASINS, TYPE A, 4'-DIAMETER, TYPE 8 GRATE | EACH | 4 | $ | 3,107.00 | $ | 12,428.00 |
| | 60203805 | CATCH BASINS, TYPE A, 5'-DIAMETER, TYPE 1 FRAME, OPEN LID | EACH | 2 | $ | 4,444.00 | $ | 8,888.00 |
| | 60206905 | CATCH BASINS, TYPE C, TYPE 1 FRAME, OPEN LID | EACH | 2 | $ | 1,588.00 | $ | 3,176.00 |
| | 60218400 | MANHOLES, TYPE A, 4'-DIAMETER, TYPE 1 FRAME, CLOSED LID | EACH | 4 | $ | 4,597.00 | $ | 18,388.00 |
| | 60221100 | MANHOLES, TYPE A, 5'-DIAMETER, TYPE 1 FRAME, CLOSED LID | EACH | 2 | $ | 4,500.00 | $ | 9,000.00 |
| | 60223700 | MANHOLES, TYPE A, 6'-DIAMETER, TYPE 1 FRAME, OPEN LID | EACH | 4 | $ | 6,886.00 | $ | 27,544.00 |
| | 60223800 | MANHOLES, TYPE A, 6'-DIAMETER, TYPE 1 FRAME, CLOSED LID | EACH | 5 | $ | 5,897.00 | $ | 29,485.00 |
| | 60224446 | MANHOLES, TYPE A, 7'-DIAMETER, TYPE 1 FRAME, CLOSED LID | EACH | 4 | $ | 13,097.00 | $ | 52,388.00 |
| | 60224459 | MANHOLES, TYPE A, 8'-DIAMETER, TYPE 1 FRAME, CLOSED LID | EACH | 4 | $ | 15,329.00 | $ | 61,316.00 |
| | 60224469 | MANHOLES, TYPE A, 9'-DIAMETER, TYPE 1 FRAME, CLOSED LID | EACH | 5 | $ | 19,392.00 | $ | 96,960.00 |
| | 60248900 | VALVE VAULTS, TYPE A, 5'-DIAMETER, TYPE 1 FRAME, CLOSED LID | EACH | 2 | $ | 11,729.00 | $ | 23,458.00 |
| | 60250200 | CATCH BASINS TO BE ADJUSTED | EACH | 1 | $ | 1,179.00 | $ | 1,179.00 |
| | 60253100 | CATCH BASINS TO BE RECONSTRUCTED WITH NEW TYPE 1 FRAME, CLOSED LID | EACH | 2 | $ | 1,708.00 | $ | 3,416.00 |
| | 60255800 | MANHOLES TO BE ADJUSTED WITH NEW TYPE 1 FRAME, CLOSED LID | EACH | 1 | $ | 1,526.00 | $ | 1,526.00 |
| | 60258100 | MANHOLES TO BE RECONSTRUCTED WITH NEW TYPE 1 FRAME, OPEN LID | EACH | 1 | $ | 1,708.00 | $ | 1,708.00 |
| | 60258200 | MANHOLES TO BE RECONSTRUCTED WITH NEW TYPE 1 FRAME, CLOSED LID | EACH | 2 | $ | 1,708.00 | $ | 3,416.00 |
| | 60300305 | FRAMES AND LIDS TO BE ADJUSTED | EACH | 3 | $ | 1,179.00 | $ | 3,537.00 |
| | 60406000 | FRAMES AND LIDS, TYPE 1, OPEN LID | EACH | 3 | $ | 347.00 | $ | 1,041.00 |

| | | | | | | |
|---|---|---|---|---|---|---|
| | 60500040 | REMOVING MANHOLES | EACH | 17 | $ 16.00 | $ 272.00 |
| | 60500050 | REMOVING CATCH BASINS | EACH | 22 | $ 12.00 | $ 264.00 |
| | 60500060 | REMOVING INLETS | EACH | 1 | $ 275.00 | $ 275.00 |
| | 60500105 | FILLING MANHOLES | EACH | 1 | $ 1,165.00 | $ 1,165.00 |
| * | X0322916 | PROPOSED STORM SEWER CONNECTION TO EXISTING STORM SEWER | EACH | 1 | $ 1,137.00 | $ 1,137.00 |
| * | X0322917 | PROPOSED STORM SEWER CONNECTION TO EXISTING MANHOLE | EACH | 3 | $ 1,137.00 | $ 3,411.00 |
| * | X0326804 | COMBINED SEWER REMOVAL 42" | FOOT | 607 | $ 70.85 | $ 43,005.95 |
| * | X0327754 | TEMPORARY BULKHEAD | EACH | 6 | $ 138.00 | $ 828.00 |
| * | X5610651 | ABANDON EXISTING WATER MAIN, FILL WITH CLSM | FOOT | 1,793 | $ 17.90 | $ 32,094.70 |
| * | X6020293 | MANHOLES, TYPE A, 8'-DIAMETER, WITH 2 TYPE 1 FRAME, CLOSED LID, RESTRICTOR PLATE | EACH | 1 | $ 37,298.00 | $ 37,298.00 |
| * | X6020710 | CATCH BASIN TO BE ADJUSTED WITH SPECIAL FRAME AND GRATE | EACH | 2 | $ 1,179.00 | $ 2,358.00 |
| * | X6022850 | MANHOLE, SANITARY, 8' DIAMETER, TYPE 1 FRAME, CLOSED LID | EACH | 2 | $ 21,429.00 | $ 42,858.00 |
| * | X6022900 | CATCH BASINS TO BE RECONSTRUCTED (SPECIAL) | EACH | 2 | $ 1,352.00 | $ 2,704.00 |
| * | X6024200 | MANHOLES, TYPE A, 6'-DIAMETER, TYPE 1 FRAME, CLOSED LID, SPECIAL | EACH | 1 | $ 6,805.00 | $ 6,805.00 |
| * | X6026051 | SANITARY MANHOLES TO BE RECONSTRUCTED | EACH | 1 | $ 1,691.00 | $ 1,691.00 |
| * | X6026054 | SANITARY MANHOLES TO BE REMOVED | EACH | 2 | $ 137.00 | $ 274.00 |
| * | X6026000 | MANHOLES TO BE RECONSTRUCTED (SPECIAL) | EACH | 1 | $ 1,359.00 | $ 1,359.00 |
| * | X6040205 | FRAMES AND LIDS, SPECIAL | EACH | 2 | $ 3,116.00 | $ 6,232.00 |
| * | XX004360 | SANITARY SEWER BYPASS PUMPING | L SUM | 1 | $ 51,128.00 | $ 51,128.00 |
| * | Z0040530 | PIPE UNDERDRAIN REMOVAL | FOOT | 2,112 | $ 1.00 | $ 2,112.00 |
| * | Z0056648 | STORM SEWERS, TYPE 1, WATER MAIN QUALITY PIPE, 12" | FOOT | 33 | $ 153.65 | $ 5,070.45 |
| * | Z0056650 | STORM SEWERS, TYPE 1, WATER MAIN QUALITY PIPE, 15" | FOOT | 36 | $ 231.15 | $ 8,321.40 |
| * | Z0056666 | STORM SEWERS, TYPE 2, WATER MAIN QUALITY PIPE, 12" | FOOT | 67 | $ 120.15 | $ 8,050.05 |
| * | Z0056670 | STORM SEWERS, TYPE 2, WATER MAIN QUALITY PIPE, 18" | FOOT | 49 | $ 148.55 | $ 7,278.95 |
| * | Z0057950 | SANITARY SEWER 42" | FOOT | 615 | $ 183.20 | $ 112,668.00 |
| * | J1542010 | END SECTION REMOVAL | EACH | 2 | $ 375.00 | $ 750.00 |

| | | | | | | |
|---|---|---|---|---|---|---|
| * | JI593030 | ABANDON AND FILL EXISTING STORM SEWER | CU YD | 152 | $ 78.55 | $ 11,939.60 |
| * | JI601215 | SLOPE DRAIN, 15" | FOOT | 89 | $ 268.40 | $ 23,887.60 |
| * | JI601300 | PIPE UNDERDRAINS, 6" (SPECIAL) | FOOT | 16 | $ 87.40 | $ 1,398.40 |
| * | JI601320 | PIPE UNDERDRAINS, FABRIC LINED TRENCH 6" | FOOT | 2,469 | $ 33.85 | $ 83,575.65 |
| * | JI602117 | CATCH BASINS, TYPE G-2, TYPE G-2 MODIFIED FRAME AND GRATE | EACH | 14 | $ 5,694.00 | $ 79,716.00 |
| * | JI602184 | CATCH BASINS, TYPE A, 4'-DIAMETER, TYPE 20A FRAME AND GRATE | EACH | 2 | $ 3,385.00 | $ 6,770.00 |
| * | JI602367 | MANHOLE, TYPE A, 10'-DIAMETER, TYPE 20A FRAME AND GRATE | EACH | 4 | $ 21,340.00 | $ 85,360.00 |
| * | JI602368 | MANHOLE, TYPE A, 10'-DIAMETER, WITH TWO TYPE 1 FRAME, CLOSED LID, RESTRICTOR PLATE | EACH | 1 | $ 37,298.00 | $ 37,298.00 |
| * | JI680004 | HEADWALL TYPE I, 24" | EACH | 1 | $ 3,893.00 | $ 3,893.00 |
| * | JI680011 | HEADWALL TYPE II, 48" | EACH | 1 | $ 8,415.00 | $ 8,415.00 |
| * | JI680122 | SLOPED HEADWALL TYPE III, 15", 1:3 | EACH | 2 | $ 2,802.00 | $ 5,604.00 |
| * | JI680125 | SLOPED HEADWALL TYPE III, 24", 1:3 | EACH | 3 | $ 2,434.00 | $ 7,302.00 |
| * | JI680127 | SLOPED HEADWALL TYPE III, 30", 1:3 | EACH | 1 | $ 3,420.00 | $ 3,420.00 |
| * | JI680140 | SLOPED HEADWALL TYPE III, 6", 1:6 | EACH | 2 | $ 2,753.00 | $ 5,506.00 |
| * | JI680141 | SLOPED HEADWALL TYPE III, 12", 1:6 | EACH | 1 | $ 3,161.28 | $ 3,161.28 |
| | | SPOIL HAULING CREDIT | LS | 1 | $ (465,439.00) | $ (465,439.00) |
| | | | | | TOTAL AMOUNT OF CORE WORK: | **$ 2,557,190.78** |

LEGEND FOR SP COLUMN

- * INDICATES SPECIAL PROVISION
- ** INDICATES TOLLWAY SUPPLEMENTAL SPECIFICATIONS
- *** INDICATES IDOT RECURRING SPECIAL PROVISION
- BDE INDICATES IDOT BDE SPECIAL PROVISION
- GBSP INDICATES IDOT GUIDE BRIDGE SPECIAL PROVISION

ARCHON CONSTRUCTION CO., INC.
563 SOUTH ROUTE 53

[redacted]

SIGNATURE
Daniel Cardosi
7-1-19

CLOSE WINDOW

Print

## Business & Contact Information

| | |
|---|---|
| BUSINESS NAME | **Archon Construction Co., Inc.** |
| OWNER | **Leta Loizzo** |
| ADDRESS | **563 South Route 53**<br>**Addison, IL 60101-4211** Map This Address |
| PHONE | **630-495-0015 Ext. 109** |
| FAX | **630-620-1295** |
| EMAIL | **leta@archononline.com** |
| WEBSITE | **http://www.archononline.com** |
| ETHNICITY | **Caucasian** |
| GENDER | **Female** |
| COUNTY | **DuPage (IL)** |

## Certification Information

| | |
|---|---|
| CERTIFYING AGENCY | **State of Illinois Central Management Services** |
| CERTIFICATION TYPE | **WBE - Women Business Enterprise** |
| RENEWAL DATE | **10/29/2019** |
| EXPIRATION DATE | **10/29/2019** |
| CERTIFIED BUSINESS DESCRIPTION | **91300 CONSTRUCTION SERVICES, HEAVY, INCLUDING MAINTENANCE AND REPAIR SERVICES** |

## Commodity Codes

| Code | Description |
|---|---|
| NIGP 91300 | CONSTRUCTION SERVICES, HEAVY, INCLUDING MAINTENANCE AND REPAIR SERVICES |

## Additional Information

| | |
|---|---|
| RECIPROCAL CERTIFICATION AGENCY | **City of Chicago** |

# Vendor Information

CLOSE WINDOW

Print

## Business & Contact Information

| | |
|---|---|
| Business Name | **Archon Construction Co., Inc.** |
| Owner | **Leta Loizzo** |
| Address<br>> Map This Address | **563 South Route 53<br>Addison, IL 60101-4211** |
| Phone | **630-495-0015 Ext. 109** |
| Fax | **630-620-1295** |
| Email | leta@archononline.com |

## Certification Information

| | |
|---|---|
| Certifying Agency | **City of Chicago** |
| Certification Type | **WBE - Women Business Enterprise** |
| Certification Date | **3/8/2018** |
| Renewal Date | **2/28/2019** |
| Expiration Date | **2/28/2021** |
| Certified Business Description | **237210 Land subdividing and utility installation (e.g., electric, sewer and water)** |

## Commodity Codes

| Code | Description |
|---|---|
| NAICS 237210 | Land subdividing and utility installation (e.g., electric, sewer and water) |

## Additional Information

| CONTRACT #: | I-18-4428 |
|---|---|

| DBE FIRM NAME: | The Bartech Group of Illinois, Inc. |
|---|---|
| CIRCLE ALL THAT APPLY: | (DBE) (MBE) WBE SBA 8(A) |

CHECK ALL THAT APPLY:

PRIME ____ JV PARTNER ____ SUBCONTRACTOR X TRUCKER ____ SUPPLIER ____ MANUFACTURER ____

SUBCONTRACTOR: TIER 1 (SUB TO PRIME): Y (N) TIER 2 OR BELOW: (Y) N UNDER CONTRACT TO: Electric Conduit Construction

This form must be completed for EACH disadvantaged business participating in the DBE Utilization Plan. This form is due to the Tollway by 5:00 pm on the fifth calendar day after notification to the prime by the Tollway as low apparent bidder to constructionbid@getipass.com. If additional space is needed, complete an additional form(s) for the firm or attach a detailed information on the DBE firm company letterhead.

| PAY ITEM NO. * | DESCRIPTION: Indicate whether furnish only, or both furnish and install. | QUANTITY | UNIT PRICE | TOTAL CONTRACT AMOUNT ($) | CHECK IF SUPPLIER | TOTAL DBE CREDIT AMOUNT ($) (reduce to 60% of contract amount if firm is a SUPPLIER) |
|---|---|---|---|---|---|---|
| JT130707 | Stanby Generator and Automatic | 1 LS | $536,000 | $536,000 | | |
| JT130708 | Temporary Portable Generator | 1 LS | $18,000 | $18,000 | | |
| JT130709 | Well House Electric Work | 1 LS | $95,500 | $95,500 | | |
| | | | | | | |
| | | | | | | |
| | | | TOTALS FOR THIS DBE FIRM: | $649,500.00 | | |

*Contingency Work must not be included under Pay Items and will not be approved toward DBE goal participation until such time as those Pay Items have been confirmed as required work of the contract. Direct Allowance items, including but not limited to Mobilization Item #JS671010, will not be approved within the DBE Utilization Plan. NOTE that these items are not included in the determination of the DBE Goal percentage.

1. PARTIAL PAY ITEMS: For any of the above ITEMS that are partial pay items, specifically describe the work and subcontract dollar amount.

2. COMMITMENT: The undersigned certify that the information herein is true and correct, and that the DBE listed below has agreed to perform a commercially-useful function in the work of the contract item(s) listed above and to execute a contract to that effect with the Prime Contractor. The undersigned further understand that NO CHANGES to the type or scope of work performed by the DBE may be made without PRIOR WRITTEN APPROVAL and that complete and accurate information regarding actual work performed by the DBE on this contract and the payment thereto must be provided to ISTHA's Department of Diversity and Strategic Development. **The Prime Contractor will not assign any of the contract items listed above to a firm other than the DBE identified below without ISTHA's prior written approval. The Prime Contractor must request, in writing, approval by ISTHA's Diversity and Strategic Development Department of any proposed amendment to the type or scope of work to be performed by the DBE no later than three business days from the date the Prime Contractor becomes aware of the circumstances supporting the request. Failure to receive written approval prior to a change in type or scope is a [redacted]pation and can subject the contractor to contract sanctions.**

[redacted] Chief Estimator 6/25/2019

Signature for Prime Contractor Title Date

Contact: Tim Polk

Firm Name: Walsh Construction Co. II, LLC

E-mail: tpolk@walshgroup.com

Phone: 312-563-5400

Address: 929 W Adams St. Chicago, IL 60607

[redacted] Director of Operations 6/25/2019

[redacted]ure for DBE Contractor Title Date

[redacted]ct: John Etten

Firm Name: The Bartech Group of Illinois, Inc.

E-mail: J.Etten@bartechgroup.biz

Phone: 708-940-4648

Address: 236 East 161st Place South Holland, IL 60473

# Unified Certification Program - Search

**Contractor Details**

Browse F.A.Q. Sheet (/UCP/Search/Help)

Print

**The BarTech Group of Illinois, Inc.**
Dwayne Barlow
236 E. 161st Place, Unit C and D
South Holland, IL 60473-0000

**County:** Cook

**Email:** d.barlow@bartechgroup.biz

**Phone:** 773-241-6838

**Fax:** 773-947-8582

**Categories:** Construction

| NAICS | Speciality |
|---|---|
| 237310 - Highway, Street, and Bridge Construction | 237310 - Sign Erection, Highway, Roads Street or Bridge |
| 238210 - Electrical Contractors and Other Wiring Installation Contractors | 238210 - Electrical Contractor |
| 238990 - All Other Specialty Trade Contractors | 238990 - Fencing Installation |
| 541990 - All Other Professional, Scientific, and Technical Services | 541990 - Quality Control Services |

© 2017 Illinois Department of Transportation

Version: 1.1.27.5458

Illinois State Toll Highway Authority "ISTHA"

DBE FORM 2025 - DBE PARTICIPATION STATEMENT FORM, PART 2

| CONTRACT # | I-18-4428 |
|---|---|

| DBE FIRM NAME: | EVERLIGHTS INC |
|---|---|
| CIRCLE ALL THAT APPLY: | DBE MBE WBE SBA 8(A) |

CHECK ALL THAT APPLY:

PRIME ____ JV PARTNER ____ SUBCONTRACTOR ____ TRUCKER ____ SUPPLIER X MANUFACTURER ____

| SUBCONTRACTOR: | TIER 1 (SUB TO PRIME): Y (N) | TIER 2 OR BELOW: (Y) N | UNDER CONTRACT TO: Electric Conduit Constructors |
|---|---|---|---|

This form must be completed for EACH disadvantaged business participating in the DBE Utilization Plan. This form is due to the Tollway by 5:00 pm on the fifth calendar day after notification to the prime by the Tollway as low apparent bidder to constructionbid@getipass.com. If additional space is needed, complete an additional form(s) for the firm or attach a detailed information on the DBE firm company letterhead.

| PAY ITEM NO.* | DESCRIPTION: Indicate whether furnish only, or both furnish and install. | QUANTITY | UNIT PRICE | TOTAL CONTRACT AMOUNT ($) | CHECK IF SUPPLIER | TOTAL DBE CREDIT AMOUNT ($) (reduce to 60% of contract amount if firm is a SUPPLIER) |
|---|---|---|---|---|---|---|
| VARIOUS | ELECTRICAL WORK | | (SEE ATTACHED) | | | (SEE ATTACHED) |
| | Various items, please see attached | | | | | |
| | | | | | | |
| | | | | | | |
| | | | | | | |
| | TOTALS FOR THIS DBE FIRM: | | | $104,397.77 | | $62,638.66 |

*Contingency Work must not be included under Pay Items and will not be approved toward DBE goal participation until such time as those Pay Items have been confirmed as required work of the contract. Direct Allowance items, including but not limited to Mobilization Item #JS671010, will not be approved within the DBE Utilization Plan. NOTE that these items are not included in the determination of the DBE Goal percentage.

1. **PARTIAL PAY ITEMS:** For any of the above ITEMS that are partial pay items, specifically describe the work and subcontract dollar amount.

2. **COMMITMENT:** The undersigned certify that the information herein is true and correct, and that the DBE listed below has agreed to perform a commercially-useful function in the work of the contract item(s) listed above and to execute a contract to that effect with the Prime Contractor. The undersigned further understand that NO CHANGES to the type or scope of work performed by the DBE may be made without PRIOR WRITTEN APPROVAL and that complete and accurate information regarding actual work performed by the DBE on this contract and the payment thereto must be provided to ISTHA's Department of Diversity and Strategic Development. **The Prime Contractor will not assign any of the contract items listed above to a firm other than the DBE identified below without ISTHA's prior written approval. The Prime Contractor must request, in writing, approval by ISTHA's Diversity and Strategic Development Department of any proposed amendment to the type or scope of work to be performed by the DBE** no later than three business days from the date the Prime Contractor becomes aware of the circumstances supporting the request. **Failure to receive written approval prior to a change in type or scope is a** [redacted] **ticipation and can subject the contractor to contract sanctions.**

| Signature for Prime Contractor | Title: Chief Estimator | Date: 6/25/19 |
|---|---|---|
| Contact: | Jim Polk | |
| Firm Name: | Walsh Construction Company II LLC | |
| E-mail: | JPolk@walshgroup.com | |
| Phone: | 312-563-5400 | |
| Address: | 929 W. Adams St. Chicago, IL 60607 | |

| Signature for DBE Contractor | Title: President | Date: 6-24-19 |
|---|---|---|
| Contact: | KELLY GALLAGHER | |
| Firm Name: | EVERLIGHTS INC | |
| E-mail: | KGALLAGHER@EVERLIGHTS.COM | |
| Phone: | 877-934-9873 | |
| Address: | 1105 STEVENSON CT ROSELLE IL 60172 | |

# Unified Certification Program - Search

**Contractor Details** Browse F.A.Q. Sheet (/UCP/Search/Help)

Print

**Everlights, Inc.**
Kelly Gallagher
1900 Greenwood Street,
Unit 8
Evanston, IL 60201

**County:** Cook

**Email:** kgallagher@everlights.com

**Phone:** 773-734-9873

**Fax:** 773-734-9874

**Categories:** Miscellaneous, Supplier

| NAICS | Speciality |
|---|---|
| NAICS Code: 562111 Solid Waste Collection | NAICS Code: 562111 Specialty: Recyclable material collection services and Recyclable material hauling |
| NAICS Code: 423610 Electrical Apparatus and Equipment, Wiring Supplies, and Related Equipment Merchant Wholesalers (STOCKING) | NAICS Code: 423610 Specialty: Light bulbs merchant wholesalers and Lighting fixtures, electric, merchant wholesalers (STOCKING) |

© 2017 Illinois Department of Transportation Version: 1.1.27.5458

ISTHA I-18-4428 Everlights, Inc.

| Pay Item | Description | Qty | Price Per Each | Extended Price | 60% | DBE Amount |
|---|---|---|---|---|---|---|
| 81028180 | UNDERGROUND CONDUIT, GALVANIZED STEEL, 1 1/4" DIA. | 10 | $3.95 | $39.54 | $23.72 | $23.72 |
| 81028210 | UNDERGROUND CONDUIT, GALVANIZED STEEL, 2 1/2" DIA. | 140 | $10.28 | $1,439.79 | $863.87 | $863.87 |
| 81702110 | ELECTRIC CABLE IN CONDUIT, 600V (XLP-TYPE USE) 1/C NO. 10 | 549 | $0.22 | $120.66 | $72.40 | $72.40 |
| 81702130 | ELECTRIC CABLE IN CONDUIT, 600V (XLP-TYPE USE) 1/C NO. 6 | 1,617 | $0.48 | $772.07 | $463.24 | $463.24 |
| X8300001 | LIGHT POLE, SPECIAL | 2 | $2,788.17 | $5,576.34 | $3,111.60 | $3,111.60 |
| JS810242 | CONDUIT ENCASED IN CONCRETE, 6" DIA. PVC | 210 | $2.84 | $596.84 | $358.10 | $358.10 |
| JS812023 | CONDUIT EMBEDDED IN STRUCTURE, 2" DIA., PVC | 50 | $0.58 | $29.14 | $17.48 | $17.48 |
| JS812025 | CONDUIT EMBEDDED IN STRUCTURE, 3" DIA., PVC | 740 | $1.12 | $825.77 | $495.46 | $495.46 |
| JS817213 | ELECTRIC CABLE IN CONDUIT, 600V (XLP-TYPE USE) 1/C NO. 6 | 212 | $0.48 | $101.22 | $60.73 | $60.73 |
| JT160132 | HANDHOLE FOR SINGLE MODE FIBER OPTIC CABLE, 48"X72"X36" | 13 | $4,675.82 | $60,785.66 | $36,471.40 | $36,471.40 |
| X0327141 | LIGHTING STANDARD, TYPE 4A | 2 | $6,895.70 | $13,791.40 | $8,274.84 | $8,274.84 |
| X0327142 | LIGHTING STANDARD, TYPE 4B | 2 | $10,354.84 | $20,709.68 | $12,425.81 | $12,425.81 |
| | | | | | | |
| | **Total:** | | | | | **$62,638.66** |

Kelly Gallaghe[redacted]

*Illinois State Toll Highway Authority "ISTHA"*

**DBE FORM 2025 - DBE PARTICIPATION STATEMENT FORM, PART 2**

| CONTRACT # | I-18-4428 |
|---|---|

| DBE FIRM NAME: | City Lights, Ltd. |
|---|---|
| CIRCLE ALL THAT APPLY: | DBE MBE WBE SBA 8(A) |

CHECK ALL THAT APPLY:

PRIME _____ JV PARTNER _____ SUBCONTRACTOR X TRUCKER _____ SUPPLIER _____ MANUFACTURER _____

| SUBCONTRACTOR: | TIER 1 (SUB TO PRIME): Y (N) | TIER 2 OR BELOW: (Y) N | UNDER CONTRACT TO: Electric Conduit Construction |
|---|---|---|---|

This form must be completed for EACH disadvantaged business participating in the DBE Utilization Plan. This form is due to the Tollway by 5:00 pm on the fifth calendar day after notification to the prime by the Tollway as low apparent bidder to constructionbid@getipass.com. If additional space is needed, complete an additional form(s) for the firm or attach a detailed information on the DBE firm company letterhead.

| PAY ITEM NO. * | DESCRIPTION: Indicate whether furnish only, or both furnish and install. | QUANTITY | UNIT PRICE | TOTAL CONTRACT AMOUNT ($) | CHECK IF SUPPLIER | TOTAL DBE CREDIT AMOUNT ($) (reduce to 60% of contract amount if firm is a SUPPLIER) |
|---|---|---|---|---|---|---|
| | See attached. | | | | | |
| | | | | | | |
| | | | | | | |
| | | | | | | |
| | | | | | | |
| | | | TOTALS FOR THIS DBE FIRM: | 210,155.40 | | |

*Contingency Work must not be included under Pay Items and will not be approved toward DBE goal participation until such time as those Pay Items have been confirmed as required work of the contract. Direct Allowance items, including but not limited to Mobilization item #JS671010, will not be approved within the DBE Utilization Plan. NOTE that these items are not included in the determination of the DBE Goal percentage.

1. **PARTIAL PAY ITEMS:** For any of the above ITEMS that are partial pay items, specifically describe the work and subcontract dollar amount.

2. **COMMITMENT:** The undersigned certify that the information herein is true and correct, and that the DBE listed below has agreed to perform a commercially-useful function in the work of the contract item(s) listed above and to execute a contract to that effect with the Prime Contractor. The undersigned further understand that NO CHANGES to the type or scope of work performed by the DBE may be made without PRIOR WRITTEN APPROVAL and that complete and accurate information regarding actual work performed by the DBE on this contract and the payment thereto must be provided to ISTHA's Department of Diversity and Strategic Development. The Prime Contractor will not assign any of the contract items listed above to a firm other than the DBE identified below without ISTHA's prior written approval. The Prime Contractor must request, in writing, approval by ISTHA's Diversity and Strategic Development Department of any proposed amendment to the type or scope of work to be performed by the DBE no later than three business days from the date the Prime Contractor becomes aware of the circumstances supporting th[redacted] receive written approval prior to a change in type or scope is a [redacted]ation and can subject the contractor to contract sanctio[redacted]

| Signature for Prime Contractor | Title | Date |
|---|---|---|
| [redacted] | Chief Estimator | 6/25/19 |

Contact: Tim / Polk
Firm Name: Walsh Construction Co II LLC
E-mail: tpolk@walshgroup.com
Phone: 312-563-5400
Address: 929 W. Adams St. Chicago IL 60607

| Signature for DBE Contractor | Title | Date |
|---|---|---|
| [redacted] | John Candelaria/Sr. Vice President | 06/25/19 |

Contact: John Candelaria
Firm Name: City Lights, Ltd.
E-mail: info@citylightsltd.com
Phone: 773-626-9162
Address: 9993 Virginia Avenue, Chicago Ridge, IL 60415

ISTHA I-18-4428 City Lights, LTD

| Pay Item | Description | Qty | Price per Each | Extended Price | 100% | DBE Amount |
|---|---|---|---|---|---|---|
| JI811276 | CON AT ST 2 SS | 20 | $109.30 | $2,186.00 | $2,186.00 | $2,186.00 |
| JS811032 | CON AT ST 1 GALVS PVC CT | 393 | $38.50 | $15,130.50 | $15,130.50 | $15,130.50 |
| JS813022 | JBX SS AS 6X6X4 | 5 | $949.30 | $4,746.50 | $4,746.50 | $4,746.50 |
| JS813053 | JBX SS AS 12X10X6 | 1 | $1,741.20 | $1,741.20 | $1,741.20 | $1,741.20 |
| JS813083 | JBX SS AS 18X18X8 | 2 | $5,002.00 | $10,004.00 | $10,004.00 | $10,004.00 |
| JS817211 | EC C XLP USE 1C 10 | 2,000 | $1.90 | $3,800.00 | $3,800.00 | $3,800.00 |
| JS817212 | EC C XLP USE 1C 8 | 60 | $2.10 | $126.00 | $126.00 | $126.00 |
| JS817215 | EC C XLP USE 1C 2 | 220 | $4.70 | $1,034.00 | $1,034.00 | $1,034.00 |
| JS821002 | UNDERPASS LUM 150W HPS | 4 | $2,648.70 | $10,594.80 | $10,594.80 | $10,594.80 |
| JS821110 | UNDERPASS LUM LED | 4 | $3,306.40 | $13,225.60 | $13,225.60 | $13,225.60 |
| JS842100 | REM UNDERPASS LUM | 4 | $504.00 | $2,016.00 | $2,016.00 | $2,016.00 |
| JT135042 | WEBCAM | 1 | $145,550.80 | $145,550.80 | $145,550.80 | $145,550.80 |
| | **Total:** | | | | | **$210,155.40** |

John Candelar [redacted]

# Unified Certification Program - Search

**Contractor Details**

Browse F.A.Q. Sheet (/UCP/Search/Help)

Print

**City Lights, Ltd.**
Jacqueline Hoffman
9993 Virginia Avenue
Chicago Ridge, IL
60415-0000

**Email:** Jackie@citylightsltd.com
**Phone:** 770-581-7111
**Fax:** 773-626-8310

**County:** Cook

**Categories:** Construction

| NAICS | Speciality |
| --- | --- |
| 237130 - Cable laying (e.g., cable television, electricity, marine, telephone), including underground<br>237130 - Electric light and power plant (except hydroelectric) construction<br>237130 - Fiber optic cable transmission line construction<br>237130 - Pole line construction<br>237130 - Power and Communication Line and Related Structures Construction<br>237130 - Underground cable (e.g., cable television, electricity, telephone) laying<br>237130 - Utility line (i.e., communication, electric power), construction<br>237310 - Highway, Street, and Bridge Construction<br>238110 - Concrete finishing<br>238110 - Concrete pouring<br>238110 - Concrete pumping (i.e., placement)<br>238110 - Concrete repair<br>238110 - Footing and foundation concrete contractors<br>238110 - Poured Concrete Foundation and Structure Contractors<br>238210 - Electrical contractors | NAICS 237130 Cable laying (e.g., cable television, electricity, marine, telephone), including underground NAICS 237130 Electric light and power plant (except hydroelectric) construction NAICS 237130 Fiber optic cable transmission line construction NAICS 237130 Pole line construction NAICS 237130 Power and Communication Line and Related Structures Construction NAICS 237130 Underground cable (e.g., cable television, electricity, telephone) laying ( NAICS 237130 Utility line (i.e., commun |

© 2017 Illinois Department of Transportation Version: 1.1.27.5458

*Illinois State Toll Highway Authority "ISTHA"*

**DBE FORM 2025 - DBE PARTICIPATION STATEMENT FORM, PART 2/2**

| CONTRACT # | I-18-4428 |
|---|---|

| DBE FIRM NAME: | Maintenance Coatings Co. |
|---|---|
| CIRCLE ALL THAT APPLY: | DBE MBE WBE SBA 8(A) |

CHECK ALL THAT APPLY:

PRIME ____ JV PARTNER ____ SUBCONTRACTOR X TRUCKER ____ SUPPLIER ____ MANUFACTURER ____

| SUBCONTRACTOR: | TIER 1 (SUB TO PRIME): Y (N) | TIER 2 OR BELOW: (Y) N | UNDER CONTRACT TO: Traffic Services, Inc. |
|---|---|---|---|

This form must be completed for EACH disadvantaged business participating in the DBE Utilization Plan.

Attach this form to the DBE Utilization Plan form, DBE Form 2026. If additional space is needed, complete an additional form(s) for the firm or attach a spreadsheet on DBE FIRM letterhead.

| PAY ITEM NO. * | DESCRIPTION: Indicate whether furnish only, or both furnish and install. | QUANTITY | UNIT PRICE | TOTAL CONTRACT AMOUNT ($) | CHECK IF SUPPLIER | TOTAL DBE CREDIT AMOUNT ($) (reduce to 60% of contract amount if firm is a SUPPLIER) |
|---|---|---|---|---|---|---|
| Various | See attached quote | LS | | See attached | | |
| | | | | | | |
| | | | | | | |
| | | | | | | |
| | | | | | | |
| | TOTALS FOR THIS DBE FIRM: | | | $144,590.80 | | |

*Contingency Work must not be included under Pay Items and will not be approved toward DBE goal participation until such time as those Pay Items have been confirmed as required work of the contract. Direct Allowance items and/or Mobilization Item #JS671010, will not be approved within the DBE Utilization Plan for DBE subcontractors but credit may be allowed if performed as part of specific pay item(s) during contract execution. Reference Sections II, VI.A.2 and VI.B.1 of the Special provision for DBE Participation. NOTE that these items are not included in the determination of the DBE Goal percentage.

1. **PARTIAL PAY ITEMS:** For any of the above ITEMS that are partial pay items, specifically describe the work and subcontract dollar amoun

2. **COMMITMENT:** The undersigned certify that the information herein is true and correct, and that the DBE listed below has agreed to perform a commercially-useful function in the work of the contract item(s) listed above and to execute a contract to that effect with the Prime Contractor. The undersigned further understand that NO CHANGES to the type or scope of work performed by the DBE may be made without PRIOR WRITTEN **APPROVAL** and that complete and accurate information regarding actual work performed by the DBE on this contract and the payment thereto must be provided to ISTHA's Department of Diversity and Strategic Development. **The Prime Contractor will not assign any of the contract items listed above to a firm other than the DBE identified below without ISTHA's prior written approval. The Prime Contractor must request, in writing, approval by ISTHA's Diversity and Strategic Development Department of any proposed amendment to the type or scope of work to be performed by the DBE** no later than three business days from the date the Prime Contractor becomes aware of the circumstances supporting the request. **Failure to receive written approval prior to a change in type or scope is a violation of the Special Provision for DBE Participation and can subject the contractor to contract sanctions.**

[redacted] Chief Estimator
Title

[redacted] 6/25/2019

Contact: Tim Polk tpolk@walshgroup.com

Phone: 312-563-5400

Firm Name: Walsh Construction Co. II, LLC

Address: 929 W. Adams St. Chicago, IL 60607

[redacted] President
Title

[redacted] 06/04/19

Contact: Julie Wrightsman

Phone: (847)622-0020 (office) (312)287-6229 (mobile)

Firm Name: Maintenance Coatings Co.

Address: 543 Woodbury Street, South Elgin, IL 60177

THE ILLINOIS STATE TOLL HIGHWAY AUTHORITY (TOLLWAY)

CONTRACT NO. I-18-4428

BRIDGE RECONSTRUCTION (BN 261) BURLINGTON NORTHERN SANTA FE (BNSF) RAILWAY OVER

THE TRI-STATE TOLLWAY (I-294)

MILE POST 26.6

SCHEDULE OF PRICES

| SP | PAY ITEM NUMBER | DESIGNATION | UNIT | QUANTITY | UNIT PRICE DOLLAR | AMOUNT DOLLAR |
|---|---|---|---|---|---|---|
| | 78000100 | THERMOPLASTIC PAVEMENT MARKING - LETTERS AND SYMBOLS | SQ FT | 7.0 | $ 18.00 | $ 126.00 |
| | 78000200 | THERMOPLASTIC PAVEMENT MARKING - LINE 4" | FOOT | 2,090 | $ 3.00 | $ 6,270.00 |
| | 78000600 | THERMOPLASTIC PAVEMENT MARKING - LINE 12" | FOOT | 66 | $ 9.00 | $ 594.00 |
| | 78005110 | EPOXY PAVEMENT MARKING - LINE 4" | FOOT | 12,544 | $ 1.20 | $ 15,052.80 |
| | 78005130 | EPOXY PAVEMENT MARKING - LINE 6" | FOOT | 9,408 | $ 1.50 | $ 14,112.00 |
| | 78005150 | EPOXY PAVEMENT MARKING - LINE 12" | FOOT | 1,111 | $ 3.00 | $ 3,333.00 |
| * | JI781010 | RAISED PAVEMENT LANE MARKER, REFLECTOR | EACH | 378 | $ 13.50 | $ 5,103.00 |
| * | JS701010 | MAINTENANCE OF TRAFFIC (PARTIAL ITEM) | L SUM | 1 | $ 100,000.00 | $ 100,000.00 |
| | | | | | TOTAL AMOUNT OF CORE WORK: | $ 144,590.80 |

LEGEND FOR SP COLUMN

- * INDICATES SPECIAL PROVISION
- ** INDICATES TOLLWAY SUPPLEMENTAL SPECIFICATIONS
- *** INDICATES IDOT RECURRING SPECIAL PROVISION
- BDE INDICATES IDOT BDE SPECIAL PROVISION
- GBSP INDICATES IDOT GUIDE BRIDGE SPECIAL PROVISION

MAINTENANCE COATINGS COMPANY
543 WOODBURY STREET
[redacted]

Julie Wrightsman

# Unified Certification Program - Search

**Contractor Details**

Browse F.A.Q. Sheet (/UCP/Search/Help)

Print

**Maintenance Coatings Co.**

Julie Ann Wrightsman
543 Woodbury St
South Elgin, IL 60177-0000

**County:** Cook

**Email:** julie@maintenancecoatings.com

**Phone:** 847-622-0020

**Fax:** 847-622-1087

**Categories:** Construction, Miscellaneous

| NAICS | Speciality |
|---|---|
| 237310 - Airport runway line painting (e.g., striping) | NAICS 237310 Highway, Street, & Bridge Construction (Pavement Marking Services) 237310 - Pavement Marking Services to include: Painting |
| 237310 - Highway, Street, and Bridge Construction | Raised |
| 237310 - Painting lines on highways, streets and bridges | Epoxy |
| 237310 - Painting traffic lanes or parking lots | Polyurea |
| 237310 - Parking lot marking and line painting | Modified Urethane |
| 237310 - Pavement, highway, road, street, bridge or airport runway, construction | Signing |
| 561990 - Flagging (i.e., traffic control) services | Thermoplastic Hand |
| | Preformed Plastic Pavement Marking NAICS 561990 |
| | Flagging (i.e., traffic control) services |

DEPARTMENT OF PROCUREMENT SERVICES

CITY OF CHICAGO

JAN 10 2018

Julie Ann Wrightsman
Maintenance Coatings Co.
543 Woodbury St
South Elgin, IL 60177

Dear Ms. Wrightsman:

The City of Chicago has reviewed your annual *No Change Affidavit* and supporting documentation and is pleased to inform you that your firm, **Maintenance Coatings Co.**, continues to meet the **Disadvantaged Business Enterprise ("DBE")** certification program eligibility standards set forth in 49 CFR Parts 26. Your next No Change Affidavit is due **December 1, 2019**.

This certification allows your firm to participate as a DBE in the Illinois Unified Certification Program (IL UCP). . The participating agencies include the City of Chicago, Illinois Department of Transportation, the Chicago Transit Authority, Metra and Pace.

If there is any change in circumstances during the course of your certification period that affect your ability to meet size, disadvantaged status, ownership, or control requirements or any material change in the information provided in your initial application, you must provide written notification to this agency within thirty (30) days of the occurrence of the change. Failure to provide this information is a ground for denial of certification based on failure to cooperate pursuant to 49 CFR 26.109(c).

Your firm's name will appear in the IL UCP DBE Directory under the following category name(s):

**NAICS Code(s):**

**237310 - Highway, Street, & Bridge Construction (Pavement Marking Services)**

**237310 - Pavement Marking Services to include: Painting; Raised; Epoxy; Polyurea; Modified Urethane; Signing; Thermoplastic Hand; Preformed Plastic Pavement Marking**

**561990 - Flagging (i.e., traffic control) services**

The Directory is used by prime contractors/consultants, as well as other agencies, to solicit participation of DBE firms. The Directory can be accessed on the Internet at https://webapps.dot.illinois.gov/UCP/ExternalSearch.

Your participation on contracts will only be credited toward DBE contract goals when you perform in your firm's approved area(s) of specialty. Credit for participation in an area outside your specialty requires prior approval (verification of resources, expertise, and corresponding support documentation, etc.).

Sincerely;

[redacted]

Shannon E. Andrews
Chief Procurement Officer

SEA/rn

*Illinois State Toll Highway Authority "ISTHA"*

**DBE FORM 2025 - DBE PARTICIPATION STATEMENT FORM, PART 2**

| CONTRACT # | I-18-4428 |
|---|---|

| DBE FIRM NAME: | Natural Creations Landscaping, Inc. |
|---|---|
| CIRCLE ALL THAT APPLY: | (DBE) MBE WBE SBA 8(A) |

| CHECK ALL THAT APPLY: |
|---|
| PRIME ____ JV PARTNER ____ SUBCONTRACTOR X TRUCKER ____ SUPPLIER ____ MANUFACTURER ____ |

| SUBCONTRACTOR: | TIER 1 (SUB TO PRIME): (Y) N | TIER 2 OR BELOW: Y N | UNDER CONTRACT TO: |
|---|---|---|---|

This form must be completed for EACH disadvantaged business participating in the DBE Utilization Plan. This form is due to the Tollway by 5:00 pm on the fifth calendar day after notification to the prime by the Tollway as low apparent bidder to constructionbid@getipass.com. If additional space is needed, complete an additional form(s) for the firm or attach a detailed information on the DBE firm company letterhead.

| PAY ITEM NO. * | DESCRIPTION: Indicate whether furnish only, or both furnish and install. | QUANTITY | UNIT PRICE | TOTAL CONTRACT AMOUNT ($) | CHECK IF SUPPLIER | TOTAL DBE CREDIT AMOUNT ($) (reduce to 60% of contract amount if firm is a SUPPLIER) |
|---|---|---|---|---|---|---|
| Various | Landscaping | 1 LS | | See Attached | | |
| | | | | | | |
| | | | | | | |
| | | | | | | |
| | | | | | | |
| | | | TOTALS FOR THIS DBE FIRM: | $564,044.41 | | |

*Contingency Work must not be included under Pay Items and will not be approved toward DBE goal participation until such time as those Pay Items have been confirmed as required work of the contract. Direct Allowance Items, including but not limited to Mobilization Item #JS671010, will not be approved within the DBE Utilization Plan. NOTE that these items are not included in the determination of the DBE Goal percentage.

**1. PARTIAL PAY ITEMS**: For any of the above ITEMS that are partial pay items, specifically describe the work and subcontract dollar amount.

**2. COMMITMENT:** The undersigned certify that the information herein is true and correct, and that the DBE listed below has agreed to perform a commercially-useful function in the work of the contract item(s) listed above and to execute a contract to that effect with the Prime Contractor. The undersigned further understand that NO CHANGES to the type or scope of work performed by the DBE may be made without PRIOR WRITTEN APPROVAL and that complete and accurate information regarding actual work performed by the DBE on this contract and the payment thereto must be provided to ISTHA's Department of Diversity and Strategic Development. **The Prime Contractor will not assign any of the contract items listed above to a firm other than the DBE identified below without ISTHA's prior written approval. The Prime Contractor must request, in writing, approval by ISTHA's Diversity and Strategic Development Department of any proposed amendment to the type or scope of work to be performed by the DBE** no later than three business days from the date the Prime Contractor becomes aware of the circumstances supporting the request. **Failure to receive written approval prior to a change in type or scope is a [redacted]ipation and can subject the contractor to contract sanctions.**

[redacted] Chief Estimator 6/25/2019

Signature for Prime Contractor — Title — Date

Contact: Jim Polk

Firm Name: Walsh Construction Co. II, LLC

E-mail: tpolk@walshgroup.com

Phone: 312-563-5400

Address: 929 W Adams St. Chicago, IL 60607

[redacted] PRESIDENT 6/25/2019

Signature for DBE Contractor — Title — Date

Contact: JOSÉ M. GARCIA

Firm Name: Natural Creations Landscaping, Inc.

E-mail: JGARCIA@NATURALCREATIONSLANDSCAPING.COM

Phone: 815-724-0991

Address: 356 E Bruce St. Joliet, IL 60432

THE ILLINOIS STATE TOLL HIGHWAY AUTHORITY (TOLLWAY)

CONTRACT NO. I-18-4428

BRIDGE RECONSTRUCTION (BN 261) BURLINGTON NORTHERN SANTA FE (BNSF) RAILWAY OVER

THE TRI-STATE TOLLWAY (I-294)

MILE POST 26.6

SCHEDULE OF PRICES

| SP | PAY ITEM NUMBER | DESIGNATION | UNIT | QUANTITY | UNIT PRICE DOLLAR | AMOUNT DOLLAR |
|---|---|---|---|---|---|---|
| | 20101100 | TREE TRUNK PROTECTION | EACH | 10 | $ 100.00 | $ 1,000.00 |
| | 25000400 | NITROGEN FERTILIZER NUTRIENT | POUND | 475 | $ 3.00 | $ 1,425.00 |
| | 25000500 | PHOSPHORUS FERTILIZER NUTRIENT | POUND | 62 | $ 3.00 | $ 186.00 |
| | 25000600 | POTASSIUM FERTILIZER NUTRIENT | POUND | 1,162 | $ 3.00 | $ 3,486.00 |
| | 25100127 | MULCH, METHOD 3A | ACRE | 25.3 | $ 2,400.00 | $ 60,720.00 |
| | 25100630 | EROSION CONTROL BLANKET | SQ YD | 72,154 | $ 1.10 | $ 79,369.40 |
| | 25200100 | SODDING | SQ YD | 16,686 | $ 7.00 | $ 116,802.00 |
| | 25200110 | SODDING, SALT TOLERANT | SQ YD | 2,192 | $ 8.00 | $ 17,536.00 |
| | 25200200 | SUPPLEMENTAL WATERING | UNIT | 349 | $ 50.00 | $ 17,450.00 |
| | 28000250 | TEMPORARY EROSION CONTROL SEEDING | POUND | 2,520 | $ 2.50 | $ 6,300.00 |
| * | JI211126 | TOPSOIL FURNISH AND PLACE, 6" | SQ YD | 74,346 | $ 0.35 | $ 26,021.10 |
| ** | JS250220 | SEEDING, CLASS 2E | ACRE | 0.7 | $ 3,700.00 | $ 2,590.00 |
| ** | JS250314 | SEEDING, CLASS 4B | ACRE | 0.6 | $ 5,000.00 | $ 3,000.00 |
| ** | JS250318 | SEEDING, CLASS 4F | ACRE | 10.2 | $ 2,900.00 | $ 29,580.00 |
| ** | JS250320 | SEEDING, CLASS 5 | ACRE | 10.2 | $ 5,000.00 | $ 51,000.00 |
| ** | JS250324 | SEEDING, CLASS 5B | ACRE | 0.6 | $ 3,400.00 | $ 2,040.00 |
| ** | JS280050 | SILT FENCE | FOOT | 7,515 | $ 3.75 | $ 28,181.25 |
| ** | JS280051 | RE-ERECT SILT FENCE | FOOT | 1,500 | $ 2.75 | $ 4,125.00 |
| ** | JS280080 | FLOTATION BOOM | FOOT | 200 | $ 50.00 | $ 10,000.00 |
| ** | JS280100 | SUPER SILT FENCE | FOOT | 608 | $ 18.00 | $ 10,944.00 |
| ** | JS280120 | TREE PROTECTION | FOOT | 500 | $ 2.50 | $ 1,250.00 |

## THE ILLINOIS STATE TOLL HIGHWAY AUTHORITY (TOLLWAY)

**CONTRACT NO. I-18-4428**

**BRIDGE RECONSTRUCTION (BN 261) BURLINGTON NORTHERN SANTA FE (BNSF) RAILWAY OVER**

**THE TRI-STATE TOLLWAY (I-294)**

**MILE POST 26.6**

**SCHEDULE OF PRICES**

| SP | PAY ITEM NUMBER | DESIGNATION | UNIT | QUANTITY | UNIT PRICE DOLLAR | AMOUNT DOLLAR |
|---|---|---|---|---|---|---|
| ** | JS280151 | SAME-DAY STABILIZATION | SQ YD | 40,366 | $ 0.01 | $ 403.66 |
| ** | JS280180 | RECTANGULAR INLET PROTECTION | EACH | 6 | $ 200.00 | $ 1,200.00 |
| ** | JS280205 | FILTER FABRIC INLET PROTECTION, COVER TYPE | EACH | 12 | $ 175.00 | $ 2,100.00 |
| ** | JS280210 | FILTER FABRIC INLET PROTECTION, BASKET TYPE | EACH | 54 | $ 100.00 | $ 5,400.00 |
| ** | JS280305 | TEMPORARY DITCH CHECKS | FOOT | 1,000 | $ 9.00 | $ 9,000.00 |
| * | JT285055 | ARTICULATED CONCRETE BLOCK REVETMENT SYSTEM, TYPE 1 | SQ YD | 503 | $ 145.00 | $ 72,935.00 |
| | | | | | TOTAL AMOUNT OF CORE WORK: | $ 564,044.41 |

LEGEND FOR SP COLUMN

- * INDICATES SPECIAL PROVISION
- ** INDICATES TOLLWAY SUPPLEMENTAL SPECIFICATIONS
- *** INDICATES IDOT RECURRING SPECIAL PROVISION
- BDE INDICATES IDOT BDE SPECIAL PROVISION
- GBSP INDICATES IDOT GUIDE BRIDGE SPECIAL PROVISION

NATURAL CREATIONS LANDSCAPING INC.
356 BRUCE ST.

[redacted]

SIGNATURE
JOSÉ M. GARCIA
BY PRESIDENT

# Unified Certification Program - Search

**Contractor Details** Browse F.A.Q. Sheet (/UCP/Search/Help)

Print

**Natural Creations Landscaping Inc.**
Jose M. Garcia
356 E. Bruce St.
Joliet, IL 60432

**County:** DuPage

**Email:** jgarcia@naturalcreationslandscaping.com

**Phone:** (815) 724-0991

**Fax:** (815) 724-0996

**Categories:** Construction, Trucking

| NAICS | Speciality |
|---|---|
| 237310-Highway, Street, & Bridge Construction | 237310- EXCAVATING & GRADING - CONSTRUCTION |
| 238140-Masonry Contractors | 238140- INSTAL.PAV.BRICK & PRECAST RETAINING WALLS |
| 238990-All Other Specialty Trade Contractors | 238990- MISC: BRICK, GRANITE & SIDEWALK MASONRY |
| 484220-Specialized Freight (except Used Goods) Trucking, Local | 484220- TRUCKING |

© 2017 Illinois Department of Transportation Version: 1.1.27.5458

**Illinois Department of Transportation**
**Office of Business & Workforce Diversity**
**2300 South Dirksen Parkway / Springfield, Illinois 62764**

March 7, 2019

CERTIFIED-RETURN RECEIPT REQUESTED

Mr. Jose M. Garcia
Natural Creations Landscaping Inc.
356 E. Bruce St.
Joliet, IL 60432

Dear Mr. Garcia:

The Illinois Department of Transportation (IDOT) has approved the *No Change Affidavit* for Natural Creations Landscaping Inc. and determined that the firm continues to meet DBE eligibility standards to perform work towards DBE goals.

To remain certified and in good standing, you must annually submit a *No Change Affidavit*. IDOT will send an affidavit form 60 days prior to the firm's next anniversary date.

Should the submitted information change, you are required to notify IDOT's Bureau of Small Business Enterprises within 30 days of the change.

**Note:** Pursuant to 49 CFR Part 26.83(i), whenever there is a change in circumstances affecting your firm's eligibility status, your firm must provide written notification to IDOT within 30 days of the occurrence of the change. If you fail to make timely notification, it may result in the loss of your firm's certification.

If you have any questions, please contact the Bureau of Small Business Enterprises at (217) 782-5490.

Sincerely,

[redacted]

DBE Certification Section
Bureau of Small Business Enterprises

# Illinois Department of Transportation

## Natural Creations Landscaping Inc.

is hereby certified as a

**Disadvantaged Business Enterprise**

This certificate is valid under current firm ownership and operational control only and supercedes any authorization or listing previously issued.

[redacted]

Gary Hannig
Secretary
Illinois Department of Transportation

[redacted]

Carol Lyle
Bureau Chief
Bureau of Small Business Enterprises

Effective the 19th day of January, 2010

DEPARTMENT OF PROCUREMENT SERVICES

CITY OF CHICAGO

MAR 2 6 2018

Jose M. Garcia
Natural Creations Landscaping, Inc.
356 E. Bruce St.
Joliet, IL 60432

Dear Jose M. Garcia:

We are pleased to inform you that **Natural Creations Landscaping, Inc.** has been recertified as a **Minority-Owned Business Enterprise ("MBE")** by the City of Chicago ("City"). This **MBE** certification is valid until **3/15/2023**; however your firm's certification must be revalidated annually. In the past the City has provided you with an annual letter confirming your certification; such letters will no longer be issued. As a consequence, we require you to be even more diligent in filing your **annual No-Change Affidavit 60 days** before your annual anniversary date.

It is now your responsibility to check the City's certification directory and verify your certification status. As a condition of continued certification during the five year period stated above, you must file an annual No-Change Affidavit. Your firm's **annual No-Change Affidavit** is due by **3/15/2019, 3/15/2020, 3/15/2021, and 3/15/2022.** Please remember, you have an affirmative duty to file your **No-Change Affidavit 60 days** prior to the date of expiration. Failure to file your annual No-Change Affidavit may result in the suspension or rescission of your certification.

Your firm's five year certification will expire on **3/15/2023**. You have an affirmative duty to file for recertification **60 days** prior to the date of the five year anniversary date. Therefore, you must file for recertification by **1/15/2023.**

It is important to note that you also have an ongoing affirmative duty to notify the City of any changes in ownership or control of your firm, or any other fact affecting your firm's eligibility for certification **within 10 days** of such change. These changes may include but are not limited to a change of address, change of business structure, change in ownership or ownership structure, change of business operations, gross receipts and or personal net worth that exceed the program threshold. Failure to provide the City with timely notice of such changes may result in the suspension or rescission of your certification. In addition, you may be liable for civil penalties under Chapter 1-22, "False Claims", of the Municipal Code of Chicago.

Please note – you shall be deemed to have had your certification lapse and will be ineligible to participate as a **MBE** if you fail to:

- File your annual No-Change Affidavit within the required time period;

- Provide financial or other records requested pursuant to an audit within the required time period;
- Notify the City of any changes affecting your firm's certification within 10 days of such change; or
- File your recertification within the required time period.

Please be reminded of your contractual obligation to cooperate with the City with respect to any reviews, audits or investigation of its contracts and affirmative action programs. We strongly encourage you to assist us in maintaining the integrity of our programs by reporting instances or suspicions of fraud or abuse to the **City's Inspector General at chicagoinspectorgeneral.org, or 866-IG-TIPLINE (866-448-4754).**

Be advised that if you or your firm is found to be involved in certification, bidding and/or contractual fraud or abuse, the City will pursue decertification and debarment. In addition to any other penalty imposed by law, any person who knowingly obtains, or knowingly assists another in obtaining a contract with the City by falsely representing the individual or entity, or the individual or entity assisted is guilty of a misdemeanor, punishable by incarceration in the county jail for a period not to exceed six months, or a fine of not less than $5,000 and not more than $10,000 or both.

Your firm's name will be listed in the City's Directory of Minority and Women-Owned Business Enterprises in the specialty area(s) of:

**NAICS Code(s):**

**238990 - Brick paver (e.g., driveways, patios, sidewalks) installation**
**561730 - Landscaping Services**
**541320 - Landscape design services**
**484220 - Trucking, specialized freight (except used goods), local**
**237310 - Concrete paving (i.e., highway, road, street, public sidewalk)**
**237310 - Pavement, highway, road, street, bridge or airport runway, construction**

Your firm's participation on City contracts will be credited only toward **Minority-Owned Business Enterprise** goals in your area(s) specialty. While your participation on City contracts is not limited to your area of specialty, credit toward goals will be given only for work that is self-performed and providing a commercially useful function that is done in the approved specialty category.

Thank you for your interest in the City's Minority, Women-Owned Business Enterprise, Veteran-Owned Business Enterprise and Business Enterprise Owned or Operated by People with Disabilities (MBE/WBE/VBE/BEPD) Program.

Sincerely,

[redacted]

Rich Butler
First Deputy Procurement Officer
RB/lj

*Illinois State Toll Highway Authority "ISTHA"*

**DBE FORM 2025 - DBE PARTICIPATION STATEMENT FORM, PART 2**

| CONTRACT # | I-18-4428 |
|---|---|

| DBE FIRM NAME: | Lotus Options, Inc. |
|---|---|
| CIRCLE ALL THAT APPLY: | (DBE) (MBE) WBE SBA 8(A) |

CHECK ALL THAT APPLY:

PRIME _____ JV PARTNER _____ SUBCONTRACTOR X TRUCKER _____ SUPPLIER _____ MANUFACTURER _____

| SUBCONTRACTOR: | TIER 1 (SUB TO PRIME): (Y) N | TIER 2 OR BELOW: Y N | UNDER CONTRACT TO: |
|---|---|---|---|

This form must be completed for EACH disadvantaged business participating in the DBE Utilization Plan. This form is due to the Tollway by 5:00 pm on the fifth calendar day after notification to the prime by the Tollway as low apparent bidder to constructionbid@getipass.com. If additional space is needed, complete an additional form(s) for the firm or attach a detailed information on the DBE firm company letterhead.

| PAY ITEM NO. * | DESCRIPTION: Indicate whether furnish only, or both furnish and install. | QUANTITY | UNIT PRICE | TOTAL CONTRACT AMOUNT ($) | CHECK IF SUPPLIER | TOTAL DBE CREDIT AMOUNT ($) (reduce to 60% of contract amount if firm is a SUPPLIER) |
|---|---|---|---|---|---|---|
| Various | Painting | 1 LS | | See Attached | | |
| | | | | | | |
| | | | | | | |
| | | | | | | |
| | | | | | | |
| | | | TOTALS FOR THIS DBE FIRM: | $341,896.20 | | |

*Contingency Work must not be included under Pay Items and will not be approved toward DBE goal participation until such time as those Pay Items have been confirmed as required work of the contract. Direct Allowance items, including but not limited to Mobilization Item #J5671010, will not be approved within the DBE Utilization Plan. NOTE that these items are not included in the determination of the DBE Goal percentage.

**1. PARTIAL PAY ITEMS:** For any of the above ITEMS that are partial pay items, specifically describe the work and subcontract dollar amount.

**2. COMMITMENT:** The undersigned certify that the information herein is true and correct, and that the DBE listed below has agreed to perform a commercially-useful function in the work of the contract item(s) listed above and to execute a contract to that effect with the Prime Contractor. The undersigned further understand that NO CHANGES to the type or scope of work performed by the DBE may be made without PRIOR WRITTEN APPROVAL and that complete and accurate information regarding actual work performed by the DBE on this contract and the payment thereto must be provided to ISTHA's Department of Diversity and Strategic Development. **The Prime Contractor will not assign any of the contract items listed above to a firm other than the DBE identified below without ISTHA's prior written approval. The Prime Contractor must request, in writing, approval by ISTHA's Diversity and Strategic Development Department of any proposed amendment to the type or scope of work to be performed by the DBE no** [redacted] **he Prime Contractor becomes aware of the circumstances supporting the request. Failure to receive written approval prior to a change in type or scope is a** [redacted] **icipation and can subject the contractor to contract sanctions.**

[redacted] Chief Estimator 6/25/2019

Signature for Prime Contractor — Title — Date

Contact: Tim Polk
Firm Name: Walsh Construction Co. II, LLC
E-mail: tpolk@walshgroup.com
Phone: 312-563-5400
Address: 929 W Adams St. Chicago, IL 60607

[redacted] President 6/25/2019

Signature for DBE Contractor — Title — Date

Contact: Pedro Caraballo
Firm Name: Lotus Options, Inc.
E-mail:
Phone: 312-998-2991
Address: 2 Paxos Drive STE 2W Palos Hills, IL 60465

## THE ILLINOIS STATE TOLL HIGHWAY AUTHORITY (TOLLWAY)

**CONTRACT NO. I-18-4428**

**BRIDGE RECONSTRUCTION (BN 261) BURLINGTON NORTHERN SANTA FE (BNSF) RAILWAY OVER**

**THE TRI-STATE TOLLWAY (I-294)**

**MILE POST 26.6**

**SCHEDULE OF PRICES**

| SP | PAY ITEM NUMBER | DESIGNATION | UNIT | QUANTITY | UNIT PRICE DOLLAR | AMOUNT DOLLAR |
|---|---|---|---|---|---|---|
| * | 50500105 | FURNISHING AND ERECTING STRUCTURAL STEEL (PARTIAL) | L SUM | 1 | $ 258,000 00 | $ 258,000 00 |
| | 52200700 | PRECAST MODULAR RETAINING WALL (PARTIAL) | L SUM | 1 | $ 44,000 00 | $ 44,000 00 |
| | 52200900 | CONCRETE STRUCTURES (RETAINING WALL) (PARTIAL) | L. SUM | 1 0 | $ 24,543 20 | $ 24,543 20 |
| | 56700300 | CONCRETE SEALER | SQ FT | 11,810 | $ 1 30 | $ 15,353.00 |
| | | | | | TOTAL AMOUNT OF CORE WORK: | **$ 341,896.20** |

LEGEND FOR SP COLUMN

- * INDICATES SPECIAL PROVISION
- ** INDICATES TOLLWAY SUPPLEMENTAL SPECIFICATIONS
- *** INDICATES IDOT RECURRING SPECIAL PROVISION
- BDE INDICATES IDOT BDE SPECIAL PROVISION
- GBSP INDICATES IDOT GUIDE BRIDGE SPECIAL PROVISION

LOTUS OPTIONS INC
2 PAXOS DRIVE
PALOS HILLS, IL 60465
[redacted]

SIGNATURE

BY

*Illinois State Toll Highway Authority "ISTHA"*

**DBE FORM 2025 - DBE PARTICIPATION STATEMENT FORM, PART 2/2**

| CONTRACT # | I-18-4428 |
|---|---|

| DBE FIRM NAME: | LOTUS OPTIONS INC |
|---|---|
| CIRCLE ALL THAT APPLY: | DBE MBE WBE SBA 8(A) |

CHECK ALL THAT APPLY:

PRIME ____ JV PARTNER ____ SUBCONTRACTOR ✓ TRUCKER ____ SUPPLIER ____ MANUFACTURER ____

| SUBCONTRACTOR: | TIER 1 (SUB TO PRIME): (Y) N | TIER 2 OR BELOW: Y N | UNDER CONTRACT TO: |
|---|---|---|---|

This form must be completed for EACH disadvantaged business participating in the DBE Utilization Plan.

Attach this form to the DBE Utilization Plan form, DBE Form 2026. If additional space is needed, complete an additional form(s) for the firm or attach a spreadsheet on DBE FIRM letterhead.

| PAY ITEM NO. * | DESCRIPTION: Indicate whether furnish only, or both furnish and install. | QUANTITY | UNIT PRICE | TOTAL CONTRACT AMOUNT ($) | CHECK IF SUPPLIER | TOTAL DBE CREDIT AMOUNT ($) (reduce to 60% of contract amount if firm is a SUPPLIER) |
|---|---|---|---|---|---|---|
| | | | | | | |
| Various | Painting | LS | | See attached | | |
| | | | | | | |
| | | | | | | |
| | | | | | | |
| | | | TOTALS FOR THIS DBE FIRM: | $341,896.20 | | |

REVISED

*Contingency Work must not be included under Pay Items and will not be approved toward DBE goal participation until such time as those Pay Items have been confirmed as required work of the contract. Direct Allowance Items and/or Mobilization Item #,S671010, will not be approved within the DBE Utilization Plan for DBE subcontractors but credit may be allowed if performed as part of specific pay item(s) during contract execution. Reference Sections II, VI.A.2 and VI.B.1 of the Special provision for DBE Participation. NOTE that these items are not included in the determination of the DBE Goal percentage.

1. PARTIAL PAY ITEMS: For any of the above ITEMS that are partial pay items, specifically describe the work and subcontract dollar amoun

2. COMMITMENT: The undersigned certify that the information herein is true and correct, and that the DBE listed below has agreed to perform a commercially-useful function in the work of the contract item(s) listed above and to execute a contract to that effect with the Prime Contractor. The undersigned further understand that NO CHANGES to the type or scope of work performed by the DBE may be made without PRIOR WRITTEN APPROVAL and that complete and accurate information regarding actual work performed by the DBE on this contract and the payment thereto must be provided to ISTHA's Department of Diversity and Strategic Development. **The Prime Contractor will not assign any of the contract items listed above to a firm other than the DBE identified below without ISTHA's prior written approval. The Prime Contractor must request, in writing, approval by ISTHA's Diversity and Strategic Development Department of any proposed amendment to the type or scope of work to be performed by the DBE** no later than three business [redacted] are of the circumstances supporting the request. **Failure to receive written approval prior to a change in type or scope is a violation of the Special Provision for DBE** [redacted] act sanctions.

Signature for Prime Contractor: Chief Estimator — Title

Date: 6/25/2019

Contact: Tim Polk

Phone: 312-296-5523

Firm Name: Walsh Construction Co. II Ltd

Address: 929 W. Adams St. Chicago, IL 60607

Pedro Caraballo — PRESIDENT

Signature for DBE Contractor — Title

Date: 06-25-2019

Contact: PEDRO B. CARABALLO

Phone: 312-886-2991

Firm Name: LOTUS OPTIONS INC

Address: 2 PAXOS DRIVE, STE 2W, PALOS HILLS IL 60465

ISTHA_DBE Form 2025_FRAMEL_ 08 21 2013

CONTRACT #

**THE ILLINOIS STATE TOLL HIGHWAY AUTHORITY (TOLLWAY)**

**CONTRACT NO. I-18-4428**

**BRIDGE RECONSTRUCTION (BN 261) BURLINGTON NORTHERN SANTA FE (BNSF) RAILWAY OVER**

**THE TRI-STATE TOLLWAY (I-294)**

**MILE POST 26.6**

**SCHEDULE OF PRICES**

| SP | PAY ITEM NUMBER | DESIGNATION | UNIT | QUANTITY | UNIT PRICE DOLLAR | AMOUNT DOLLAR |
|---|---|---|---|---|---|---|
| * | 50500105 | FURNISHING AND ERECTING STRUCTURAL STEEL (PARTIAL) | L. SUM | 1 | $ 256,000.00 | $ 256,000.00 |
| | 52200700 | PRECAST MODULAR RETAINING WALL (PARTIAL) | L. SUM | 1 | $ 44,000.00 | $ 44,000.00 |
| | 52200900 | CONCRETE STRUCTURES (RETAINING WALL) (PARTIAL) | L. SUM | 1.0 | $ 24,543.20 | $ 24,543.20 |
| | 58700300 | CONCRETE SEALER | SQ FT | 11,810 | $ 1.30 | $ 15,353.00 |
| | | | | | TOTAL AMOUNT OF CORE WORK: | $ 341,896.20 |

LEGEND FOR SP COLUMN

- * INDICATES SPECIAL PROVISION
- ** INDICATES TOLLWAY SUPPLEMENTAL SPECIFICATIONS
- *** INDICATES IDOT RECURRING SPECIAL PROVISION
- BDE INDICATES IDOT BDE SPECIAL PROVISION
- GBSP INDICATES IDOT GUIDE BRIDGE SPECIAL PROVISION

LOTUS OPTIONS INC
2 PAXOS DRIVE
PALOS HILLS, IL 60465
[redacted]

SIGNATURE

BY

Pedro Caraballo Digitally signed by Pedro Caraballo
Date: 2019.06.27 10:20:16 -05'00'

REVISED

# Unified Certification Program - Search

**Contractor Details**

Browse F.A.Q. Sheet (/UCP/Search/Help)

Print

**Lotus Options Inc.**
Pedro Caraballo
2 Paxos Drive
Palos Hills, IL 60465-0000

**Email:** lotusoptions@gmail.com
**Phone:** 312-998-2991
**Fax:**

**County:** Cook

**Categories:** Construction, Professional

| NAICS | Speciality |
|---|---|
| 238320 - Painting and Wall Covering Contractors | 238320 - Painting and Wall Covering Contractors |
| 541611 - Administrative Management and General Management Consulting Services | 541611 - General Management Consulting Services |
| 541620 - Environmental consulting services | 541620 - Environmental, Health and Safety Consulting |

© 2017 Illinois Department of Transportation

Version: 1.1.27.5458

**DEPARTMENT OF VETERANS AFFAIRS**
**Center for Verification and Evaluation**
**Washington DC 20420**

12/19/2018
In Reply Refer To: **00VE**

Mr. Pedro S. Caraballo
Lotus Options Inc.
DUNS: 043273191
2 Paxos Drive
Palos Hills, IL 60465-2004

Dear Mr. Caraballo:

On behalf of the U.S. Department of Veterans Affairs (VA), Center for Verification and Evaluation (CVE), I am writing to inform you that Lotus Options Inc. has been verified as a Service-Disabled Veteran-Owned Small Business (SDVOSB) and added to the Vendor Information Pages (VIP) at https://www.vip.vetbiz.gov/. Lotus Options Inc. will be eligible to participate in Veterans First Contracting Program opportunities with VA.

**This verification is valid for three (3) years from the date of this letter.** Please retain a copy of this letter to confirm Lotus Options Inc.'s continued program eligibility in accordance with 38 Code of Federal Regulations (CFR) § 74.12. You may reapply 120 days prior to your expiration date by logging in to your VIP profile.

To promote Lotus Options Inc.'s verified status, you may use the following link to download the logo for use on marketing materials and business cards: https://www.vetbiz.gov/cve_completed_s.jpg. In addition, please access the following link for information on the next steps and opportunities for verified businesses: http://www.va.gov/osdbu/verification/whatsNext.asp.

To ensure that Lotus Options Inc. is correctly listed in the Vendor Information Pages, check Lotus Options Inc.'s profile for the verified logo. Please notify us if the logo is not present within 72 hours of receipt of this letter.

While CVE has confirmed that Lotus Options Inc. is presently, as of the issuance of this notice, in compliance with the regulation, Lotus Options Inc. must inform CVE of any changes or other circumstances that would adversely affect its eligibility. Eligibility changes not reported to CVE within 60 days could result in a referral to the Office of Inspector General (OIG), a referral to the Debarment and Suspension Committee, and the initiation of cancellation proceedings—all of which could result in Lotus Options Inc. being removed from the VIP Verification Program.

Please be advised all verified businesses may be required to participate in one or more post-verification audits at CVE's discretion. Additionally, this letter and other information pertaining to Lotus Options Inc.'s verification application may be subject to Freedom of Information Act (FOIA) requests. However, FOIA disclosures include exceptions regarding the personal privacy of individuals, and VA policy similarly provides limitations on the release of individual records.

If Lotus Options Inc. receives a negative size determination from the U.S. Small Business Administration (SBA), CVE must act in accordance with 38 CFR § 74.2(e). Also note, if at any time Lotus Options Inc. discovers that it fails to meet the size standards for any NAICS Code(s) listed on its VIP profile, CVE requires such NAICS Code(s) be removed within five (5) business days. If the NAICS Code(s) are not removed within the allotted five (5) business days, CVE may request SBA conduct a formal size determination. In addition, CVE may initiate a referral to OIG, a referral to the Debarment and Suspension Committee, and pursue cancellation proceedings. All of the aforementioned referrals and procedures could result in Lotus Options Inc. being removed from the VIP Verification Program.

Thank you for your service to our country and for continuing to serve America through small business ownership.

Sincerely,

Thomas McGrath
Director
Center for Verification and Evaluation

# OBDCR

*Office of Business Diversity & Community Relations*

## Lotus Options, Inc.

## is hereby certified as a

## DISADVANTAGED BUSINESS ENTERPRISE

**This certificate is valid under current firm ownership and operational control and supersedes any authorization or listing previously issued.**

238320, 541611, 541620

**NAICS Code(s):** Description of company products/services as defined by the North American Industry Classification System (NAICS)

[redacted]

**Janice R. Thomas, CPPB**
**Senior Division Director**
**Office of Business Diversity & Community Relations**

2/7/2019

**Date**

DISADVANTAGED BUSINESS ENTERPRISE
Metra®
CERTIFIED

**From**: State of Illinois Central Management Services
**Sent**: Friday, August 17, 2018 4:39 PM
**To**: lotusoptions@gmail.com
**Subject**: CMS: Certification Approved

Pedro Caraballo
Lotus Options Inc.
2 Paxos Drive
Palos Hills, IL 60465

Dear Pedro Caraballo:

Re: Minority Business Enterprise (MBE)
Certification Term Expires: August 17, 2019

Congratulations! After reviewing the information that you supplied, we are pleased to inform you that your firm has been granted certification under the Business Enterprise Program (BEP) for Minority, Females, and Persons with Disabilities.

This certification is in effect with the State of Illinois as specified on the above certification term expiration date.

At least 15 days prior to the anniversary date of your certification, you will be notified by BEP to update your certification as a condition of continued certification. In addition, should any changes occur in ownership and/or control of the business or other changes affecting the firm's operations, you are required to notify BEP within two weeks. Failure to notify our office of changes will result in decertification of your firm.

Please be advised, while this certification does not guarantee you will receive a State contract, it does assure your firm the opportunity to participate in the State's procurement process. Your firm's participation on State contracts will be credited only toward Minority Business Enterprise (MBE) goals in your area(s) of specialty. Your firm's name will appear in the State's Directory as a certified vendor with the Business Enterprise Program in the specialty area(s) of:

NIGP 91461: PAINTING AND WALLPAPERING

Please visit our website at www.opportunities.illinois.gov to obtain information about current and upcoming procurement opportunities, contracts, forms, and also to register to receive email alerts when the State is preparing to purchase a product or service you may provide.

Thank you for your participation in the Business Enterprise Program. We welcome your participation and wish you continued success.

Sincerely,

Carlos Gutiérrez
Certification Manager
Business Enterprise Program

This message was sent to: lotusoptions@gmail.com
Sent on: 8/17/2018 4:39:06 PM
System ReferenceID: 67169311

*Illinois State Toll Highway Authority "ISTHA"*

**DBE FORM 2025 - DBE PARTICIPATION STATEMENT FORM, PART 2**

| CONTRACT # | I-18-4428 |
|---|---|

| DBE FIRM NAME: | CR Schmidt, Inc. |
|---|---|
| CIRCLE ALL THAT APPLY: | DBE ~~MBE~~ WBE SBA 8(A) |

**CHECK ALL THAT APPLY:**

PRIME _____ JV PARTNER _____ SUBCONTRACTOR X TRUCKER _____ SUPPLIER _____ MANUFACTURER _____

| SUBCONTRACTOR: | TIER 1 (SUB TO PRIME): (Y) N | TIER 2 OR BELOW: Y N | UNDER CONTRACT TO: |
|---|---|---|---|

This form must be completed for EACH disadvantaged business participating in the DBE Utilization Plan. This form is due to the Tollway by 5:00 pm on the fifth calendar day after notification to the prime by the Tollway as low apparent bidder to constructionbid@getipass.com. If additional space is needed, complete an additional form(s) for the firm or attach a detailed information on the DBE firm company letterhead.

| PAY ITEM NO. * | DESCRIPTION: Indicate whether furnish only, or both furnish and install. | QUANTITY | UNIT PRICE | TOTAL CONTRACT AMOUNT ($) | CHECK IF SUPPLIER | TOTAL DBE CREDIT AMOUNT ($) (reduce to 60% of contract amount if firm is a SUPPLIER) |
|---|---|---|---|---|---|---|
| 52200800 | Segmental Concrete Block Wall | 3,912 | $42.00 | $164,304.00 | | |
| | | | | | | |
| | | | | | | |
| | | | | | | |
| | | | | | | |
| | | | TOTALS FOR THIS DBE FIRM: | $164,304.00 | | |

*Contingency Work must not be included under Pay Items and will not be approved toward DBE goal participation until such time as those Pay Items have been confirmed as required work of the contract. Direct Allowance items, including but not limited to Mobilization Item #JS671010, will not be approved within the DBE Utilization Plan. NOTE that these items are not included in the determination of the DBE Goal percentage.

1. **PARTIAL PAY ITEMS**: For any of the above ITEMS that are partial pay items, specifically describe the work and subcontract dollar amount.

2. **COMMITMENT:** The undersigned certify that the information herein is true and correct, and that the DBE listed below has agreed to perform a commercially-useful function in the work of the contract item(s) listed above and to execute a contract to that effect with the Prime Contractor. The undersigned further understand that NO CHANGES to the type or scope of work performed by the DBE may be made without PRIOR WRITTEN APPROVAL and that complete and accurate information regarding actual work performed by the DBE on this contract and the payment thereto must be provided to ISTHA's Department of Diversity and Strategic Development. **The Prime Contractor will not assign any of the contract items listed above to a firm other than the DBE identified below without ISTHA's prior written approval. The Prime Contractor must request, in writing, approval by ISTHA's Diversity and Strategic Development Department of any proposed amendment to the type or scope of work to be performed by the DBE** no later than three business days from the date the Prime Contractor becomes aware of the circumstances supporting the request. **Failure to receive written approval prior to a change in type or scope is a [redacted]tion and can subject the contractor to contract sanctions.**

[redacted] Chief Estimator 6/25/2019

Signature for Prime Contractor — Title — Date

Contact: Tim Polk

Firm Name: Walsh Construction Co. II, LLC

E-mail: tpolk@walshgroup.com

Phone: 312-563-5400

Address: 929 W Adams St. Chicago, IL 60607

[redacted] President 6.27.19

Signature for DBE Contractor — Title — Date

Contact: **John Lockett**

Firm Name: CR Schmidt, Inc.

E-mail: **john@schmidt.com**

Phone: 630-293-7030

Address: 3S215 Talbot Avenue Warrenville, IL 60555

# PROPOSAL #: 3994

Revision #:

Submitted To:
General Contractor(s)

CRS Contact: John Lockett
CRS Email: john@crschmidt.com

Project Manager(s)

CRS Estimator: Dennis Organ
Est. Email: dennis@crschmidt.com

Project: Tollway 4428 BNSF

Location: Hinsdale

Bid Items: Segmental Concrete Block Wall

## Scope of Work Contractor shall furnish and install hardscape(s) as follows.

6" CA7 gravel base for wall
8" Allan Block Classic wall units w/ 4" caps in Natural/Gray color
Geo-Grid reinforcement of wall
CA7 for 12" Drainage Zones & Geo-Grid Reinforced Zones
4" Drain Tile for length of wall
Engineered Stamp Drawings
2019 Prevailing wages

## Exclusions Contractor EXCLUDES items as follows.

Excavation & Wall Location Staking
Dewatering
Sales Tax

## Project Specific Notes/Options

Bid per sheets 347, 348, 360 & 361 Dated 5.9.19

## Pricing Schedule

| | Qty | Unit Price | Price Ext. |
|---|---|---|---|
| 52200800 Segmental Conc. Block Wall/SF | 3,912 | $42.00 | $164,304.00 |
| | | | $0.00 |
| | | | $0.00 |
| | | | $0.00 |
| | | | $0.00 |
| | | | $0.00 |
| | | ITEM TOTAL | $164,304.00 |

35215 TALBOT AVENUE
WARRENVILLE, IL 60555
PHONE: 630.293.5885
FAX: 630.293.7030
EMAIL: info@crschmidt.com
WEB: www.crschmidt.com

# PROPOSAL #.: 3994 Revision 0

## Revision Notes

## Standard Notes & Language

C.R. Schmidt, Inc. is a certified WBE/FBE firm with the State of Illinois CMS.
Pricing is valid for 30 days from issuance.
Pricing is valid for year in which it was issued unless noted otherwise.
Bonds and permits are not included unless noted otherwise.
Final grading of surfaces prepared by others is not included.
Traffic and pedestrian control are not included.
Geotechnical, soil and aggregate testing and surveying are not included.
Temporary and permanent fencing is not included. Sleeves for future posts must be coordinated with CRS at time of retaining wall installation.
Retaining wall backfill will be placed in reinforced zone only and 12" below the top of cap elevation. No additional backfilling is included.
Dewatering of saturated work areas is not included.
Winter work is explicitly excluded from all types of hardscape work.

**IN WITNESS WHEREOF,** the parties hereto have caused this proposal to become effective as of the date indicated below.

| General Contractor(s) | C.R. Schmidt, Inc. |
|---|---|
| | [redacted] |
| By: _____ | By: Olivia Lockett |
| Name: _____ | Position: President |
| Dated: _____ | Dated: _____ |

# Unified Certification Program - Search

**Contractor Details**

Browse F.A.Q. Sheet (/UCP/Search/Help)

Print

**C.R. Schmidt, Inc.**
Olivia Lockett
3S215 Talbot Avenue
Warrenville, IL 60555-0000

**Email:** olivia@crschmidt.com
**Phone:** 630-293-5885
**Fax:** 630-293-7030

**County:** DuPage

**Categories:** Construction

| NAICS | Speciality |
|---|---|
| 238140 - Masonry Contractors | 238140 - Block Retaining Walls |
| 238990 - All Other Specialty Trade Contractors | 238990 - Hardscape Installation Paver of Bricks |

© 2017 Illinois Department of Transportation

Version: 1.1.27.5458

Metra

547 W. Jackson Boulevard, Chicago, IL 60661 312.322.6900 metrarail.com

June 7, 2019

Ms. Olivia Lockett
C.R. Schmidt, Inc.
3S215 Talbot Avenue
Warrenville, IL 60555

Dear Ms. Lockett:

Metra has reviewed your annual *No Change Affidavit* and supporting documentation and is pleased to inform you that your firm continues to meet the Disadvantaged Business Enterprise (DBE) program certification eligibility standards set forth in 49 CFR Subpart D 26.61. Your next No Change Affidavit is due **June 3, 2020.**

This certification allows your firm to participate as a DBE in the Illinois Unified Certification Program (IL UCP). The participating agencies include the Illinois Department of Transportation, the City of Chicago, the Chicago Transit Authority, Metra and Pace.

If there is any change in your certification that affect your ability to meet size standards, disadvantaged status, ownership, or control requirements or any material change in the information provided in your initial application, you must provide written notification to this agency within thirty (30) days of the occurrence of the change. Failure to provide this information is grounds for removal of certification based on failure to cooperate pursuant to 49 CFR 26.109(c).

Your firms name will appear in the IL UCP directory, which is used by prime contractors/consultants, as well as other agencies, to solicit participation of DBE firms. The Directory can be accessed at www.metrarail.com under the Business Diversity DBE link. Your firm's name will appear in the IL UCP DBE Directory under the following:

NAICS Code: 238140, 238990

Specialty: 238140 – Block Retaining Walls
238990 – Hardscape Installation Paver of Bricks

Your participation on contracts will only be credited toward DBE contract goals when your firm performs in a Commercially Useful Function (CUF) in its approved area(s) of specialty.

[redacted]

Janice R. Thomas, CPPB
Senior Division Director
Office of Business Diversity & Community Relations

JRT:ms/kb

Metra is the registered service mark for the Northeast Illinois Regional Commuter Railroad Corporation

DEPARTMENT OF PROCUREMENT SERVICES

CITY OF CHICAGO

November 21, 2018

Olivia Lockett
C.R. Schmidt, Inc.
3S215 Talbot Avenue
Warrenville, IL 60555
E-mail: olivia@crschmidt.com

Dear Ms.Lockett:

This letter is to inform you that the City of Chicago has extended your status as a **Women-Owned Business Enterprise (WBE) until December 21, 2019.** We are providing this extension to allow enough time for you to provide any additional documentation that your application may be missing and/or for our office to complete our review of all of the submitted documents.

This extension does not guarantee eligibility in the program but will act as a courtesy extension until processing has been completed.

Please present this letter and a copy of your last certification letter as evidence of your certification with bid document submittals as needed.

If you have any questions, please feel free to contact our office at (312) 744-4900.

Sincerely,

[redacted]

Désirée M. Otkins
Manager of Certification

DMO/ll

*Illinois State Toll Highway Authority "ISTHA"*

**DBE FORM 2025 - DBE PARTICIPATION STATEMENT FORM, PART 2**

| CONTRACT # | ISTHA #I-18-4428 |
|---|---|

| DBE FIRM NAME | AREA EQUIPMENT, INC. |
|---|---|
| CHECK ALL THAT APPLY | DBE DABE WBE SBA 8(A) |

| CHECK ALL THAT APPLY | | | | | |
|---|---|---|---|---|---|
| PRIME ____ | JV PARTNER ____ | SUBCONTRACTOR X | TRUCKER ____ | SUPPLIER ____ | MANUFACTURER ____ |

| SUBCONTRACTOR | TIER 1 (SUB TO PRIME): X N | TIER 2 OR BELOW: Y N | UNDER CONTRACT TO: |
|---|---|---|---|

This form must be completed for EACH disadvantaged business participating in the DBE Utilization Plan. This form is due to the Tollway by 5:00 pm on the fifth calendar day after notification to the prime by the Tollway as low apparent bidder to constructionbid@getipass.com. If additional space is needed, complete an additional form(s) for the firm or attach a detailed information on the DBE firm company letterhead.

| ITEM NO. | DESCRIPTION (Indicate work for partial pay items) | QUANTITY | UNIT PRICE | TOTAL DBE PAY AMOUNT | CHECK IF SUPPLIER | AREA DESCRIPTION (Indicate subcontract amount for partial pay items) |
|---|---|---|---|---|---|---|
| VARIOUS | Erosion Control Stone / Misc | LCS | | (SEE ATTACHED) | | |
| | | | | | | |
| | | | | | | |
| | | | | | | |
| | | | TOTALS FOR THIS DBE FIRM: | 320241.90 | | |

*Contingency Work must not be included under Pay Items and will not be approved toward DBE goal participation until such time as those Pay Items have been confirmed as required work of the contract. Direct Allowance items, including but not limited to Mobilization Item #JS671010, will not be approved within the DBE Utilization Plan. NOTE that these items are not included in the determination of the DBE Goal percentage.

1. **PARTIAL PAY ITEMS:** For any of the above ITEMS that are partial pay items, specifically describe the work and subcontract dollar amount.

2. **COMMITMENT:** The undersigned certify that the information herein is true and correct, and that the DBE listed below has agreed to perform a commercially-useful function in the work of the contract item(s) listed above and to execute a contract to that effect with the Prime Contractor. The undersigned further understand that NO CHANGES to the type or scope of work performed by the DBE may be made without PRIOR WRITTEN APPROVAL and that complete and accurate information regarding actual work performed by the DBE on this contract and the payment thereto must be provided to ISTHA's Department of Diversity and Strategic Development. **The Prime Contractor will not assign any of the contract items listed above to a firm other than the DBE identified below without ISTHA's prior written approval. The Prime Contractor must request, in writing, approval by ISTHA's Diversity and Strategic Development Department of any proposed amendment to the type or scope of work to be performed by the DBE** no later than three business days from the date the Prime Contractor becomes aware of the circumstances supporting the request. **Failure to receive written approval prior to a change in type or scope is a** [redacted] **ticipation and can subject the contractor to contract sanctions.**

[redacted] Chief Estimator 6/25/2019 [redacted] PRESIDENT 6/24/19

Title Date Title Date

| | | | |
|---|---|---|---|
| Contact: | Jim Polk | Contact: | JULIANNE M. DOAN |
| Firm Name: | Walsh Construction Co. II LLC | Firm Name: | AREA EQUIPMENT, INC. |
| E-mail: | TPolk@WalshGroup.com | E-mail: | AREA@AREAEQUIPMENT.NET |
| Phone: | 312-563-5400 | Phone: | 630-834-5908 |
| Address: | 929 W. Adams Street, Chicago, IL 60607 | Address: | 150 E. HILL STREET, VILLA PARK, IL 60181 |

## THE ILLINOIS STATE TOLL HIGHWAY AUTHORITY (TOLLWAY)

**CONTRACT NO. I-18-4428**

**BRIDGE RECONSTRUCTION (BN 261) BURLINGTON NORTHERN SANTA FE (BNSF) RAILWAY OVER**

**THE TRI-STATE TOLLWAY (I-294)**

**MILE POST 28.6**

**SCHEDULE OF PRICES**

| SP | PAY ITEM NUMBER | DESIGNATION | UNIT | QUANTITY | UNIT PRICE DOLLAR | AMOUNT DOLLAR |
|---|---|---|---|---|---|---|
| * | 50500105 | FURNISHING AND ERECTING STRUCTURAL STEEL (PARTIAL) | L. SUM | 1 | $ 2,839,000.00 | $ 2,839,000.00 |
| | 52100400 | STEEL BEARING ASSEMBLY (PARTIAL) | EACH | 16 | $ 350.00 | $ 5,600.00 |
| * | X5210015 | ELASTOMERIC BEARING ASSEMBLY, TYPE I (SPECIAL) (PARTIAL) | EACH | 64 | $ 350.00 | $ 22,400.00 |
| * | X5210025 | ELASTOMERIC BEARING ASSEMBLY, TYPE II (SPECIAL) (PARTIAL) | EACH | 16 | $ 350.00 | $ 5,600.00 |
| * | X7330086 | FURNISH AND INSTALL WALKWAY (PARTIAL) | FOOT | 3,917 | $ 84.20 | $ 329,811.40 |
| | | | | | TOTAL AMOUNT OF CORE WORK: | $ 3,202,411.40 |

LEGEND FOR SP COLUMN

- * INDICATES SPECIAL PROVISION
- ** INDICATES TOLLWAY SUPPLEMENTAL SPECIFICATIONS
- *** INDICATES IDOT RECURRING SPECIAL PROVISION
- BDE INDICATES IDOT BDE SPECIAL PROVISION
- GBSP INDICATES IDOT GUIDE BRIDGE SPECIAL PROVISION

AREA EQUIPMENT INC.
150 E. HILL ST

[redacted]

SIGNATURE
Julianne M. Doan
BY

DEPARTMENT OF PROCUREMENT SERVICES

CITY OF CHICAGO

MAY 1 4 2019

Julianne Doan
Area Equipment, Inc.
150 E. Hill Street
Villa Park, IL 60181

Dear Ms. Doan:

The City of Chicago has reviewed your annual *No Change Affidavit* and supporting documentation and is pleased to inform you that your firm, **Area Equipment, Inc.**, continues to meet the **Disadvantaged Business Enterprise ("DBE")** certification program eligibility standards set forth in 49 CFR Part 26. Your next No Change Affidavit is due **June 1, 2020.**

This certification allows your firm to participate as a **DBE** in the Illinois Unified Certification Program (IL UCP). The participating agencies include the City of Chicago, Illinois Department of Transportation, the Chicago Transit Authority, Metra and Pace.

If there is any change in circumstances during the course of your certification period that affect your ability to meet size, disadvantaged status, ownership, or control requirements or any material change in the information provided in your initial application, you must provide written notification to this agency within **thirty (30) days** of the occurrence of the change. Failure to provide this information is a ground for denial of certification based on failure to cooperate pursuant to 49 CFR 26.109(c).

Your firm's name will appear in the IL UCP DBE Directory under the following category name(s):

**NAICS Code(s):**
**238120 – Structural Steel and PreCast Concrete Contractors**

The Directory is used by prime contractors/consultants, as well as other agencies, to solicit participation of DBE, and ACDBE firms. The Directory can be accessed on the Internet at https://webapps.dot.illinois.gov/UCP/ExternalSearch.

# Unified Certification Program - Search

**Contractor Details**

Browse F.A.Q. Sheet (/UCP/Search/Help)

Print

**Area Equipment, Inc.**
Julianne Doan
150 E. Hill Street
Villa Park, IL 60181-0000

**Email:** area@areaequipment.net
**Phone:** 630-834-5908
**Fax:** 630-834-5929

**County:** DuPage

**Categories:** Construction

| NAICS | Speciality |
|---|---|
| 238120 - Structural Steel and Precast Concrete Contractors | 238120 Structural Steel and Precast Concrete Contractors |

© 2017 Illinois Department of Transportation

Version: 1.1.27.5458

Illinois Tollway — *Illinois State Toll Highway Authority "ISTHA"*

**DBE FORM 2025 - DBE PARTICIPATION STATEMENT FORM, PART 2**

| CONTRACT # | I-18-4428 |
|---|---|

| DBE FIRM NAME: | SANCO TRAFFIC CONTROL |
|---|---|
| CIRCLE ALL THAT APPLY: | DBE ☑ MBE ☐ WBE ☐ SBA 8(A) ☐ |

CHECK ALL THAT APPLY:

PRIME _____ JV PARTNER _____ SUBCONTRACTOR X _____ TRUCKER _____ SUPPLIER _____ MANUFACTURER _____

| SUBCONTRACTOR: | TIER 1 (SUB TO PRIME): Y ☐ N ☑ | TIER 2 OR BELOW: Y ☑ N ☐ | UNDER CONTRACT TO: TRAFIC SERVICES, INC |
|---|---|---|---|

This form must be completed for EACH disadvantaged business participating in the DBE Utilization Plan. This form is due to the Tollway by 5:00 pm on the fifth calendar day after notification to the prime by the Tollway as low apparent bidder to constructionbid@getipass.com.
If additional space is needed, complete an additional form(s) for the firm or attach a spreadsheet on DBE firm letterhead.

| PAY ITEM NO. * | DESCRIPTION: Indicate whether furnish only, or both furnish and install. | QUANTITY | UNIT PRICE | TOTAL CONTRACT AMOUNT ($) | CHECK IF SUPPLIER | TOTAL DBE CREDIT AMOUNT ($) (reduce to 60% of contract amount if firm is a SUPPLIER) |
|---|---|---|---|---|---|---|
| Various | SEE ATTACHED | 1 LS | | $99,767.85 | | |
| | | | | | | |
| | | | | | | |
| | | | | | | |
| | | | | | | |
| | | | TOTALS FOR THIS DBE FIRM: | $99,767.85 | | 0 |

*Contingency Work must not be included under Pay Items and will not be approved toward DBE goal participation until such time as those Pay Items have been confirmed as required work of the contract. Direct Allowance Items, including but not limited to Mobilization Item #IS671010, will not be approved within the DBE Utilization Plan. NOTE that these Items are not included in the determination of the DBE Goal percentage.

1. **PARTIAL PAY ITEMS:** For any of the above ITEMS that are partial pay items, specifically describe the work and subcontract dollar amount.

2. **COMMITMENT:** The undersigned certify that the information herein is true and correct, and that the DBE listed below has agreed to perform a commercially-useful function in the work of the contract item(s) listed above and to execute a contract to that effect with the Prime Contractor. The undersigned further understand that NO CHANGES to the type or scope of work performed by the DBE may be made without PRIOR WRITTEN APPROVAL and that complete and accurate information regarding actual work performed by the DBE on this contract and the payment thereto must be provided to ISTHA's Department of Diversity and Strategic Development. The Prime Contractor will not assign any of the contract items listed above to a firm other than the DBE identified below without ISTHA's prior written approval. The Prime Contractor must request, in writing, approval by ISTHA's Diversity and Strategic Development Department of any proposed amendment to the type or scope of work to be performed by the DBE no later than three business days from the date the Prime Contractor becomes aware of the circumstances supporting the request. Failure to receive written approval prior to a change in type or scope is a violation of the Special Provision for DBE Participation and can subject the contractor to contract sanctions.

[redacted] Chief Estimator 6/25/2019
Signature for Prime Contractor — Title

Contact: Jim Polk
Firm: Walsh Construction Co. II LLC
Email: tpolk@walshgroup.com
Phone: 312-563-5400
Address: 929 W. Adams St. Chicago, IL 60607

[redacted] General Manager — 5/24/19
Signature for DBE Contractor — Title — Date

Contact: BRANDON FRANCIS
Firm: SANCO TRAFFIC CONTROL
Email: BRANDONFRANCIS@SANCOTRAFFIC.COM
Phone: 630-846-3137
Address: 200 QUAKER RD, ROCKFORD IL 61104

## THE ILLINOIS STATE TOLL HIGHWAY AUTHORITY (TOLLWAY)

**CONTRACT NO. I-18-4428**

**BRIDGE RECONSTRUCTION (BN 261) BURLINGTON NORTHERN SANTA FE (BNSF) RAILWAY OVER**

**THE TRI-STATE TOLLWAY (I-294)**

**MILE POST 26.6**

**SCHEDULE OF PRICES**

| SP | PAY ITEM NUMBER | DESIGNATION | UNIT | QUANTITY | UNIT PRICE DOLLAR | AMOUNT DOLLAR |
|---|---|---|---|---|---|---|
| BDE | 70300904 | PAVEMENT MARKING TAPE, TYPE IV 4" | FOOT | 94,077 | $ 0.95 | $ 89,373.15 |
| BDE | X7030005 | TEMPORARY PAVEMENT MARKING REMOVAL | SQ FT | 31,359 | $ 0.30 | $ 9,407.70 |
| | | BOND | L. SUM | 1 | $ 987.00 | $ 987.00 |
| | | | | | TOTAL AMOUNT OF CORE WORK: | $ 99,767.85 |

LEGEND FOR SP COLUMN

- * INDICATES SPECIAL PROVISION
- ** INDICATES TOLLWAY SUPPLEMENTAL SPECIFICATIONS
- *** INDICATES IDOT RECURRING SPECIAL PROVISION
- BDE INDICATES IDOT BDE SPECIAL PROVISION
- GBSP INDICATES IDOT GUIDE BRIDGE SPECIAL PROVISION

SANCO TRAFFIC CONTROL
200 QUAKER ROAD
ROCKFORD, IL 61104

[redacted] 7/1/19

SIGNATURE

Brandon Francis

BY

# Unified Certification Program - Search

**Contractor Details**

Browse F.A.Q. Sheet (/UCP/Search/Help)

Print

**Sanco Services, Inc. d/b/a Sanco Traffic Control**
Robert Sanches
200 Quaker Rd.
Rockford, IL 61104

**Email:** sancoone@comcast.net
**Phone:** (815) 961-0365
**Fax:** (815) 961-0865

**County:** Winnebago

**Categories:** Construction, Miscellaneous, Supplier

| NAICS | Speciality |
|---|---|
| 237310-Highway, Street, & Bridge Construction | 237310- TEMPORARY BARRIER WALL INSTALLATION |
| 238210-Electrical Contractors | 238210- VIDEO TRAFFIC CONTROL SURVEILLANCE - INSTALLATION |
| 334290-Other Communications Equipmwnt Manufacturing | 334290- MATERIALS: MISC. TRAFFIC CONTROL SIGNS |
| 423510-Metal Service Centers and Other Metal Merchant Wholesalers | 423510- REG DEALER/AUTHORIZED DISTR - PIPE |
| 561990-All Other Support Services | 561990- TRAFFIC CONTROL |

© 2017 Illinois Department of Transportation

Version: 1.1.27.5458

**Illinois Department of Transportation**
**Office of Business & Workforce Diversity**
**2300 South Dirksen Parkway / Springfield, Illinois 62764**

April 12, 2019

CERTIFIED-RETURN RECEIPT REQUESTED

Mr. Robert Sanches
Sanco Services, Inc.
d/b/a Sanco Traffic Control
200 Quaker Rd.
Rockford, IL 61104

Dear Mr. Sanches:

The Illinois Department of Transportation (IDOT) has approved the *No Change Affidavit* for Sanco Services, Inc. d/b/a Sanco Traffic Control and determined that the firm continues to meet DBE eligibility standards to perform work towards DBE goals.

To remain certified and in good standing, you must annually submit a *No Change Affidavit*. IDOT will send an affidavit form 60 days prior to the firm's next anniversary date.

Should the submitted information change, you are required to notify IDOT's Bureau of Small Business Enterprises within 30 days of the change.

**Note:** Pursuant to 49 CFR Part 26.83(i), whenever there is a change in circumstances affecting your firm's eligibility status, your firm must provide written notification to IDOT within 30 days of the occurrence of the change. If you fail to make timely notification, it may result in the loss of your firm's certification.

If you have any questions, please contact the Bureau of Small Business Enterprises at (217) 782-5490.

Sincerely,

[redacted]

DBE Certification Section
Bureau of Small Business Enterprises

Illinois State Toll Highway Authority "ISTHA"

DBE FORM 2025 - DBE PARTICIPATION STATEMENT FORM, PART 2

| CONTRACT # | I-18-4428 |
|---|---|

| DBE FIRM NAME: | Pine Waterproofing and Sealant, Inc. |
|---|---|
| CIRCLE ALL THAT APPLY: | DBE [✓] MBE [ ] WBE [ ] SBA 8(A) [ ] |

CHECK ALL THAT APPLY:

PRIME ____ JV PARTNER ____ SUBCONTRACTOR Y ____ TRUCKER ____ SUPPLIER ____ MANUFACTURER ____

| SUBCONTRACTOR: | TIER 1 (SUB TO PRIME): Y [X] N [ ] | TIER 2 OR BELOW: Y [ ] N [ ] | UNDER CONTRACT TO: |
|---|---|---|---|

This form must be completed for EACH disadvantaged business participating in the DBE Utilization Plan. This form is due to the Tollway by 5:00 pm on the fifth calendar day after notification to the prime by the Tollway as low apparent bidder to constructionbid@getipass.com.

If additional space is needed, complete an additional form(s) for the firm or attach a spreadsheet on DBE firm letterhead.

| PAY ITEM NO. * | DESCRIPTION: Indicate whether furnish only, or both furnish and install. | QUANTITY | UNIT PRICE | TOTAL CONTRACT AMOUNT ($) | CHECK IF SUPPLIER | TOTAL DBE CREDIT AMOUNT ($) (reduce to 60% of contract amount if firm is a SUPPLIER) |
|---|---|---|---|---|---|---|
| VARIOUS | WATERPROOFING WORK | LS | (SEE ATTACHED) | | | |
| | | | | | | |
| | | | | | | |
| | | | | | | |
| | TOTALS FOR THIS DBE FIRM: | | | 460,073.00 | | |

*Contingency Work must not be included under Pay Items and will not be approved toward DBE goal participation until such time as those Pay Items have been confirmed as required work of the contract. Direct Allowance items, including but not limited to Mobilization Item #JS671010, will not be approved within the DBE Utilization Plan. NOTE that these items are not included in the determination of the DBE Goal percentage.

1. PARTIAL PAY ITEMS: For any of the above ITEMS that are partial pay items, specifically describe the work and subcontract dollar amount.

2. COMMITMENT: The undersigned certify that the information herein is true and correct, and that the DBE listed below has agreed to perform a commercially-useful function in the work of the contract item(s) listed above and to execute a contract to that effect with the Prime Contractor. The undersigned further understand that NO CHANGES to the type or scope of work performed by the DBE may be made without PRIOR WRITTEN APPROVAL and that complete and accurate information regarding actual work performed by the DBE on this contract and the payment thereto must be provided to ISTHA's Department of Diversity and Strategic Development. The Prime Contractor will not assign any of the contract items listed above to a firm other than the DBE identified below without ISTHA's prior written approval. The Prime Contractor must request, in writing, approval by ISTHA's Diversity and Strategic Development Department of any proposed amendment to the type or scope of work to be performed by the DBE no later than three business days from the date the Prime Contractor becomes aware of the circumstances supporting the request. Failure to receive written approval [redacted] of the Special Provision for DBE Participation and can [redacted]s.

[redacted] Chief Estimator 6/25/2019

Signature for Prime Contractor — Title

Contact: Jim Polk

Firm: Walsh Construction Co. II, LLC

Email: JPolk@walshgroup.com

Phone: 312-563-5900

Address: 929 W. Adams Street Chicago IL 60607

[redacted] President 6/04/2019

Signature for DBE Contractor — Title — Date

Contact: Debbie Pine

Firm: Pine Waterproofing and Sealant, Inc.

Email: pinewaterproofing@comcast.net

Phone: 847-678-5700

Address: 10209 Pacific Ave, Franklin Park, IL 60131

ISTHA_DBE Form 2025_TEMPLATE_042018

**THE ILLINOIS STATE TOLL HIGHWAY AUTHORITY (TOLLWAY)**

**CONTRACT NO. I-18-4428**

**BRIDGE RECONSTRUCTION (BN 261) BURLINGTON NORTHERN SANTA FE (BNSF) RAILWAY OVER**

**THE TRI-STATE TOLLWAY (I-294)**

**MILE POST 26.6**

**SCHEDULE OF PRICES**

| SP | PAY ITEM NUMBER | DESIGNATION | UNIT | QUANTITY | UNIT PRICE DOLLAR | AMOUNT DOLLAR |
|---|---|---|---|---|---|---|
| GBSP | X0900064 | MEMBRANE WATERPROOFING FOR BURIED STRUCTURES | SQ YD | 2,542 | $ 40.50 | $ 102,951.00 |
| * | JI408100 | ASPHALT DAMP PROOFING | SQ YD | 903 | $ 103.82 | $ 93,749.46 |
| * | JI580001 | RAILROAD DECK WATERPROOFING | SQ FT | 18,884 | $ 13.55 | $ 255,878.20 |
| * | JI802791 | JUNCTION CHAMBER, LOCATION 1 (PARTIAL) | L SUM | 1 | $ 7,494.34 | $ 7,494.34 |
| | | | | | TOTAL AMOUNT OF CORE WORK: | $ 460,073.00 |

LEGEND FOR SP COLUMN

- * INDICATES SPECIAL PROVISION
- ** INDICATES TOLLWAY SUPPLEMENTAL SPECIFICATIONS
- *** INDICATES IDOT RECURRING SPECIAL PROVISION
- BDE INDICATES IDOT BDE SPECIAL PROVISION
- GBSP INDICATES IDOT GUIDE BRIDGE SPECIAL PROVISION

PINE WATERPROOFING AND SEALANT, INC.
10209 PACIFIC AVENUE
FRANKLIN PARK, IL 60131

[redacted] President

SIGNATURE Debbie Pine

BY

DEPARTMENT OF PROCUREMENT SERVICES

CITY OF CHICAGO

MAY 31 2019

Debbie Pine
Pine Waterproofing and Sealant, Inc.
10209 Pacific Ave.
Franklin Park, IL 60131

Dear Ms. Pine:

The City of Chicago has reviewed your annual *No Change Affidavit* and supporting documentation and is pleased to inform you that your firm, **Pine Waterproofing and Sealant, Inc.**, continues to meet the **Disadvantaged Business Enterprise ("DBE")** certification program eligibility standards set forth in 49 CFR Part 26 in the areas of specialty work below. Your next No Change Affidavit is due **April 15, 2020.**

This certification allows your firm to participate as a DBE in the Illinois Unified Certification Program (IL UCP). The participating agencies include the City of Chicago, Illinois Department of Transportation, the Chicago Transit Authority, Metra and Pace.

If there is any change in circumstances during the course of your certification period that affect your ability to meet size, disadvantaged status, ownership, or control requirements or any material change in the information provided in your initial application, you must provide written notification to this agency within **thirty (30) days** of the occurrence of the change. Failure to provide this information is a ground for denial of certification based on failure to cooperate pursuant to 49 CFR 26.109(c).

Your firm's name will appear in the IL UCP DBE Directory under the following category name(s):

**NAICS Code(s):**
**238390 – Waterproofing Contractors**

The Directory is used by prime contractors/consultants, as well as other agencies, to solicit participation of DBE, and ACDBE firms. The Directory can be accessed on the Internet at https://webapps.dot.illinois.gov/UCP/ExternalSearch.

Your participation on contracts will only be credited toward **DBE** contract goals when you perform in your firm's approved area(s) of specialty. Credit for participation in an

area outside your specialty requires prior approval (verification of resources, expertise, and corresponding support documentation, etc.).

Sincerely,

[redacted]

Shannon E. Andrews
Chief Procurement Officer

SEA/em

# Unified Certification Program - Search

**Contractor Details** Browse F.A.Q. Sheet (/UCP/Search/Help)

Print

**Pine Waterproofing and Sealant, Inc.**
Debbie Pine
10209 Pacific Ave
Franklin Park, IL 60131-0000

**County:** Cook

**Email:** Pinewaterproofing@comcast.net

**Phone:** 847-678-5700

**Fax:** 847-678-5740

**Categories:** Construction

| NAICS | Speciality |
|---|---|
| 238390 - Waterproofing contractors | NAICS 238390 Waterproofing contractors |

© 2017 Illinois Department of Transportation Version: 1.1.27.5458

Illinois State Toll Highway Authority "ISTHA"

DBE FORM 2025 - DBE PARTICIPATION STATEMENT FORM, PART 2

| CONTRACT # | |
|---|---|

| DBE FIRM NAME: | Jamart Enterprises Inc. |
|---|---|
| CIRCLE ALL THAT APPLY: | DBE MBE WBE SBA 8(A) |

CHECK ALL THAT APPLY:

PRIME _____ JV PARTNER _____ SUBCONTRACTOR _____ TRUCKER ✓ SUPPLIER _____ MANUFACTURER _____

| SUBCONTRACTOR: | TIER 1 (SUB TO PRIME): (Y) N | TIER 2 OR BELOW: Y N | UNDER CONTRACT TO: |
|---|---|---|---|

This form must be completed for EACH disadvantaged business participating in the DBE Utilization Plan. This form is due to the Tollway by 5:00 pm on the fifth calendar day after notification to the prime by the Tollway as low apparent bidder to constructionbid@getipass.com. If additional space is needed, complete an additional form(s) for the firm or attach a detailed information on the DBE firm company letterhead.

| PAY ITEM NO. * | DESCRIPTION: Indicate whether furnish only, or both furnish and install | QUANTITY | UNIT PRICE | TOTAL CONTRACT AMOUNT ($) | CHECK IF SUPPLIER | TOTAL DBE CREDIT AMOUNT ($) (reduce to 60% of contract amount if firm is a SUPPLIER) |
|---|---|---|---|---|---|---|
| | | | | | | |
| Various | Misc Trucking | 1 LS | | See attached | | |
| | | | | | | |
| | | | | | | |
| | | | | | | |
| | | | TOTALS FOR THIS DBE FIRM: | $200,000.00 | | |

*Contingency Work must not be included under Pay Items and will not be approved toward DBE goal participation until such time as those Pay Items have been confirmed as required work of the contract. Direct Allowance items, including but not limited to Mobilization Item #JS671010, will not be approved within the DBE Utilization Plan. NOTE that these items are not included in the determination of the DBE Goal percentage.

1. **PARTIAL PAY ITEMS**: For any of the above ITEMS that are partial pay items, specifically describe the work and subcontract dollar amount.

2. **COMMITMENT**: The undersigned certify that the information herein is true and correct, and that the DBE listed below has agreed to perform a commercially-useful function in the work of the contract item(s) listed above and to execute a contract to that effect with the Prime Contractor. The undersigned further understand that NO CHANGES to the type or scope of work performed by the DBE may be made without PRIOR WRITTEN APPROVAL and that complete and accurate information regarding actual work performed by the DBE on this contract and the payment thereto must be provided to ISTHA's Department of Diversity and Strategic Development. **The Prime Contractor will not assign any of the contract items listed above to a firm other than the DBE identified below without ISTHA's prior written approval. The Prime Contractor must request, in writing, approval by ISTHA's Diversity and Strategic Development Department of any proposed amendment to the type or scope of work to be performed by the DBE** no later than three business days from the date the Prime Contractor becomes aware of the circumstances supporting the request. **Failure to receive written approval prior to a change in type or scope is a [redacted]icipation and can subject the contractor to contract sanctions.**

[redacted] Chief Estimator 6/25/19

Sign[redacted]me Contractor Title Date

Cont[redacted] Tim Polk

Firm Name: Walsh Construction Co. II LLC

E-mail: tpolk@walshgroup.com

Phone: 312-563-5400

Address: 929 W. Adams St. Chicago IL 60607

[redacted] President

Signature for DBE Contractor Title Date

Contact: Jose Arteaga

Firm Name: Jamart Enterprises Inc.

E-mail: jamartent@gmail.com

Phone: 708-368-2353

Address: 7519 Banks St. Justice, IL 60458

## THE ILLINOIS STATE TOLL HIGHWAY AUTHORITY (TOLLWAY)

**CONTRACT NO. I-18-4428**

**BRIDGE RECONSTRUCTION (BN 261) BURLINGTON NORTHERN SANTA FE (BNSF) RAILWAY OVER THE TRI-STATE TOLLWAY (I-294)**

**MILE POST 26.6**

**SCHEDULE OF PRICES**

| SP | PAY ITEM NUMBER | DESIGNATION | UNIT | QUANTITY | UNIT PRICE DOLLAR | AMOUNT DOLLAR |
|---|---|---|---|---|---|---|
| | 20400800 | FURNISHED EXCAVATION (PARTIAL) | L. SUM | 1 | $ 140,000.00 | $ 140,000.00 |
| * | X0800003 | COARSE AGGREGATE BACKFILL (SPECIAL) (PARTIAL) | L. SUM | 1 | $ 60,000.00 | $ 60,000.00 |
| | | | | | TOTAL AMOUNT OF CORE WORK: | $ 200,000.00 |

LEGEND FOR SP COLUMN

- * INDICATES SPECIAL PROVISION
- ** INDICATES TOLLWAY SUPPLEMENTAL SPECIFICATIONS
- *** INDICATES IDOT RECURRING SPECIAL PROVISION
- BDE INDICATES IDOT BDE SPECIAL PROVISION
- GBSP INDICATES IDOT GUIDE BRIDGE SPECIAL PROVISION

JAMART ENTERPRISES, INC.
7519 BANKS ST.
[redacted]

SIGNATURE Jose Arteaga
BY

# Unified Certification Program - Search

**Contractor Details**

Browse F.A.Q. Sheet (/UCP/Search/Help)

Print

**Jamart Enterprises Inc.**
Jose Mario Arteaga
7519 Banks St.
Justice, IL 60458

**Email:** jamartent@gmail.com
**Phone:** (708) 368-2353
**Fax:** (708) 277-1723

**County:** Cook

**Categories:** Trucking

| NAICS | Speciality |
|---|---|
| 484220-Specialized Freight (except Used Goods) Trucking, Local | 484220- TRUCKING |

© 2017 Illinois Department of Transportation

Version: 1.1.27.5458

**Illinois Department of Transportation**
Office of Business & Workforce Diversity
2300 South Dirksen Parkway / Springfield, Illinois 62764

March 14, 2019

CERTIFIED-RETURN RECEIPT REQUESTED

Jose Mario Arteaga
Jamart Enterprises Inc.
7519 Banks St.
Justice, IL 60458

Dear Jose Mario Arteaga:

The Illinois Department of Transportation (IDOT), your host agency, is pleased to notify you that your firm has met the requirements for Disadvantaged Business Enterprise (DBE) program certification in accordance with the governing federal regulations, 49 CFR part 26.

This certification allows your firm to participate as a DBE in the Illinois Unified Certification Program (IL UCP). The participating agencies include the Illinois Department of Transportation, the City of Chicago, the Chicago Transit Authority, Metra, and Pace.

Your certification is approved commencing on **February 20, 2019**. To remain certified with the IL UCP you must submit a *No Change Affidavit* each year. Notification will be sent to you sixty (60) days prior to the anniversary date of your certification. It is your responsibility to ensure that your certification is kept current by submitting the required information in a timely manner. Failure to provide this information is a ground for removal of certification based on failure to cooperate pursuant to 49 CFR 26.109(c).

If there is any change in circumstances that affects your ability to meet size, disadvantaged status, ownership, or control requirements or any material change in the information provided in your application, you must provide written notification to this agency within thirty (30) days of the occurrence of the change. Failure to provide this information is a ground for removal of certification pursuant to 49 CFR 26.83(i).

Your firm's name will appear in the IL UCP DBE Directory in the following area(s) of specialty:

TRUCKING

This Directory is used by prime contractors/consultants, as well as other agencies, to solicit participation of DBE firms. The Directory can be accessed on the Internet at http://www.dot.state.il.us/ucp/ucp.html.

Your participation on contracts will only be credited toward DBE contract goals when you perform in your firm's approved area(s) of specialty. Credit for participation in an area outside your specialty requires prior approval (verification of resources, expertise, and corresponding support documentation, etc.).

**Please note:**

- This certification does not attest to your firm's abilities to perform in the approved work category(ies).
- Your certification may be revoked if your firm is found to be involved in bidding or contractual irregularities or has violated DBE program regulations pursuant to 49 CFR Part 26.107.
- For work to count toward a DBE contract goal, the DBE firm must perform a "commercially useful function" pursuant to 49 CFR Part 26.55. A DBE is considered to perform a commercially useful function when it is responsible for execution of a distinct element of the work of a contract and carrying out its responsibilities by actually performing, managing, and supervising the work involved.
- All DBE trucking firms must own at least one truck. The truck must be operable and capable of hauling materials specific to the contract. The owned truck(s) must be used prior to utilizing leased truck(s).
- The DBE trucking firm receives goal credit for the total value of the transportation service it provides on the contract using trucks it owns, insures and operates and using drivers it employs.
- The DBE trucking firm which leases trucks from another DBE trucking firm receives goal credit for the total value of the transportation services the lessee DBE provides on the contract.
- When a DBE trucking firm leases from a non-DBE trucking firm, the goal credit is limited to the fee or commission the DBE receives as a result of the lease arrangement. The fee or commission shall be reasonable and shall be indicated on the lease.
- For any credit to be allowed for leased trucks, the leases must be properly filed with the Illinois Commerce Commission (ILCC) and indicate that the DBE has exclusive use and control over the truck(s). Leased trucks must visibly display the name and ILCC number of the DBE trucking firm.

Please direct all inquiries and any questions to this agency at (217) 782-5490.

Sincerely,

[redacted]

Debra A. Clark, Bureau Chief
Bureau of Small Business Enterprises

Enclosure

Illinois Department of Transportation

# Jamart Enterprises Inc.

is hereby certified as a

**Disadvantaged Business Enterprise**

This certificate is valid under current firm ownership and operational control only and supersedes any authorization or listing previously issued.

[redacted]

Matt Magalis
Acting Secretary
Illinois Department of Transportation

[redacted]

Pamela R. Simon
Director
Office of Business & Workforce Diversity

Effective the 20th day of February 2019

Illinois Tollway — Illinois State Toll Highway Authority "ISTHA"

DBE FORM 2025 - DBE PARTICIPATION STATEMENT FORM, PART 2

| CONTRACT # | I-18-4428 |
|---|---|

| DBE FIRM NAME: | R A Seaton Contractor Services LLC |
|---|---|
| CIRCLE ALL THAT APPLY: | (DBE) MBE WBE SBA 8(A) |

CHECK ALL THAT APPLY:

PRIME ____ JV PARTNER ____ SUBCONTRACTOR ____ TRUCKER X SUPPLIER ____ MANUFACTURER ____

| SUBCONTRACTOR: | TIER 1 (SUB TO PRIME): (Y) N | TIER 2 OR BELOW: Y N | UNDER CONTRACT TO: |
|---|---|---|---|

This form must be completed for EACH disadvantaged business participating in the DBE Utilization Plan. This form is due to the Tollway by 5:00 pm on the fifth calendar day after notification to the prime by the Tollway as low apparent bidder to constructionbid@getipass.com. If additional space is needed, complete an additional form(s) for the firm or attach a detailed information on the DBE firm company letterhead.

| PAY ITEM NO. * | DESCRIPTION: Indicate whether furnish only, or both furnish and install. | QUANTITY | UNIT PRICE | TOTAL CONTRACT AMOUNT ($) | CHECK IF SUPPLIER | TOTAL DBE CREDIT AMOUNT ($) (reduce to 60% of contract amount if firm is a SUPPLIER) |
|---|---|---|---|---|---|---|
| Various | Misc Trucking | 1 LS | | See attached | | |
| | | | | | | |
| | | | | | | |
| | | | | | | |
| | | | | | | |
| | | | TOTALS FOR THIS DBE FIRM: | $179,868.71 | | |

*Contingency Work must not be included under Pay Items and will not be approved toward DBE goal participation until such time as those Pay Items have been confirmed as required work of the contract. Direct Allowance items, including but not limited to Mobilization Item #JS671010, will not be approved within the DBE Utilization Plan. NOTE that these items are not included in the determination of the DBE Goal percentage.

1. **PARTIAL PAY ITEMS**: For any of the above ITEMS that are partial pay items, specifically describe the work and subcontract dollar amount.

2. **COMMITMENT:** The undersigned certify that the information herein is true and correct, and that the DBE listed below has agreed to perform a commercially-useful function in the work of the contract item(s) listed above and to execute a contract to that effect with the Prime Contractor. The undersigned further understand that NO CHANGES to the type or scope of work performed by the DBE may be made without PRIOR WRITTEN APPROVAL and that complete and accurate information regarding actual work performed by the DBE on this contract and the payment thereto must be provided to ISTHA's Department of Diversity and Strategic Development. **The Prime Contractor will not assign any of the contract items listed above to a firm other than the DBE identified below without ISTHA's prior written approval. The Prime Contractor must request, in writing, approval by ISTHA's Diversity and Strategic Development Department of any proposed amendment to the type or scope of work to be performed by the DBE no later than three business days from the date the Prime Contractor becomes aware of the circumstances supporting the request. Failure to receive written approval prior to a change in type or scope is a [redacted]rticipation and can subject the contractor to contract sanctions.**

[redacted]hief Estimator 6/25/19

Signature for Prime Contractor — Title — Date

Contact: Tim Polk
Firm Name: Walsh Construction Co. II, LLC
E-mail: tpolk@walshgroup.com
Phone: 312-563-5400
Address: 929 W. Adams St. Chicago, IL 60607

[redacted] Pres. 6/24/19

Signature for DBE Contractor — Title — Date

Contact: Rebecca A Seaton
Firm Name: Rebecca A Seaton
E-mail: raseatoncontractor@gmail.com
Phone: 815-520-4812
Address: 5100 Linden Road, Rockford, IL 61109

THE ILLINOIS STATE TOLL HIGHWAY AUTHORITY (TOLLWAY)

CONTRACT NO. I-18-4428

BRIDGE RECONSTRUCTION (BN 261) BURLINGTON NORTHERN SANTA FE (BNSF) RAILWAY OVER

THE TRI-STATE TOLLWAY (I-294)

MILE POST 26.6

SCHEDULE OF PRICES

| SP | PAY ITEM NUMBER | DESIGNATION | UNIT | QUANTITY | UNIT PRICE DOLLAR | AMOUNT DOLLAR |
|---|---|---|---|---|---|---|
| | 20400100 | BORROW EXCAVATION (PARTIAL) | L. SUM | 1 | $ 179,868.71 | $ 179,868.71 |
| | | | | | TOTAL AMOUNT OF CORE WORK: | $ 179,868.71 |

LEGEND FOR SP COLUMN

- * INDICATES SPECIAL PROVISION
- ** INDICATES TOLLWAY SUPPLEMENTAL SPECIFICATIONS
- *** INDICATES IDOT RECURRING SPECIAL PROVISION
- BDE INDICATES IDOT BDE SPECIAL PROVISION
- GBSP INDICATES IDOT GUIDE BRIDGE SPECIAL PROVISION

RA SEATON CONTRACTOR SERVICES
5100 LINDEN ROAD
ROCKFORD, IL 61109

[redacted]

SIGNATURE
Rebecca A Seaton
BY

# Unified Certification Program - Search

**Contractor Details**

Browse F.A.Q. Sheet (/UCP/Search/Help)

Print

**R.A. Seaton Contractor Services, L.L.C.**

Rebecca A. Seaton
5100 Linden Rd.
Rockford, IL 61109

**County:** Winnebago

**Email:** raseatoncontractor@gmail.com

**Phone:** (815) 520-4812

**Fax:** (815) 547-7766

**Categories:** Supplier, Trucking

| NAICS | Specialty |
|---|---|
| 327320-Ready-Mix Concrete Manufacturing | 327320- SUPPLIER: CONCRETE |
| 425120-Wholesale Trade Agents and Brokers | 425120- PIPE - NON-STOCKING DISTRIBUTOR |
| 484220-Specialized Freight (except Used Goods) Trucking, Local | 484220- TRUCKING |

© 2017 Illinois Department of Transportation

Version: 1.1.27.5458

**Illinois Department of Transportation**
**Office of Business & Workforce Diversity**
**2300 South Dirksen Parkway / Springfield, Illinois 62764**

September 25, 2018

CERTIFIED-RETURN RECEIPT REQUESTED

Ms. Rebecca A. Seaton
R. A. Seaton Contractor Services, L.L.C.
5100 Linden Rd.
Rockford, IL 61109

Dear Ms. Seaton:

The Illinois Department of Transportation (IDOT) has approved the "No Change Affidavit" for R. A. Seaton Contractor Services, L.L.C., and determined that the firm continues to meet DBE eligibility standards to perform work towards DBE goals.

In order to remain certified and in good standing, you must annually submit a No Change Affidavit. IDOT will send an affidavit form 60 days prior to the firm's next anniversary date.

Should the submitted information change, you are required to notify IDOT's Bureau of Small Business Enterprises (bureau) within 30 days of the change.

**Note:** Pursuant to 49 CFR Part 26.83(i), whenever there are <u>any</u> change in circumstances affecting your firm's eligibility status, your firm <u>must</u> provide written notification to IDOT within 30 days of the occurrence of the change. If you fail to make timely notification, it may result in the loss of your firm's certification.

If you have any questions, please contact the Bureau of Small Business Enterprises at (217) 782-5490.

Sincerely,

[redacted]

Debra A. Clark, Bureau Chief
Bureau of Small Business Enterprises

# Illinois Department of Transportation

## R.A. Seaton Contractor Services, L.L.C.

is hereby certified as a

**Disadvantaged Business Enterprise**

This certificate is valid under current firm ownership and operational control only and supercedes any authorization or listing previously issued.

[redacted]

Ann L. Schneider
Secretary
Illinois Department of Transportation

[redacted]

Debra A. Clark
Acting Bureau Chief
Bureau of Small Business Enterprises

Effective the 18th day of September 2012

Illinois State Toll Highway Authority "ISTHA"

DBE FORM 2025 - DBE PARTICIPATION STATEMENT FORM, PART 2

| CONTRACT # | I-18-4428 |
|---|---|

| DBE FIRM NAME: | DCH Construction & Hauling, LLC |
|---|---|
| CIRCLE ALL THAT APPLY: | DBE, MBE, WBE, SBA 8(A) |

| CHECK ALL THAT APPLY: | | | | | | |
|---|---|---|---|---|---|---|
| PRIME ____ | JV PARTNER ____ | SUBCONTRACTOR ____ | TRUCKER X | SUPPLIER ____ | MANUFACTURER ____ | |

| SUBCONTRACTOR: | TIER 1 (SUB TO PRIME): Y N | TIER 2 OR BELOW: Y N | UNDER CONTRACT TO: |
|---|---|---|---|

This form must be completed for EACH disadvantaged business participating in the DBE Utilization Plan. This form is due to the Tollway by 5:00 pm on the fifth calendar day after notification to the prime by the Tollway as low apparent bidder to constructionbids@getipass.com. If additional space is needed, complete an additional form(s) for the firm or attach a detailed information on the DBE firm company letterhead.

| PAY ITEM NO. * | DESCRIPTION: Indicate whether furnish only, or both furnish and install. | QUANTITY | UNIT PRICE | TOTAL CONTRACT AMOUNT ($) | CHECK IF SUPPLIER | TOTAL DBE CREDIT AMOUNT ($) (reduce to 60% of contract amount if firm is a SUPPLIER) |
|---|---|---|---|---|---|---|
| 20200100 | Earth Excavation (Partial) | | | $300,000.00 | | |
| 20400100 | Borrow Excavation (Partial) | | | $150,000.00 | | |
| | | | | | | |
| | | | | | | |
| | | | | | | |
| | | TOTALS FOR THIS DBE FIRM: | | | | |

*Contingency Work must not be included under Pay Items and will not be approved toward DBE goal participation until such time as those Pay Items have been confirmed as required work of the contract. Direct Allowance items, including but not limited to Mobilization Item #X671010, will not be approved within the DBE Utilization Plan. NOTE that these items are not included in the determination of the DBE Goal percentage.

1. **PARTIAL PAY ITEMS** For any of the above ITEMS that are partial pay items, specifically describe the work and subcontract dollar amount.

2. **COMMITMENT:** The undersigned certify that the information herein is true and correct, and that the DBE listed below has agreed to perform a commercially useful function in the work of the contract item(s) listed above and to execute a contract to that effect with the Prime Contractor. The undersigned further understand that NO CHANGES to the type or scope of work performed by the DBE may be made without PRIOR WRITTEN APPROVAL and that complete and accurate information regarding actual work performed by the DBE on this contract and the payment thereto must be provided to ISTHA's Department of Diversity and Strategic Development. **The Prime Contractor will not assign any of the contract items listed above to a firm other than the DBE identified below without ISTHA's prior written approval. The Prime Contractor must request, in writing, approval by ISTHA's Diversity and Strategic Development Department of any proposed amendment to the type or scope of work to be performed by the DBE** no later than three business days from the date the Prime Contractor becomes aware of the circumstances supporting the request. **Failure to receive written approval prior to a change in type or scope is a violation of the Special Provision for DBE Participation and can subject the contractor to contract sanctions.**

[redacted] Project Manager 8/7/19
Signature for Prime Contractor — Title — Date

Contact: Brian Fidoink
Firm Name: Walsh Construction II, LLC
E-mail: BFidoink@walshgroup.com
Phone: 312-656-1675
Address: 929 W. Adams St, Chicago IL 60607

[redacted] President 8/7/2019
Signature for DBE Contractor — Title — Date

Contact: Jeanette Chavarria-Torres
Firm Name: DCH Construction & Hauling, LLC
E-mail: jeanette@dchhauling.com
Phone: 773-853-1070
Address: 9454 Schiller Blvd Franklin Park, IL 60131

ISTHA_DBE FORM 2025_TEMPLATE 04/18/2018

CONTRACT #

*Illinois State Toll Highway Authority "ISTHA"*

DBE FORM 2025 - DBE PARTICIPATION STATEMENT FORM, PART 2/2

| CONTRACT # | I-18-4428 |
|---|---|

| DBE FIRM NAME: | DCH Construction & Hauling, LLC |
|---|---|
| CIRCLE ALL THAT APPLY: | DBE (MBE) (WBE) SBA 8(A) |

**CHECK ALL THAT APPLY:**

PRIME _____ JV PARTNER _____ SUBCONTRACTOR _____ TRUCKER ✓ SUPPLIER _____ MANUFACTURER _____

**SUBCONTRACTOR:** TIER 1 (SUB TO PRIME): (Y) N TIER 2 OR BELOW: Y (N) UNDER CONTRACT TO:

This form must be completed for EACH disadvantaged business participating in the DBE Utilization Plan.
Attach this form to the DBE Utilization Plan form, DBE Form 2026. If additional space is needed, complete an additional form(s) for the firm or attach a spreadsheet on DBE FIRM letterhead.

| PAY ITEM NO. * | DESCRIPTION: Indicate whether furnish only, or both furnish and install. | QUANTITY | UNIT PRICE | TOTAL CONTRACT AMOUNT ($) | CHECK IF SUPPLIER | TOTAL DBE CREDIT AMOUNT ($) (reduce to 60% of contract amount if firm is a SUPPLIER) |
|---|---|---|---|---|---|---|
| Various | DBE Hourly Trucking | | | See attached | | |
| | | | | | | |
| | | | | | | |
| | | | | | | |
| | | | | | | |
| | TOTALS FOR THIS DBE FIRM: | | | $375,000 | | |

*Contingency Work must not be included under Pay Items and will not be approved toward DBE goal participation until such time as those Pay Items have been confirmed as required work of the contract. Direct Allowance items and/or Mobilization Item #JS671010, will not be approved within the DBE Utilization Plan for DBE subcontractors but credit may be allowed if performed as part of specific pay item(s) during contract execution. Reference Sections II, VI.A.2 and VI.B.1 of the Special provision for DBE Participation. NOTE that these items are not included in the determination of the DBE Goal percentage.

1. **PARTIAL PAY ITEMS:** For any of the above ITEMS that are partial pay items, specifically describe the work and subcontract dollar amount.

2. **COMMITMENT:** The undersigned certify that the information herein is true and correct, and that the DBE listed below has agreed to perform a commercially-useful function in the work of the contract item(s) listed above and to execute a contract to that effect with the Prime Contractor. The undersigned further understand that NO CHANGES to the type or scope of work performed by the DBE may be made without PRIOR WRITTEN APPROVAL and that complete and accurate information regarding actual work performed by the DBE on this contract and the payment thereto must be provided to ISTHA's Department of Diversity and Strategic Development. **The Prime Contractor will not assign any of the contract items listed above to a firm other than the DBE identified below without ISTHA's prior written approval. The Prime Contractor must request, in writing, approval by ISTHA's Diversity and Strategic Development Department of any proposed amendment to the type or scope of work to be performed by the DBE no later than two business days from the date the Prime Contractor becomes aware of the circumstances supporting the request. Failure to receive written approval prior to a change in type or scope is a violation of the Special Provision for DBE [redacted] act sanctions.**

[redacted] Chief Estimator 6/25/19

Signature for Prime Contractor — Title

Date: 6/25/2019
Contact: Tim Polk
Phone: 312-563-5400
Firm Name: Walsh Construction Co. II LLC
Address: 929 W Adams St. Chicago IL 60607

[redacted] President

Signature for DBE Contractor — Title

Date: 6/24/2019
Contact: [illegible]
Phone: 773-853-1970
Firm Name: DCH Construction & Hauling, LLC
Address: 9454 Corridor Blvd Franklin Park IL 60131

## THE ILLINOIS STATE TOLL HIGHWAY AUTHORITY (TOLLWAY)

CONTRACT NO. I-18-4428

BRIDGE RECONSTRUCTION (BN 261) BURLINGTON NORTHERN SANTA FE (BNSF) RAILWAY OVER

THE TRI-STATE TOLLWAY (I-294)

MILE POST 26.6

SCHEDULE OF PRICES

| SP | PAY ITEM NUMBER | DESIGNATION | UNIT | QUANTITY | UNIT PRICE DOLLAR | AMOUNT DOLLAR |
|---|---|---|---|---|---|---|
| * | 20200100 | EARTH EXCAVATION (PARTIAL) | L SUM | 1 | $ 250,000.00 | $ 250,000.00 |
| | 20400100 | BORROW EXCAVATION (PARTIAL) | L SUM | 1 | $ 125,000.00 | $ 125,000.00 |
| | | | | | TOTAL AMOUNT OF CORE WORK: | $ 375,000.00 |

LEGEND FOR SP COLUMN

- * INDICATES SPECIAL PROVISION
- ** INDICATES TOLLWAY SUPPLEMENTAL SPECIFICATIONS
- *** INDICATES IDOT RECURRING SPECIAL PROVISION
- BDE INDICATES IDOT BDE SPECIAL PROVISION
- GBSP INDICATES IDOT GUIDE BRIDGE SPECIAL PROVISION

DCH CONSTRUCTION & HAULING
9454 SCHILLER BLVD
FRANKLIN PARK, IL 60131
[redacted]

BY

# Unified Certification Program - Search

**Contractor Details**

Browse F.A.Q. Sheet (/UCP/Search/Help)

Print

**DCH Construction & Hauling LLC**
Jeanette Chavarria-Torres
9454 Schiller Blvd.
Franklin Park, IL 60131

**County:** Cook

**Email:** Jeanette@dchhauling.com

**Phone:** (773) 853-1070

**Fax:**

**Categories:** Trucking

| NAICS | Speciality |
|---|---|
| 484220-Specialized Freight (except Used Goods) Trucking, Local | 484220- TRUCKING |

© 2017 Illinois Department of Transportation

Version: 1.1.27.5458

**Illinois Department of Transportation**
Office of Business & Workforce Diversity
2300 South Dirksen Parkway / Springfield, Illinois 62764

March 7, 2017

CERTIFIED-RETURN RECEIPT REQUESTED

Ms. Jeanette Chavarria-Torres
DCH Construction & Hauling LLC
9454 Schiller Blvd.
Franklin Park, IL 60131

To Whom It May Concern:

DCH Construction & Hauling LLC's No Change Affidavit is presently under review. Until such time as a decision is rendered, the firm remains certified as a Disadvantaged Business Enterprise with the Illinois Unified Certification Program.

Should you have any questions, feel free to contact my office at (217) 782-5490

Sincerely,

[redacted]

Debra A. Clark, Acting Bureau Chief
Bureau of Small Business Enterprises

DEPARTMENT OF PROCUREMENT SERVICES
CITY OF CHICAGO

AUG 23 2016

DCH Construction & Hauling, LLC
9454 Schiller Blvd
Franklin Park, IL 60131

Dear Jeanette Chavarria,

We are pleased to inform you that **DCH Construction & Hauling, LLC** has been certified as a **Minority-Owned Business Enterprise ("MBE"), Women-Owned Business Enterprise ("WBE")** by the City of Chicago ("City"). This **MBE/WBE** certification is valid until **8/15/2021**; however your firm's certification must be revalidated annually. In the past the City has provided you with an annual letter confirming your certification; such letters will no longer be issued. As a consequence, we require you to be even more diligent in filing your **annual No-Change Affidavit 60 days** before your annual anniversary date.

It is now your responsibility to check the City's certification directory and verify your certification status. As a condition of continued certification during the five-year period stated above, you must file an annual No-Change Affidavit. Your firm's **annual No-Change Affidavit** is due by **8/15/2017, 8/15/2018, 8/15/2019, and 8/15/2020**. Please remember, you have an affirmative duty to file your **No-Change Affidavit 60 days** prior to the date of expiration. Failure to file your annual No-Change Affidavit may result in the suspension or rescission of your certification.

Your firm's five-year certification will expire on **8/15/2021**. You have an affirmative duty to file for recertification **60 days** prior to the date of the five-year anniversary date. Therefore, you must file for recertification by **6/15/2021.**

It is important to note that you also have an ongoing affirmative duty to notify the City of any changes in ownership or control of your firm, or any other fact affecting your firm's eligibility for certification **within 10 days** of such change. These changes may include but are not limited to a change of address, change of business structure, change in ownership or ownership structure, change of business operations, gross receipts and or personal net worth that exceed the program threshold. Failure to provide the City with timely notice of such changes may result in the suspension or rescission of your

certification. In addition, you may be liable for civil penalties under Chapter 1-22, "False Claims", of the Municipal Code of Chicago.

Please note – you shall be deemed to have had your certification lapse and will be ineligible to participate as a **MBE/WBE** if you fail to:

- File your annual No-Change Affidavit within the required time period;
- Provide financial or other records requested pursuant to an audit within the required time period;
- Notify the City of any changes affecting your firm's certification **within 10 days** of such change; or
- File your recertification within the required time period.

Please be reminded of your contractual obligation to cooperate with the City with respect to any reviews, audits or investigation of its contracts and affirmative action programs. We strongly encourage you to assist us in maintaining the integrity of our programs by reporting instances or suspicions of fraud or abuse to the **City's Inspector General at chicagoinspectorgeneral.org, or 866-IG-TIPLINE (866-448-4754).**

Be advised that if you or your firm is found to be involved in certification, bidding and/or contractual fraud or abuse, the City will pursue decertification and debarment. In addition to any other penalty imposed by law, any person who knowingly obtains, or knowingly assists another in obtaining a contract with the City by falsely representing the individual or entity, or the individual or entity assisted is guilty of a misdemeanor, punishable by incarceration in the county jail for a period not to exceed six months, or a fine of not less than $5,000 and not more than $10,000 or both.

Your firm's name will be listed in the City's Directory of Minority and Women-Owned Business Enterprises in the specialty area(s) of:

**NAICS Code(s):**
**484220 - Specialized Freight (except Used Goods) Trucking, Local**

Your firm's participation on City contracts will be credited only toward **Minority-Owned Business Enterprise, Women-Owned Business Enterprise** goals in your area(s) specialty. While your participation on City contracts is not limited to your area of specialty, credit toward goals will be given only for work that is self-performed and providing a commercially useful function that is done in the approved specialty category.

Thank you for your interest in the City's Minority and Women-Owned Business Enterprise (MBE/WBE) Program.

Sincerely,

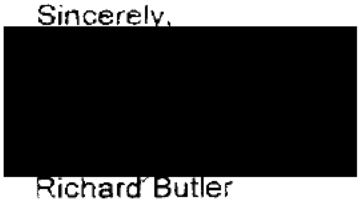

Richard Butler
First Deputy Procurement Officer
RB/gs

Protecting Our Water Environment

**Metropolitan Water Reclamation District of Greater Chicago**

100 EAST ERIE STREET CHICAGO, ILLINOIS 60611-3154 312.751.5600

BOARD OF COMMISSIONERS
Mariyana T. Spyropoulos
*President*
Barbara J. McGowan
*Vice President*
Frank Avila
*Chairman of Finance*
Ken Dunkin
Martin J. Durkan
Josina Morita
Debra Shore
Kari K. Steele
David J. Walsh

**Regina D. Berry**
Diversity Administrator

312.751.4035 f: 312.751.4440
regina.berry@mwrd.org

October 31, 2018

Jeanette Chavarria
**DCH Construction & Hauling, LLC**
9454 Schiller Boulevard
Franklin Park, IL 60131

Vendor Number: **5016078**

**Dear Jeanette Chavarria:**

We are in receipt of your City of Chicago Certification material as a MBE, WBE or SBE.

The result of our review concludes that **DCH Construction & Hauling, LLC** is certified as a **MWB** eligible to fulfill **MWB** requirements on Metropolitan Water Reclamation District of Greater Chicago ("District") contracts. Your firm is certified as of **October 31, 2018**.

It is your firm's obligation to apply for re-certification no later than **November 1, 2019.** Re-certification may be revoked if it is determined that your firm is involved in bidding irregularities, contract fraud or misrepresentation of your firm's MBE, WBE or SBE status. ***An additional in-depth review will be made if your company is listed as MBE, WBE or SBE on a bid document to fulfill Affirmative Action goals at the District.***

Your firm will be listed in the online edition of the District's Vendor Directory (MWRD.Org – "Search Vendor List"). Your specialty area will be shown as:

**Hauling Services**

As a certified MBE, WBE or SBE, it is your obligation to promptly notify this office in writing of any changes or circumstances that affect your ability to meet ownership, size requirements and or control of your firm. The notice must take the form of a notarized affidavit sworn to by the owner and provided within 30 days of the change. The District reserves the right to commence actions to revoke your firm's certification if this notification is not made.

**Illinois law requires that all corporations secure a Certification of Authority from the Illinois Secretary of State prior to doing business in the State.**

If you have any questions regarding MBE, WBE or SBE certification or District business opportunities, please contact PJ Spencer, Diversity Officer, at 312-757-5876.

Sincerely,

[redacted]

Regina D. Berry
Diversity Administrator

RDB:PCS

# CMS

ILLINOIS
DEPARTMENT OF CENTRAL MANAGEMENT SERVICES

September 13, 2018

Certification Term Expires: September 13, 2019

Miss Jeanette Chavarria-Torres
DCH Construction & Hauling LLC
9454 Schiller Blvd
Franklin Park, IL 60131

Dear Jeanette Chavarria-Torres:

Re: Women/Minority Business Enterprise (WMBE)

Congratulations! After reviewing the information that you supplied, we are pleased to inform you that your firm has been granted certification as a Women/Minority Business Enterprise (WMBE) under the Business Enterprise Program (BEP) for Minority, Females, and Persons with Disabilities.

This certification is in effect with the State of Illinois as specified on the above certification term expiration date.

At least 15 days prior to the anniversary date of your certification, you will be notified by BEP to update your certification as a condition of continued certification. In addition, should any changes occur in ownership and/or control of the business or other changes affecting the firm's operations, you are required to notify BEP within two weeks. Failure to notify our office of changes will result in decertification of your firm.

Please be advised, while this certification does not guarantee you will receive a State contract, it does assure your firm the opportunity to participate in the State's procurement process. Your firm's participation on State contracts will be credited only toward Women/Minority Business Enterprise (WMBE) goals in your area(s) of specialty. Your firm's name will appear in the State's Directory as a certified vendor with the Business Enterprise Program in the specialty area(s) of:

NIGP 96286: TRANSPORTATION OF GOODS, SHIPPING AND HANDLING, AND OTHER FREIGHT SERVICES

Please visit our website at www.opportunities.illinois.gov to obtain information about current and upcoming procurement opportunities, contracts, forms, and also to register to receive email alerts when the State is preparing to purchase a product or service you may provide.

Thank you for your participation in the Business Enterprise Program. We welcome your participation and wish you continued success.

Sincerely,

Carlos Gutiérrez
Certification Manager
Business Enterprise Program

WBENC

JOIN FORCES. SUCCEED TOGETHER.

hereby grants

# National Women's Business Enterprise Certification

to

## DCH Construction & Hauling, LLC

who has successfully met WBENC's standards as a Women's Business Enterprise (WBE).
This certification affirms the business is woman-owned, operated and controlled; and is valid through the date herein

Certification Granted: March 22, 2017
Expiration Date: March 31, 2020
WBENC National Certification Number: WBE1700557

WBENC National WBE Certification was processed and validated by
>Women's Business Development Center - Midwest, a WBENC Regional Partner Organization

[redacted]

Authorized by Emilia DiMenco, President & CEO
Women's Business Development Center - Midwest

WOMEN'S BUSINESS DEVELOPMENT CENTER

NAICS: 484220
UNSPSC: 78101801, 78141504

WBEC Business WBEC WBEC

# WBENC

WOMEN'S BUSINESS ENTERPRISE NATIONAL COUNCIL

JOIN FORCES. SUCCEED TOGETHER.

## HEREBY GRANTS
## WOMAN OWNED SMALL BUSINESS (WOSB) CERTIFICATION TO

DCH Construction & Hauling, LLC

The identified small business is an eligible WOSB for the WOSB Program, as set forth in 13 C.F.R. part 127 and has been certified as such by an SBA approved Third Party Certifier pursuant to the Third Party Agreement dated June 30, 2011, and available at www.sba.gov/wosb.

The WOSB Certification expires on the date herein unless there is a change in the SBA's regulation that makes the WOSB ineligible or there is a change in the WOSB that makes the WOSB ineligible. If either occurs, this WOSB Certification is immediately invalid. The WOSB must not misrepresent its certification status to any other party, including any local or State government or contracting official or the Federal government or any of its contracting officials.

| |
|---|
| NAICS: 484220<br>UNSPSC: 78101801, 78141504 |
| Certification Number: WOSB170521 |
| Expiration Date: March 31, 2020 |

WOMEN'S BUSINESS DEVELOPMENT CENTER

[redacted]

Lynn Coleman, Women's Business Development Center, President & CEO

[redacted]

Pamela Prince-Eason, WBENC President & CEO

Laura Taylor, WBENC Vice President

Illinois State Toll Highway Authority "ISTHA"

DBE FORM 2025 - DBE PARTICIPATION STATEMENT FORM, PART 2

| CONTRACT # | I-18-4428 |
|---|---|

| DBE FIRM NAME: | J. Ave Development, Inc. |
|---|---|
| CIRCLE ALL THAT APPLY: | DBE MBE WBE SBA 8(A) |

CHECK ALL THAT APPLY:

PRIME ____ JV PARTNER ____ SUBCONTRACTOR X TRUCKER X SUPPLIER ____ MANUFACTURER ____

| SUBCONTRACTOR: | TIER 1 (SUB TO PRIME): Y N | TIER 2 OR BELOW: Y N | UNDER CONTRACT TO: |
|---|---|---|---|

This form must be completed for EACH disadvantaged business participating in the DBE Utilization Plan. This form is due to the Tollway by 5:00 pm on the fifth calendar day after notification to the prime by the Tollway as low apparent bidder to constructionbid@getipass.com. If additional space is needed, complete an additional form(s) for the firm or attach a detailed information on the DBE firm company letterhead.

| PAY ITEM NO. * | DESCRIPTION: Indicate whether furnish only, or both furnish and install. | QUANTITY | UNIT PRICE | TOTAL CONTRACT AMOUNT ($) | CHECK IF SUPPLIER | TOTAL DBE CREDIT AMOUNT ($) (reduce to 60% of contract amount if firm is a SUPPLIER) |
|---|---|---|---|---|---|---|
| | Furnish trucking services | | | | | |
| Various | Flatbed & Lowboy | | 1 LS | See attached | | |
| | | | | | | |
| | | | | | | |
| | | | | | | |
| | | | TOTALS FOR THIS DBE FIRM: | 337,798.00 | | |

*Contingency Work must not be included under Pay Items and will not be approved toward DBE goal participation until such time as those Pay Items have been confirmed as required work of the contract. Direct Allowance items, including but not limited to Mobilization Item #IS671010, will not be approved within the DBE Utilization Plan. NOTE that these items are not included in the determination of the DBE Goal percentage.

1. **PARTIAL PAY ITEMS**: For any of the above ITEMS that are partial pay items, specifically describe the work and subcontract dollar amount.

2. **COMMITMENT**: The undersigned certify that the information herein is true and correct, and that the DBE listed below has agreed to perform a commercially-useful function in the work of the contract item(s) listed above and to execute a contract to that effect with the Prime Contractor. The undersigned further understand that NO CHANGES to the type or scope of work performed by the DBE may be made without PRIOR WRITTEN APPROVAL and that complete and accurate information regarding actual work performed by the DBE on this contract and the payment thereto must be provided to ISTHA's Department of Diversity and Strategic Development. **The Prime Contractor will not assign any of the contract items listed above to a firm other than the DBE identified below without ISTHA's prior written approval. The Prime Contractor must request, in writing, approval by ISTHA's Diversity and Strategic Development Department of any proposed amendment to the type or scope of work to be performed by the DBE no later than three business days from the date the Prime Contractor becomes aware of the circumstances supporting the request. Failure to receive written approval prior to a change in type or scope is a violation of the Special Provision for DBE Participation and can subject the contractor to contract sanctions.**

[redacted] Chief Estimator 6/25/19

Signature for Prime Contractor — Title — Date

Contact: Tim Polk

Firm Name: Walsh Construction Co. II LLC

E-mail: tpolk@walshgroup.com

Phone: 312-563-5400

Address: 929 W. Adams St. Chicago IL 60607

[redacted] Owner 6/13/19

Signature of DBE Contractor — Title — Date

Contact: John Arelas

Firm Name: J. Ave Development Inc

E-mail: javedevelopment@yahoo.com

Phone: 630 243-8300

Address: 16430 New Ave Lemont, IL 60439

## THE ILLINOIS STATE TOLL HIGHWAY AUTHORITY (TOLLWAY)

**CONTRACT NO. I-18-4428**

**BRIDGE RECONSTRUCTION (BN 261) BURLINGTON NORTHERN SANTA FE (BNSF) RAILWAY OVER**

**THE TRI-STATE TOLLWAY (I-294)**

**MILE POST 26.6**

**SCHEDULE OF PRICES**

| SP | PAY ITEM NUMBER | DESIGNATION | UNIT | QUANTITY | UNIT PRICE DOLLAR | AMOUNT DOLLAR |
|---|---|---|---|---|---|---|
| * | 20200100 | EARTH EXCAVATION (PARTIAL) | L. SUM | 1 | $ 125,000.00 | $ 125,000.00 |
| | 20400100 | BORROW EXCAVATION (PARTIAL) | L. SUM | 1 | $ 100,000.00 | $ 100,000.00 |
| | 20400800 | FURNISHED EXCAVATION (PARTIAL) | L. SUM | 1 | $ 112,798.00 | $ 112,798.00 |
| | | | | | TOTAL AMOUNT OF CORE WORK: | $ 337,798.00 |

LEGEND FOR SP COLUMN

- * INDICATES SPECIAL PROVISION
- ** INDICATES TOLLWAY SUPPLEMENTAL SPECIFICATIONS
- *** INDICATES IDOT RECURRING SPECIAL PROVISION
- BDE INDICATES IDOT BDE SPECIAL PROVISION
- GBSP INDICATES IDOT GUIDE BRIDGE SPECIAL PROVISION

J. AVE DEVELOPMENT INC.
16430 NEW AVENUE
[redacted]

SIGNATURE
BY

# Unified Certification Program - Search

**Contractor Details**

Browse F.A.Q. Sheet (/UCP/Search/Help)

Print

**J. Ave Development, Inc.**
John Avelar
12300 New Ave
Lemont, IL 60439-0000

**County:** Will

**Email:** javedevelopment@yahoo.com

**Phone:** 630-243-9300

**Fax:** 630-243-0433

**Categories:** Trucking

| NAICS | Speciality |
|---|---|
| 484220 - Dump trucking (e.g., gravel, sand, top-soil) | 484220 Dump trucking (e.g., gravel, sand, top soil) |
| 562111 - Waste collection services, nonhazardous solid | 562111 Waste collection services, nonhazardous solid |

© 2017 Illinois Department of Transportation

Version: 1.1.27.5458

DEPARTMENT OF PROCUREMENT SERVICES

SEP 26 2018

CITY OF CHICAGO

John Avelar
J. Ave Development, Inc.
16430 W. New Avenue
Lemont, IL 60439

Dear John Avelar:

The City of Chicago has reviewed your annual *No Change Affidavit* and supporting documentation and is pleased to inform you that your firm, **J. Ave Development, Inc.** continues to meet the **Disadvantaged Business Enterprise ("DBE")** program certification eligibility standards set forth in 49 CFR Part 26. Your next No Change Affidavit is due **June 1, 2019**.

This certification allows your firm to participate as a DBE in the Illinois Unified Certification Program (IL UCP). The participating agencies include the City of Chicago, Illinois Department of Transportation, the Chicago Transit Authority, Metra and Pace.

If there is any change in circumstances during the course of your certification period that affect your ability to meet size, disadvantaged status, ownership, or control requirements or any material change in the information provided in your initial application, you must provide written notification to this agency within **thirty (30) days** of the occurrence of the change. Failure to provide this information is a ground for denial of certification based on failure to cooperate pursuant to 49 CFR 26.109(c).

Your firm's name will appear in the IL UCP DBE Directory under the following category name(s):

**NAICS Code(s):**
**484220 – Dump Trucking (e.g., gravel, sand, top soil)**
**484220 – Trucking, Specialized Freight (except used goods), local**
**562111 – Waste Collection Services, nonhazardous solid**

The Directory is used by prime contractors/consultants, as well as other agencies, to solicit participation of DBE, and ACDBE firms. The Directory can be accessed on the Internet at https://webapps.dot.illinois.gov/UCP/ExternalSearch

Your participation on contracts will only be credited toward **DBE** contract goals when you perform in your firm's approved area(s) of specialty. Credit for participation in an area outside your specialty requires prior approval (verification of resources, expertise, and corresponding support documentation, etc.).

Sincerely,

[redacted]

Rich Butler
First Deputy Procurement Officer
RB/kr

121 NORTH LASALLE STREET, ROOM 806, CHICAGO, ILLINOIS 60602

DEPARTMENT OF PROCUREMENT SERVICES

DEC 7 2017

CITY OF CHICAGO

John Avelar
J. Ave Development, Inc.
16430 W. New Avenue
Lemont, IL 60439

Dear John Avelar:

The City of Chicago has reviewed your annual *No Change Affidavit* and supporting documentation and is pleased to inform you that your firm, **J. Ave Development, Inc.** continues to meet the **Disadvantaged Business Enterprise ("DBE")** program certification eligibility standards set forth in 49 CFR Part 26. Your next No Change Affidavit is due **June 1, 2018**.

This certification allows your firm to participate as a DBE in the Illinois Unified Certification Program (IL UCP). The participating agencies include the City of Chicago, Illinois Department of Transportation, the Chicago Transit Authority, Metra and Pace.

If there is any change in circumstances during the course of your certification period that affect your ability to meet size, disadvantaged status, ownership, or control requirements or any material change in the information provided in your initial application, you must provide written notification to this agency within **thirty (30) days** of the occurrence of the change. Failure to provide this information is a ground for denial of certification based on failure to cooperate pursuant to 49 CFR 26.109(c).

Your firm's name will appear in the IL UCP DBE Directory under the following category name(s):

**NAICS Code(s):**
**484220 – Dump Trucking (e.g., gravel, sand, top soil)**
**562111 – Waste Collection Services , nonhazardous solid**

The Directory is used by prime contractors/consultants, as well as other agencies, to solicit participation of DBE, and ACDBE firms. The Directory can be accessed on the Internet at https://webapps.dot.illinois.gov/UCP/ExternalSearch

Your participation on contracts will only be credited toward **DBE** contract goals when you perform in your firm's approved area(s) of specialty. Credit for participation in an area outside your specialty requires prior approval (verification of resources, expertise, and corresponding support documentation, etc.).

[redacted]

Rich Butler
First Deputy Procurement Officer
RB/kr

DEPARTMENT OF PROCUREMENT SERVICES

CITY OF CHICAGO

DEC 7 2017

John Avelar
J. Ave Development, Inc.
16430 W. New Avenue
Lemont, IL 60439

**REVISED**

Dear John Avelar:

We are pleased to inform you that **J. Ave Development, Inc.** has been certified as a **Minority-Owned Business Enterprise ("MBE")** by the City of Chicago ("City"). This **MBE** certification is valid until **6/1/2021**; however your firm's certification must be revalidated annually. In the past the City has provided you with an annual letter confirming your certification; such letters will no longer be issued. As a consequence, we require you to be even more diligent in filing your **Annual No-Change Affidavit 60 days** before your annual anniversary date.

It is now your responsibility to check the City's certification directory and verify your certification status. As a condition of continued certification during the five year period stated above, you must file an annual No-Change Affidavit. Your firm's **Annual No-Change Affidavit** is due by **6/1/2018, 6/1/2019 and 6/1/2020.** Please remember, you have an affirmative duty to file your **No-Change Affidavit 60 days** prior to the date of expiration. Failure to file your annual No-Change Affidavit may result in the suspension or rescission of your certification.

Your firm's five year certification will expire on **6/1/2021.** You have an affirmative duty to file for recertification **60 days** prior to the date of the five year anniversary date. Therefore, you must file for recertification by **4/1/2021.**

It is important to note that you also have an ongoing affirmative duty to notify the City of any changes in ownership or control of your firm, or any other fact affecting your firm's eligibility for certification **within 10 days** of such change. These changes may include but are not limited to a change of address, change of business structure, change in ownership or ownership structure, change of business operations, gross receipts and or personal net worth that exceed the program threshold. Failure to provide the City with timely notice of such changes may result in the suspension or rescission of your certification. In addition, you may be liable for civil penalties under Chapter 1-22, "False Claims", of the Municipal Code of Chicago.
Please note – you shall be deemed to have had your certification lapse and will be ineligible to participate as a **MBE** if you fail to:

- File your annual No-Change Affidavit within the required time period;
- Provide financial or other records requested pursuant to an audit within the required time period;
- Notify the City of any changes affecting your firm's certification **within 10 days** of such change; or

- File your recertification within the required time period.

Please be reminded of your contractual obligation to cooperate with the City with respect to any reviews, audits or investigation of its contracts and affirmative action programs. We strongly encourage you to assist us in maintaining the integrity of our programs by reporting instances or suspicions of fraud or abuse to the **City's Inspector General at chicagoinspectorgeneral.org, or 866-IG-TIPLINE (866-448-4754).**

Be advised that if you or your firm is found to be involved in certification, bidding and/or contractual fraud or abuse, the City will pursue decertification and debarment. In addition to any other penalty imposed by law, any person who knowingly obtains, or knowingly assists another in obtaining a contract with the City by falsely representing the individual or entity, or the individual or entity assisted is guilty of a misdemeanor, punishable by incarceration in the county jail for a period not to exceed six months, or a fine of not less than $5,000 and not more than $10,000 or both.

Your firm's name will be listed in the City's Directory of Minority and Women-Owned Business Enterprises in the specialty area(s) of:

**NAICS Code(s):**
**484220 – Dump Trucking (e.g., gravel, sand, top-soil)**
**562111 – Waste Collection Services, nonhazardous soild**

Your firm's participation on City contracts will be credited only toward **Minority-Owned Business Enterprise** goals in your area(s) specialty. While your participation on City contracts is not limited to your area of specialty, credit toward goals will be given only for work that is self-performed and providing a commercially useful function that is done in the approved specialty category.

Thank you for your interest in the City's Minority and Women-Owned Business Enterprise (MBE/WBE) Program.

Sincerely,

[redacted]

Rich Butler
First Deputy Procurement Officer

RB/kr

# DBE FORM 2023

**Demonstration of Good Faith Efforts to Achieve DBE Subcontracting Goal**

If the DBE contract goal was not achieved, the Good Faith Efforts checklist and contacts log must be submitted with the bid. Failure to do so may render the Bidder's solicitation response non-responsive and cause it to be rejected, or render the Bidder ineligible for contract award, at ISTHA's sole discretion. The Bidder must provide all evidence relied upon in support of its Good Faith Efforts with its bid.

**Good Faith Efforts Checklist**

Insert on each line below the initials of the authorized Bidder representative who is certifying the Bidder has completed the activities described below. If any of the items were not completed, attach a detailed written explanation. If any other efforts were made to obtain DBE participation in addition to the items listed below, attach a detailed written explanation.

X Identified portions of the contract work capable of performance by available DBEs, including, where appropriate, breaking out contract work items into economically feasible units to facilitate DBE participation even when the Bidder could perform those scopes with its own forces.

X Solicited through reasonable and available means (e.g., pre-bid meetings, networking session, written notices, advertisements) DBEs to perform the types of work that could be subcontracted on this project, within sufficient time to allow them to respond.

- ILUCP DBE Directory: http://www.idot.illinois.gov/doing-business/certifications/disadvantaged-business-enterprise-certification/il-ucp-directory/index
- City of Chicago's M/WBE Directory: https://chicago.mwdbe.com/FrontEnd/VendorSearchPublic.asp?TN=Chicago
- County of Cook, IL's M/WBE Directory: http://www.cookcountyil.gov/mbewbevbe-directory/
- Small Business Administration's SBA 8(a) Directory: http://dsbs.sba.gov/dsbs/search/dsp_dsbs.cfm

X Provided timely and adequate information about the plans, specifications and requirements of the contract. Followed up initial solicitations to answer questions and encourage DBEs to submit bids.

X Negotiated in good faith with interested DBEs that submitted bids and thoroughly investigated their capabilities.

X Made efforts to assist interested DBEs in obtaining bonding, lines of credit, or insurance as may be required for performance of the contract (if applicable).

X Utilized resources available to identify available DBEs, including but not limited to DBE assistance groups; local, state and federal minority or women business assistance offices; and other organizations that provide assistance in the recruitment and placement of DBEs.

**Affidavit of Truthfulness: Signature below affirms accuracy of Good Faith Efforts and authority to provide above information**

Print Name: Sean C Walsh Phone contact: 312.563.5400

Position: President [redacted] E-mail address: dshier@walshgroup.com

Signatur[redacted] Date: 6/6/2019

Illinois Tollway

# DBE FORM 2023

**Good Faith Efforts Contacts Log for Soliciting - DBE Participation: Form 2023 continued**

Project name: Bridge Reconstruction Burlington Nothern Santa Fe Railway (BNSF) Over the Tri-State Tollway (I-294)

Project number: I-18-4428

Bidder name: Walsh Construction Company II, LLC

Contact person: Tim Polk

Use this form to document all contacts and responses (telephone, e-mail, fax, etc.) regarding the solicitation of DBEs. Duplicate as needed.

| Name of DBE | Date and method of contact | Scope of work solicited | Reason agreement was not reached |
|---|---|---|---|
| | PLEASE SEE GOOD FAITH EFFORT BOOK ATTACHED IF GOAL WASN'T MET | | |
| | | | |
| | | | |
| | | | |

**Affidavit of Truthfulness:** Signature below affirms accuracy of Good Faith Efforts and authority to provide above information

**Print Name:** Sean C Walsh

**Position:** President [redacted]

**Signature:** [redacted]

**Phone contact:** 312.563.5400

**E-mail address:** dshier@walshgroup.com

**Date:** 6/6/2019

Illinois Tollway

# DBE FORM 2023

**Good Faith Efforts Contacts Log for Soliciting - DBE Participation: Form 2023 continued**

Project name: _____ Project number: _____

Bidder name: _____ Contact person: _____

Use this form to document all contacts and responses (telephone, e-mail, fax, etc.) regarding the solicitation of DBEs. Duplicate as needed.

| Name of DBE | Date and method of contact | Scope of work solicited | Reason agreement was not reached |
|---|---|---|---|
| | | | |
| | | | |
| | | | |
| | | | |

**Affidavit of Truthfulness:** Signature below affirms accuracy of Good Faith Efforts and authority to provide above information

**Print Name:** _____ **Phone contact:** _____

**Position:** _____ **E-mail address:** _____

**Signature:** _____ **Date:** _____

# ILLINOIS STATE TOLL HIGHWAY AUTHORITY

## FORM 2024 - DBE Trucking Reporting and Verification Form

To be submitted to the CM by the prime contractor at 25%, 50%, 75% of contract completion, FINAL (Request for Release of Final Retainage)

### SECTION A: to be completed by Prime Contractor

(a) Contract Number _____

(b) Prime Contractor Name _____

(c) Contract Award Value _____

(d) Amount Earned to Date _____

(e) Percent Complete _____ Chose One

(f) Reporting Period: _____ To _____

| | (h) Name of DBE Trucking Subcontractor | (i) DBE Trucking Subcontractor Amount from DBE Plan (Form 2025) | (j) Amount Paid to DBE Trucking Subcontractor to Date | (k) Percent of Planned Amount Paid to Date |
|---|---|---|---|---|
| (g) | | | | #DIV/0! |

(h) _____ Signature of Prime Contractor Authorized Agent _____ Date

(i) _____ Printed Name _____ Title

### SECTION B: to be completed by DBE Trucking Sub-Contractor

| | | Number of Trucks |
|---|---|---|
| (j) | Total value of payments received for trucks owned and operated by this DBE trucker | a. _____ |
| (k) | Total value of payments received for trucks leased and operated by another DBE trucker | b. _____ |
| (l) | Total value of payments received for trucks leased from a Non-DBE trucker | c. _____ |
| (m) | | $ _____ - |

Total of a, b & c above must be equal to the amount paid to subcontract as disclosed by the prime contractor in Section A (Shaded Cell); include number of trucks for each dollar value.

(n) Total fee or commission received in association with lease of Non-DBE trucks (mark-up) d. _____

(o) **Total DBE Trucking Participation Based on DBE Special Provision VII.A.** $ _____ -

Sum of a, b & d above

(p) _____ Signature of DBE Sub-Contractor Authorized Agent _____ Date

(q) _____ Printed Name _____ Title

I certify that I have read and understood the information provided by this form and that all of the foregoing information submitted in this affidavit are true and correct to the best of my knowledge, as of the stated date(s), and that all responses are full and complete, omitting no material information. I authorize the Illinois State Toll Highway Authority to make inquiries to verify the accuracy of the statements made.

I understand that a material or false statement or omission made in connection with this application may be sufficient cause for revocation of a prior DBE certification, initiation of suspension or debarment proceedings, and may subject the person and/or entity making the false statement to any and all civil and criminal penalties available pursuant to applicable Federal and State law.

_____ Signature /Date of Construction Manager (CM)

Diversity Verification _____ Initials / Date

Illinois Tollway

# ISTHA DBE Utilization by Period Report – DBE Form 2114

## General Information

| | | | | |
|---|---|---|---|---|
| 1 | Report Date | | | |
| 2 | Contract No. | | | |
| 3 | Contract Description | | | |
| 4 | Contractor Name | | | |
| 5 | Current Pay Estimate No. | | | |
| 6 | Pay Estimate(s) Covered | | | |
| 7 | Reporting Period | | through | |

## Contract Financials (cumulative)

| | | |
|---|---|---|
| 8 | Original Contract Amount ($) | |
| 9 | Adjusted Contract Amount ($) | |

## DBE Financials (cumulative)

| | | |
|---|---|---|
| 10 | Current DBE Commitment ($) | |
| 11 | Current DBE Commitment (%) | |
| 12 | Overall DBE % Paid-To-Date | |
| 13 | Overall DBE % Projected-To-Date | |

## Progress Payment Summary

| | | Current Period | To-Date |
|---|---|---|---|
| 14 | Paid to DBE contractors/suppliers ($) | 14(a) | 14(b) |
| 15 | Projected for DBE contractors/suppliers | | |

## Progress Payment Detail

| | | | |
|---|---|---|---|
| 16 | **DBE subcontractor/supplier name #1** | | |
| 17 | Approved 2025 Amount ($) | | |
| 18 | Projected Amount ($) | | |
| 19 | Pay Item #(s) worked on by DBE are consistent with those previously approved for this DBE subcontractor/supplier [ ] YES [ ] NO [ ] N/A If no, explanation must be provided in Comments field (24). | | |
| 20 | % of work completed to date | | |
| | | **Current Period** | **To-Date** |
| 21 | Amount Paid ($) | 21(a) | 21(b) |
| 22 | Retainage Held ($) | 22(a) | 22(b) |
| 23 | Retainage Released ($) | 23(a) | 23(b) |
| 24 | Comments | | |

| | | | |
|---|---|---|---|
| 16 | **DBE subcontractor/supplier name #2** | | |
| 17 | Approved 2025 Amount ($) | | |
| 18 | Projected Amount ($) | | |
| 19 | Pay Item #(s) worked on by DBE are consistent with those previously approved for this DBE subcontractor/supplier [ ] YES [ ] NO [ ] N/A If no, explanation must be provided in Comments field (24). | | |
| 20 | % of work completed to date | | |
| | | **Current Period** | **To-Date** |
| 21 | Amount Paid ($) | 21(a) | 21(b) |
| 22 | Retainage Held ($) | 22(a) | 22(b) |
| 23 | Retainage Released ($) | 23(a) | 23(b) |
| 24 | Comments | | |

| | | | |
|---|---|---|---|
| 16 | **DBE subcontractor/supplier name #3** | | |
| 17 | Approved 2025 Amount ($) | | |
| 18 | Projected Amount ($) | | |
| 19 | Pay Item #(s) worked on by DBE are consistent with those previously approved for this DBE subcontractor/supplier [ ] YES [ ] NO [ ] N/A If no, explanation must be provided in Comments field (24). | | |
| 20 | % of work completed to date | | |
| | | **Current Period** | **To-Date** |
| 21 | Amount Paid ($) | 21(a) | 21(b) |
| 22 | Retainage Held ($) | 22(a) | 22(b) |
| 23 | Retainage Released ($) | 23(a) | 23(b) |

| | |
|---|---|
| 24 | Comments |

| | | | |
|---|---|---|---|
| 16 | **DBE subcontractor/supplier name #4** | | |
| 17 | Approved 2025 Amount ($) | | |
| 18 | Projected Amount ($) | | |
| 19 | Pay Item #(s) worked on by DBE are consistent with those previously approved for this DBE subcontractor/supplier [ ] YES [ ] NO [ ] N/A If no, explanation must be provided in Comments field (24). | | |
| 20 | % of work completed to date | | |
| | | **Current Period** | **To-Date** |
| 21 | Amount Paid ($) | 21(a) | 21(b) |
| 22 | Retainage Held ($) | 22(a) | 22(b) |
| 23 | Retainage Released ($) | 23(a) | 23(b) |
| 24 | Comments | | |

| | | | |
|---|---|---|---|
| 16 | **DBE subcontractor/supplier name #5** | | |
| 17 | Approved 2025 Amount ($) | | |
| 18 | Projected Amount ($) | | |
| 19 | Pay Item #(s) worked on by DBE are consistent with those previously approved for this DBE subcontractor/supplier [ ] YES [ ] NO [ ] N/A If no, explanation must be provided in Comments field (24). | | |
| 20 | % of work completed to date | | |
| | | **Current Period** | **To-Date** |
| 21 | Amount Paid ($) | 21(a) | 21(b) |
| 22 | Retainage Held ($) | 22(a) | 22(b) |
| 23 | Retainage Released ($) | 23(a) | 23(b) |
| 24 | Comments | | |

**Notes:**

- "Projected amount" is understood to mean, based upon presently available data, that amount which is calculated, estimated, or predicted to be part of the approved DBE commitment for this contract.
- All subcontractors (including 2nd and 3rd tier) must be reported on the DBE 2114 in order to receive DBE credit.

**Affidavit**

*For and on behalf of* _____ I, _____
(25) – Printed Company Name (26) – Printed Name of Agent

its duly authorized agent with full power and authority to make this certification, represent, warrant and certify to the Illinois Tollway that this Disclosure represents to the best of my knowledge complete and accurate information on all payments made to date to DBE firms in fulfillment of our DBE Utilization Plan – Forms 2025 & 2026.

| | | |
|---|---|---|
| 27 | Title of Agent: | |
| 28 | Signature of Agent: | |
| 28 | Date of Signature: | |

**Payer / Preparer / Prime**

| | | |
|---|---|---|
| 30 | Name: | |
| 31 | Title: | |
| 32 | Email Address: | |
| 33 | Phone No.: | |

Illinois Tollway

# ISTHA DBE Final Payment Report – DBE Form 2115

**General Information**

| | | | | |
|---|---|---|---|---|
| 1 | Report Date: | | | |
| 2 | Contract No.: | | | |
| 3 | Reporting Period: | | Through | |

**Prime Contractor Information**

| | | |
|---|---|---|
| 4 | Prime Contractor: | |
| 5 | Address: | |
| 6 | Telephone: | |

**Subcontractor Information**

| | | |
|---|---|---|
| 7 | Subcontractor: | |
| 8 | Address: | |
| 9 | Telephone: | |

**Subcontractor Payment**

| | | |
|---|---|---|
| 13 | Payment Earned during Contract: | |
| 14 | Adjustments: | |
| 15 | Payment Recvd to date: | |
| 16 | Payment withheld due to delinquent debt: | |
| 17 | Balance Due: | |

**Subcontractor Work during Contract:**

| Pay Item No. | Pay Item Description | Quantity | Unit | Unit Price | Total Amount | Partial Pay Item Descr. (if app.) | Total Earned by Subcontractor |
|---|---|---|---|---|---|---|---|
| (18) | (19) | (20) | (21) | (22) | (23) | (24) | (25) |
| | | | | | | | |
| | | | | | | | |
| | | | | | | | |
| | | | | | | | |
| | | | | | | | |
| | | | | | | | |
| | | | | | | (26) **Sum:** | |

| | |
|---|---|
| (27)Explanations | |

**Affidavit:** This form is to verify the work completed and the amount paid to the DBE Subcontractor on the above captioned contract. Under penalty of law for perjury or falsification, the undersigned certifies that the work reported herein was executed by the DBE, that the DBE actually performed, managed and supervised the work, that this represents all payment to the Subcontractor on the above captioned contract, excepting payment withheld due to delinquent debt for which the Subcontractor is responsible, and that the work reported herein conforms to the work reported in the approved Utilization Plan (DBE Form 2026/2025) together with any amendments approved by ISTHA. The undersigned also certifies that he or she is a duly authorized agent with full power and authority to make this certification.

**Prime Contractor**

| | | |
|---|---|---|
| 28 | Name of Agent: | |
| 29 | Title of Agent: | |
| 30 | Signature of Agent: | |
| 31 | Date of Signature: | |

**Subcontractor**

| | | |
|---|---|---|
| 32 | Name of Agent: | |
| 33 | Title of Agent: | |
| 34 | Signature of Agent: | |
| 35 | Date of Signature: | |

# Capture Application Request for Log-in/Password

I, _____, _____,
(Print the name of signatory party) (Title)

request a **Login** and **Password** for the DBE/EEO Capture Application for

☐ Construction Manager ☐ Prime Contractor

(company name) _____.

**Request Type:** ☐ New User – or -- ☐ I need to add or remove contracts from my existing ID.

My email address is: _____ (only for new user).

I have the responsibility to review DBE/EEO data for the Tollway on contract(s):

| | | |
|---|---|---|
| # _____<br>[ ] add [ ] remove | # _____<br>[ ] add [ ] remove | # _____<br>[ ] add [ ] remove |
| # _____<br>[ ] add [ ] remove | # _____<br>[ ] add [ ] remove | # _____<br>[ ] add [ ] remove |

Any party reviewing this DBE/EEO data must certify that they have the authority to provide the information contained therein and that the information is complete and accurate.

Print Name: _____ Date _____

User Signature: _____ Date _____

Print Company Name: _____ Date _____

Affidavit: *For and on behalf of* _____
(Printed Company Name)
I, _____, its duly authorized agent with full power
(Printed Name of Agent)
and authority to make this certification, represents, warrant and certify to the Illinois Tollway that this Disclosure is complete and accurate.

| | |
|---|---|
| Title of Agent: | |
| Signature of Agent: | |
| Date of Signature: | |

**For ease of response, please e-mail this request from the email account listed above to:**
**dbe@getipass.com**

**Illinois State Toll Highway Authority**

**SPECIAL PROVISIONS FOR**

**EQUAL EMPLOYMENT OPPORTUNITY PROGRAM**

## 1. OBJECTIVE OF THE EQUAL EMPLOYMENT OPPORTUNITY PROGRAM (EEO):

To promote equality of employment opportunity for all individuals including veteran, minority, and female tradespersons on Illinois State Toll Highway Authority (ISTHA or "Tollway") capital construction projects. In its efforts to achieve this equality, it is the desire of ISTHA to follow the guidelines as instituted by the United States Department of Labor, Office of Federal Contract Compliance Programs ("OFCCP") as established through Executive Order 11246 and by Title VII of the Civil Rights Act of 1964, the Illinois Department of Human Rights (IDHR) as established through the Illinois Human Rights Act (Illinois Compiled Statutes, 775 ILCS 5/1 -101, et sequitur), and State of Illinois Executive Order 15-2, Executive Order To Ensure Equal Opportunity Is Provided To All Illinois Persons And Businesses.

## 2. CONTRACTOR ASSURANCE:

The Contractor will assure that each of its employees and its subcontractors' employees associated with the contract shall not discriminate on the basis of any protected category identified by law in the performance of this contract in compliance with Title VII of the Civil Rights Act of 1964 found in 42 U.S.C § 2000e, *et seq* and Illinois state laws. Discrimination is the unfair treatment or denial of normal privileges to persons because of any characteristic protected by law. The Tollway encourages the prompt reporting of incidents of suspected discrimination, harassment or retaliation, regardless of the offender's identity or position. In the event of the contractor's non-compliance with this Equal Employment Opportunity Special Provision, the contractor may be declared ineligible for future contracts or subcontracts with the State of Illinois or any of its political subdivisions or municipal corporations, and the contract may be cancelled or voided in whole or in part, and other remedies invoked as provided by statute or regulation.

## 3. EEO GOAL TO BE ACHIEVED BY THE CONTRACTOR:

The EEO goals set by the U.S. Dept. of Labor - Office of Federal Contract Compliance Programs ("OFCCP") for construction trade workers in the Chicago area, which is provided through Executive Order 11246, apply to this contract. The EEO goals are measured through the following percentages of construction aggregated work hours in each of the categories;

Women: at least 6.9 percent for all contracts.

Minorities: set on a contract basis, dependent upon the county where the work will be performed. The Minority Goal for this contract is **_19.6_%**.

| ILLINOIS COUNTY | CURRENT FEDERAL GOAL % FOR MINORITIES | ILLINOIS COUNTY | CURRENT FEDERAL GOAL % FOR MINORITIES |
|---|---|---|---|
| BOONE | 6.3 | LAKE | 19.6 |
| BUREAU | 18.4 | LASALLE | 18.4 |
| COOK | 19.6 | LEE | 4:6 |
| DEKALB | 18.4 | MCHENRY | 19.6 |
| DUPAGE | 19.6 | OGLE | 4.6 |
| GRUNDY | 18.4 | ROCK ISLAND | 4.6 |
| HENRY | 4.6 | STEPHENSON | 4.6 |
| IROQUOIS | 18.4 | WHITESIDE | 3.4 |
| KANE | 19.6 | WILL | 19.6 |
| KENDALL | 18.4 | WINNEBAGO | 6.3 |

## 4. DEFINITIONS OF ETHNIC CLASSIFICATIONS:

AMERICAN INDIAN OR ALASKA NATIVE:

Persons having origins in any of the original peoples of North and South American (including Central America), and who maintain tribal affiliation or community attachment.

ASIAN:

Persons having origins in any of the original peoples of the Far East, Southeast Asia, or the Indian Subcontinent, including for example Cambodia, China, India, Japan, Korea, Malaysia, Pakistan, the Philippine Islands, Thailand, and Vietnam.

BLACK OR AFRICAN AMERICAN:

Persons having origins in any of the Black racial groups of Africa.

HISPANIC:

Persons of Mexican, Puerto Rican, Cuban, Central American, South American, or other Spanish culture or origin, regardless of race.

**5. CONTRACT PERFORMANCE**

During the performance of this contract, the contractor agrees as follows, as required by the Illinois Department of Human Rights (IDHR) at 44 Ill. Admin. Code 750 (Appendix A):

5.1 That it will, upon receipt of "Notice of Intent" email as low apparent responsive/responsible Bidder, submit EEO Form 1256, Workforce Projection if required by the "Notice of Intent".

5.2 That it will not discriminate against any protected category identified by law; and further that it will examine all job classifications to determine if minority persons or women are underutilized and will take appropriate affirmative action to rectify any such underutilization.

5.3 That, if it hires additional employees in order to perform this contract or any portion thereof, it will determine the availability (in accordance with IDHR's rules) of minorities and women in the area(s) from which it may reasonably recruit and it will hire for each job classification for which employees are hired in such a way that minorities and women are not underutilized.

5.4 That, in all solicitations or advertisements for employees placed by it or on its behalf, it will state that all applicants will be afforded equal opportunity without discrimination of any protected category identified by law.

5.5 That it will send to each labor organization or representative of workers with which it has or is bound by a collective bargaining or other agreement or understanding, a notice advising such labor organization or representative of the contractor's obligations under the Illinois Human Rights Act and the IDHR's Rules. If any such labor organization or representative fails or refuses to cooperate with the contractor in its efforts to comply with such Act and Rules, the contractor will promptly so notify the IDHR and the contracting agency and will recruit employees from other sources when necessary to fulfill its obligations thereunder.

5.6 That it will submit reports as required by the IDHR's Rules, furnish all relevant information as may from time to time be requested by the IDHR or the Tollway, and in all respects comply with the Illinois Human Rights Act and the IDHR's Rules.

5.7 That it will abide by the audit clause of the contract.

5.8 That it will include verbatim or by reference the provisions of this clause in every subcontract it awards under which any portion of the contract obligations are undertaken or assumed, so that such provisions will be binding upon such subcontractor. In the same manner as with other provisions of this contract, the contractor will be liable

for compliance with applicable provisions of this clause by such subcontractors; and further it will promptly notify the contracting agency and the IDHR in the event any subcontractor fails or refuses to comply therewith. In addition,

the contractor will not utilize any subcontractor declared by the Illinois Human Rights Commission to be ineligible for contracts or subcontracts with the State of Illinois or any of its political subdivisions or municipal corporations.

5.9 That it will designate and make known to the Tollway an EEO Officer.

**6. CALCULATING EEO PERFORMANCE, CREDIT TOWARDS THE USDOL OFCCP GOALS AND VETERAN PARTICIPATION FOR ILLINOIS EXECUTIVE ORDER 15-12:**

Actual amounts of minority, female, and veteran work will be measured for the total hours of construction workers employed on the contract within each of the categories of journeyworker, apprentice and laborer by the Contractor and all of the worksite subcontractors. Minority female trade worker hours are counted in applicable ethnic category, in the veteran category if applicable and also in the female category.

In the certified payroll reports, the following ethnic categories should be used to indicate minority personnel for purposes of reporting compliance with the weekly certified payroll report: American Indian/Alaska Native, Asian, Black/African American, Hispanic and Native Hawaiian/Other Pacific Islander.

Included in the certified payrolls, as "Apprentices" are only bona fide apprentices currently in a training program certified by the U.S. Department of Labor - Bureau of Apprenticeship and Training, and hours credited towards the EEO Program are only those hours the apprentice was employed at the construction site. "Journeyworkers" are the construction site journeyworkers from the major trades. Other "Helpers", watchmen, custodial workers, clerical workers, and salaried superintendents are not creditable in the formula. Hourly wage "Forepersons" and "Forepersons" otherwise known as working forepersons, will be counted as journeyworkers for purposes of the EEO Program reporting.

In addition to the timely submission of certified payroll required by the Prevailing Wage Act (820 ILCS 130) as required by the contract specifications, the Contractor must have submitted all certified payrolls for the Contractor and all subcontractors before the Contractor submits its request for the final release of retention and the final waiver of lien. No adjustments to certified payrolls will be accepted after the transmission of the final waiver of lien.

The contractor and each subcontractor shall permit its employees to be interviewed on the job, during working hours, by compliance personnel of the Tollway, IDHR or the Department of Labor regarding compliance with the terms of this Special Provision.

**7. EEO FORM 0003 WORKFORCE ANALYSIS**

All contractor and subcontractors' EEO 0003 reports must be submitted electronically to the Tollway.

The party preparing the report must give their name, title, email address and telephone number. The contractor is required to submit EEO Form 0003, Workforce Analysis, electronically monthly and be up-to-date to through the last full month preceding the transmittal of each pay estimate. Failure to submit the EEO 0003 Report(s) electronically **before transmittal of the pay estimate** will cause the pay estimate to be deemed incomplete and will be returned to the Contractor for completion.

The Contractor is responsible for maintaining a hard copy of the Contractor's and subcontractors' certified payrolls, including all properly executed certifications, organized by contract for every construction worksite. Failure to report fully all required workforce information will cause a delay in processing the Contractor's pay estimates. Disclosure of this information is required. Patterns of delinquent reporting may be cause to terminate this contract or such other remedy as the Tollway deems appropriate.

**8. SUBCONTRACTOR OBLIGATIONS:**

The Contractor is required to clearly identify in their subcontract agreements the specific performance obligations that each subcontractor has toward assisting the Contractor in meeting the EEO goals.

In the same manner as with other provisions of this contract, the Contractor will be responsible for compliance with applicable provisions of this clause by such subcontractors; and further it will promptly notify the Tollway and the IDHR in the event any subcontractor fails or refuses to comply therewith. In addition, the Contractor will not utilize any subcontractor declared by the Illinois Human Rights Commission to be ineligible for contracts or subcontracts with the State of Illinois or any of its political subdivisions or municipal corporations.

**9. GOOD FAITH EFFORT PROCEDURES:**

If the Tollway determines that the Contractor and/or its subcontractors are not in compliance with the EEO goals, the Tollway will notify the Contractor of said non-compliance. The Contractor must submit a Corrective Action Plan within fifteen (15) business days of the date of its receipt of the notice of non-compliance. The Corrective Action Plan must contain evidence of good faith efforts the Contractor has made in an effort to meet the EEO goals and outline the additional good faith efforts the Contractor will be making, including but not limited to timelines, through the remaining life of the contract.

**10. CORRECTIVE ACTION PLAN:**

The Corrective Action Plan must show that the Contractor made good faith efforts, taking all necessary and reasonable steps to achieve the stated EEO goals. Necessary and reasonable steps are those that could reasonably be expected to employ and retain a sufficient number of minority and female trade workers to meet or exceed the federally set EEO goals for the Illinois county in which work is performed.

Examples of Good Faith Efforts include, but are not limited to, the following:

- Establish and maintain a current list of minority, veteran and female recruitment sources, provide written notification to minority and female recruitment sources and to community organizations when the Contractor or its labor organizations have employment opportunities available, and maintain a record of the organizations' responses.
- Maintain a current file of the names, addresses and telephone numbers of each minority and female off-the-street applicant and minority or female referral from a labor organization, a recruitment source or community organization.
- Develop on-the-job training opportunities and/or participate in training programs for the area which expressly include minorities and women, including upgrading programs and apprenticeship and trainee programs relevant to the Contractor's employment needs, especially those programs funded or approved by the Department of Labor.
- Disseminate the Contractor's EEO policy by providing notice of the policy to labor organizations and training programs and requesting their cooperation in assisting the Contractor in meeting its EEO obligations; by including it in any policy manual and collective bargaining agreement; by publicizing it in the company newspaper, annual report, etc.; by specific review of the policy with all management personnel and with all minority and female employees at least once a year; and by posting the company EEO policy on bulletin boards accessible to all employees at each location where construction work is performed.
- Disseminate the Contractor's EEO policy externally by including it in any advertising in the news media, specifically including minority and female news media, and providing written notification to and discussing the Contractor's EEO policy with other Contractors and Subcontractors with whom the Contractor does or anticipates doing business.

- Direct its recruitment efforts, both oral and written, to minority, female and community organizations, to schools with minority and female students and to minority and female recruitment and training organizations serving the Contractor's recruitment area and employment needs.
- Encourage present minority and female employees to recruit other minority persons and women and, where reasonable, provide after school, summer and vacation employment to minority and female youth both on the site and in other areas of a Contractor's work force.

The Tollway will consider the quality, quantity and intensity of the kinds of efforts that the Contractor and its subcontractors have made throughout the life of the contract. Mere pro forma efforts are not good faith efforts; rather, the Contractor and its subcontractors are expected to have taken those efforts that would be reasonably expected of a Contractor and its subcontractors who are actively trying to employ and retain minority and female trade workers sufficient to meet the contract EEO goals.

**11. AMENDED CORRECTIVE ACTION PLAN:**

If the Tollway determines that the Contractor has not made a good faith effort to meet the EEO goals, the Tollway will notify the Contractor of that preliminary determination by contacting the responsible company official designated in the Corrective Action Plan. The preliminary determination will include a statement of reasons why a finding of insufficient good faith efforts has been made and may include additional good faith efforts that the Contractor could take to remedy the deficiency. The notification will designate a fifteen (15) business day period during which the Contractor may make additional efforts to demonstrate a good faith effort to meet the EEO goals. The Contractor is not limited by the Tollway's suggestions per Sections 9 and 10 of additional good faith efforts, but may take other actions in order to demonstrate good faith efforts to employ and retain additional minority and female trade workers on the project. The Contractor shall submit an amended Corrective Action Plan if additional employment commitments to meet the EEO contract goal are secured and/or to document its additional good faith efforts. If additional hiring commitments sufficient to meet the EEO contract goal are not secured, the Contractor shall report the final good faith efforts made in the time allotted. All additional efforts taken by the Contractor will be considered as part of the Contractor's good faith efforts. If the Contractor is not able to meet the EEO goal after making additional efforts, the Tollway will make a pre-final determination as to the good faith efforts of the Contractor and will notify the designated responsible Contractor official of the reasons for an adverse determination, if applicable.

**12. DETERMINATION OF NON-COMPLIANCE:**

If the Tollway determines that the Contractor has failed to make a good faith effort to meet the EEO goals on the contract, the Tollway will document its findings in a "Letter of Non-Compliance" that will become part of the procurement file maintained on the Contractor by the Tollway. The Letter may include a proposed sanction under Section 14 if the Contractor fails to take corrective action in a timely fashion. Upon a finding that a Contractor has failed to make good faith efforts to achieve the applicable EEO goals, the Tollway may exercise any appropriate sanction available to it under Section 14, including the revocation of the contract award to the Contractor and any other remedy available to the Tollway under its contract with the Contractor or by law.

**13. ADMINISTRATIVE RECONSIDERATION:**

The Contractor may request administrative reconsideration of a Letter of Non-Compliance within the fifteen (15) business days after its receipt of the Letter by actual delivery of a reconsideration request to the Tollway, Department of Diversity and Strategic Development, 2700 Ogden Avenue, Downers Grove, Illinois 60515-1703 or via email to E-mail address: form0003wfa@getipass.com. Deposit of the request in the United States mail on or before the fifth business day shall not be deemed delivery. The Letter of Non-Compliance shall become final if the Contractor fails to submit a timely request for administrative reconsideration. A request may provide additional written documentation and/or argument concerning the issue of whether an adequate good faith effort was made to meet the contract goal.

The Tollway Chief of Diversity and Strategic Development or his/her designee will send the Contractor a written decision within fifteen (15) business days after receipt of the request for reconsideration, unless extended by the

Tollway if a hearing is requested, explaining the basis for finding that the Contractor did or did not meet the EEO goals or demonstrate good faith efforts towards meeting those goals. A decision by the Chief of Diversity and Strategic Development that a good faith effort was made shall be deemed approval of the Corrective Action Plan submitted by the Contractor. A final decision that a good faith effort was not made shall render the Contractor in breach as non-compliant with its contract with the Tollway and may subject the Contractor to sanctions under Section 14.

**14. SANCTIONS:**

The Contractor's failure to achieve the EEO goals or to demonstrate good faith efforts towards meeting those goals may subject the Contractor to administrative sanctions. These sanctions include, but are not limited to, monetary sanctions, including non-release of retainage, liquidated damages, deeming the Contractor as non-responsible with respect to future business with the Tollway, and other reasonable sanctions as are permitted by law or equity. A Contractor's repeated failure to meet its EEO obligations on Tollway contracts can be grounds for the Tollway to not award future contracts to the Contractor.

In imposing sanctions, the Tollway will consider the bona fide efforts of the Contractor to meet the EEO goals, its history of good faith efforts on other Tollway contracts, the size of the contract, the degree to which the Contractor fell below the EEO goals, and other factors deemed relevant by the Tollway.

**15. RECORDS RETENTION AND AUDIT**

Refer to the audit clause of the contract.

**16. INACCURATE OR FRAUDULENT REPORTING:**

Contractors and subcontractors have a duty to accurately report information pursuant to this Special Provision. A Contractor or subcontractor who fails to supply accurate information may be subject to sanctions imposed by the Tollway under Section 14. A Contractor or subcontractor who intentionally supplies inaccurate information may be subject to civil and/or criminal sanctions.

**17. OTHER REGULATIONS:**

The achievement of the EEO goals does not abrogate other responsibilities of the Contractor to comply with equal employment opportunity requirements under federal or state law, municipal ordinance, prevailing government regulations or terms contained elsewhere in the Contract.

Tollway Contract #: _____

Prime: _____

Date: _____

**FORM EEO 1256 - WORKFORCE PROJECTION**

The undersigned Bidder has analyzed minority group and female populations, unemployment rates and availability of workers for the location in which this contract work is to be performed, and for the locations from which the Bidder recruits employees, and hereby submits the following workforce projection including a projection for minority and female employee utilization in all job categories in the workforce to be allocated to this contract:

TABLE A

| TOTAL Workforce Projection for Contract | | | | | | | | | | | | |
|---|---|---|---|---|---|---|---|---|---|---|---|---|
| | | | MINORITY EMPLOYEES | | | | | | TRAINEES | | | |
| JOB CATEGORIES | TOTAL EMPLOYEES | | BLACK | | HISPANIC | | *OTHER MINOR. | | APPREN-TICES | | ON THE JOB TRAINEES | |
| | M | F | M | F | M | F | M | F | M | F | M | F |
| Officials (Manager) | | | | | | | | | | | | |
| Supervisors | | | | | | | | | | | | |
| Foremen | | | | | | | | | | | | |
| Clerical | | | | | | | | | | | | |
| Equipment Operators | | | | | | | | | | | | |
| Mechanics | | | | | | | | | | | | |
| Truck Drivers | | | | | | | | | | | | |
| Ironworkers | | | | | | | | | | | | |
| Carpenters | | | | | | | | | | | | |
| Cement Masons | | | | | | | | | | | | |
| Electricians | | | | | | | | | | | | |
| Pipefitters, Plumbers | | | | | | | | | | | | |
| Painters | | | | | | | | | | | | |
| Laborers, Semi-Skilled | | | | | | | | | | | | |
| Laborers, Unskilled | | | | | | | | | | | | |
| TOTAL | | | | | | | | | | | | |

TABLE B

| CURRENT EMPLOYEES TO BE ASSIGNED TO CONTRACT | | | |
|---|---|---|---|
| TOTAL EMPLOYEES | | MINORITY EMPLOYEES | |
| M | F | M | F |
| | | | |
| | | | |
| | | | |
| | | | |
| | | | |
| | | | |
| | | | |
| | | | |
| | | | |
| | | | |
| | | | |
| | | | |
| | | | |
| | | | |
| | | | |
| | | | |

TABLE C

| TOTAL Training Projection for Contract | | | | | | | | |
|---|---|---|---|---|---|---|---|---|
| Employees In Training | Total Employee | | Black | | Hispanic | | *Other Minor. | |
| | M | F | M | F | M | F | M | F |
| Apprentices | | | | | | | | |
| On-The-Job Trainees | | | | | | | | |

* Other minorities are defined as Asians (A) or Native Americans (N). Please specify race of each employee shown in Other Minorities column.

Note: See Instructions on page 2

**FORM EEO 1256 - WORKFORCE PROJECTION** - continued

A. Included in "Total Employees" under Table A is the total number of new hires that would be employed in the event the undersigned Bidder is awarded this contract.

The undersigned Bidder projects that: (number) _____ new hires would be recruited from the area in which the contract project is located; and/or (number) _____ new hires would be recruited from the area in which the Bidder's principal office or base of operation is located.

B. Included in "Total Employees" under Table A is a projection of numbers of persons to be employed directly by the undersigned Bidder as well as a projection of numbers of persons to be employed by subcontractors.

The undersigned Bidder estimates that (number) _____ persons will be directly employed by the prime contractor and that (number) _____ persons will be employed by subcontractors.

Company _____ Telephone Number _____

_____

Address _____

**Instructions:** All tables must include subcontractor personnel in addition to prime contractor personnel.

**Table A -** Include both the number of employees that would be hired to perform the contract work and the total number currently employed (Table B) that will be allocated to contract work, and include all apprentices and on-the-job trainees. The "Total Employees" column should include all employees including all minorities, apprentices and on-the-job trainees to be employed on the contract work.

**Table B -** Include all employees currently employed that will be allocated to the contract work including any apprentices and on-the-job trainees currently employed.

**Table C -** Indicate the racial breakdown of the total apprentices and on-the-job trainees shown in Table A.

Illinois Tollway

# EEO 0003 Workforce Reporting Worksheet

| | | | |
|---|---|---|---|
| Contract # | | Prepared by | |
| EEO Contractor/Supplier Name | | Title | |
| Company Contact | | E-mail Address | |
| Period Begin Date | | Phone # | |
| Period End Date | | | |
| Current Pay Estimate | | % Complete | Mobilization Date |
| No Hours to Report | ☐ | | |
| Work Performed | | | |
| Narrative Box | | | |

| | ✓ CHECK THE CORRECT BOX | | | | | | | | | | | | ENTER HOURS AND COUNT | | | |
|---|---|---|---|---|---|---|---|---|---|---|---|---|---|---|---|---|
| Job Category | Gender | | Ethnicity | | | | | | | Worker Experience Level | | | Non-Veteran | | Veteran | |
| | Male | Female | African American | American Indian /AK | Asian | Hispanic | Native Hawaian or other Pacific | Two or More Races | White | Journey - man | App-rentice | On-the-Job Trainee | Hours | Count | Hours | Count |
| | | | | | | | | | | | | | | | | |
| | | | | | | | | | | | | | | | | |
| | | | | | | | | | | | | | | | | |
| | | | | | | | | | | | | | | | | |
| | | | | | | | | | | | | | | | | |
| | | | | | | | | | | | | | | | | |
| | | | | | | | | | | | | | | | | |
| | | | | | | | | | | | | | | | | |
| | | | | | | | | | | | | | | | | |
| | | | | | | | | | | | | | | | | |
| | | | | | | | | | | | | | | | | |
| | | | | | | | | | | | | | | | | |

STATE OF ILLINOIS

**SPECIAL PROVISION - VETERAN SMALL BUSINESS**
**PARTICIPATION AND UTILIZATION PLAN - CONSTRUCTION**
**For State Agency/State University Use Only**

It is the goal of the State to promote and encourage the continued economic development of small businesses owned and controlled by qualified veterans and that qualified service-disabled veteran-owned small businesses (SDVOSB) and veteran-owned small businesses (VOSB) participate in the State's procurement process as both prime contractors and subcontractors. 30 ILCS 500/45-57.

**Contract Goal to be Achieved by Vendor:** This solicitation includes a specific **Veteran Small Business** participation goal of **1.00%** based on the availability of CMS certified veteran-owned and service-disabled veteran-owned small business (VOSB/SDVOSB) vendors to perform or provide the anticipated services and/or supplies required by this solicitation.

**The Veteran Small Business participation goal is applicable to all bids or offers.** In addition to the other award criteria established for this solicitation, the Agency will award this contract to a Vendor that meets the goal or makes good faith efforts to meet the goal. This goal is also applicable to change orders and allowances within the scope of work provided by the certified VOSB/SDVOSB vendor. If Vendor is a CMS certified VOSB/SDVOSB vendor, the entire goal is met and no subcontracting with a CMS certified VOSB/SDVOSB vendor is required; however, **Vendor must submit a Utilization Plan indicating that the goal will be met by self-performance.**

**The VOSB goal is separate and distinct from the DBE goal. A single firm may not be utilized to achieve credit toward both DBE and VOSB goals on a single project except when the firm is bidding the contract as the Prime Vendor, is certified as both a DBE and VOSB and will commit to meeting the two goals by self-performing the same or greater percentage of work under the contract as the DBE and VOSB goals added together.**

Following are guidelines for Vendor's completion of the Utilization Plan. **Please read the guidelines carefully.**

- Utilization Plan (Form 2026) is due with bid
- Good Faith Efforts (Form 2023) is due with bid, if applicable
- Participation Statement (Form 2025) for each Veteran firm listed on the Form 2026 is due by 5:00 p.m. on the fifth calendar day after email notification to the prime by the Tollway of low apparent Bidder status. In no case should a Contractor remove, replace, or reduce the commitment to a Veteran firm listed in the initial Utilization Plan Form 2026 without prior written consent of ISTHA. Under no circumstances is the Bidder allowed to change the amount of the core bid submitted or any other documentation unrelated to this special provision.

Vendor should include any additional information that will add clarity to Vendor's proposed utilization of certified Veteran Small Business vendors to meet the targeted goal. The Utilization Plan must demonstrate that Vendor has either: (1) met the entire contract goal; (2) made good faith efforts towards meeting the entire goal; or (3) made good faith efforts towards meeting a portion of the goal. Any submission of good faith efforts by Vendor shall be considered as a request for a full or partial waiver.

**At the time of bid or offer, Vendor, or Vendor's proposed Subcontractor, must be certified with CMS as a VOSB or SDVOSB.** Failure to complete a Utilization Plan or provide Good Faith Effort documentation shall render the bid or offer non-responsive or not responsible.

1. If applicable where there is more than one prime vendor, the Utilization Plan should include an executed Joint Venture Agreement specifying the terms and conditions of the relationship between the parties and their relationship and responsibilities to the contract. The Joint Venture Agreement must clearly evidence that the certified VOSB/SDVOSB vendor will be responsible for a clearly defined portion of the work and that its responsibilities, risks, profits and contributions of capital, and personnel are proportionate to its ownership percentage. It must include specific details related to the parties' contributions of capital, personnel, and equipment and share of the costs of insurance and other items; the scopes to be performed by the certified

VOSB/SDVOSB vendor under its supervision; and the commitment of management, supervisory personnel, and operative personnel employed by the certified VOSB/SDVOSB vendor to be dedicated to the performance of the contract. Established Joint Venture Agreements will only be credited toward Veteran Small Business goal achievements for specific work performed by the certified VOSB/SDVOSB vendor. **Each party to the Joint Venture Agreement must execute the bid or offer prior to submission of the bid or offer to the Agency.**

2. An agreement between a vendor and a certified VOSB/SDVOSB vendor in which a certified VOSB/SDVOSB vendor promises not to provide subcontracting or pricing quotations to other vendors is prohibited. The Agency may request additional information to demonstrate compliance. Vendor agrees to cooperate promptly with the Agency in submitting to interviews, allowing entry to places of business, providing further documentation, and to soliciting the cooperation of a proposed certified VOSB/SDVOSB vendor. Failure to cooperate by Vendor and certified VOSB/SDVOSB vendor may render the Bidder or offeror non-responsive or not responsible. **The contract will not be finally awarded to Vendor unless Vendor's Utilization Plan is approved.**

3. **Veteran Small Business Certified Vendor Locator References:** Vendors may consult CMS' Veteran Small Business Vendor Directory at www.sell2.illinois.gov/cms/business, as well as the directories of other certifying agencies, but firms **must be certified with CMS as VOSB/SDVOSB vendors at the time of bid/offer.**

4. **Vendor Assurance:** Vendor shall not discriminate on the basis of race, color, national origin, sexual orientation or sex in the performance of this contract. Failure by Vendor to carry out these requirements is a material breach of this contract, which may result in the termination of this contract or such other remedy, as the Agency deems appropriate. This assurance must be included in each subcontract that Vendor signs with a subcontractor or supplier.

5. **Calculating Certified VOSB/SDVOSB Vendor Participation:** The Utilization Plan documents work anticipated to be performed, or goods/equipment provided by all certified VOSB/SDVOSB vendors and paid for upon satisfactory completion/delivery. Only the value of payments made for the work actually performed by certified VOSB/SDVOSB vendors is counted toward the contract goal. Applicable guidelines for counting payments attributable to contract goals are summarized below:

**5.1** The participation of VOSBs will be calculated on the amount of the Core Work, not Contingency Work identified in the bid documents. The Contractor's VOSB commitment will be assessed for any and all Extra Work Orders (EWO) and Change Orders (CO) at the time such orders are issued.

5.1.1 *Contingency Work* is the anticipated work within the scope of the project which is included in the project to cover the work of such an uncertain nature that the location or quantity could not be identified prior to awarding the contract.

5.1.2 *Core Work* is the anticipated work within the scope of the project which is included in the project to cover the work of such a nature that the location and estimated quantity could be identified prior to awarding the contract.

**5.2.** The value of the work actually performed or goods/equipment provided by the certified VOSB/SDVOSB vendor shall be counted towards the goal. The entire amount of that portion of the contract that is performed by the certified VOSB/SDVOSB vendor, including supplies purchased or equipment leased by the certified VOSB/SDVOSB vendor shall be counted, except supplies purchased and equipment rented from the Prime Vendor submitting this bid or offer.

**5.3.** A vendor shall count the portion of the total dollar value of the Veteran Small Business contract equal to the distinct, clearly defined portion of the work of the contract that the certified VOSB/SDVOSB vendor performs toward the goal. A vendor shall also count the dollar value of work subcontracted to other certified VOSB/SDVOSB vendor. Work performed by the non-certified VOSB/SDVOSB party shall not be counted toward the goal. **Work that a certified VOSB/SDVOSB vendor subcontracts to a non-certified VOSB/SDVOSB vendor will not count towards the goal.**

**5.4.** A Vendor shall count toward the goal 100% of its expenditures for materials and supplies required under the

contract and obtained from a certified VOSB/SDVOSB manufacturer; 60% of the cost of the materials or supplies required under the contract and obtained from a certified VOSB/SDVOSB regular dealer or supplier shall count toward the VOSB/SDVOSB goal. A Vendor shall count toward the goal the following expenditures to certified VOSB/SDVOSB vendors that are not manufacturers, regular dealers, or suppliers:

5.4.1. The fees or commissions charged for providing a bona fide service, such as professional, technical, consultant or managerial services and assistance in the procurement of essential personnel, facilities, equipment, materials or supplies required for performance of the contract, provided that the fee or commission is determined by the Agency to be reasonable and not excessive as compared with fees customarily allowed for similar services.

5.4.2. The fees charged for delivery of materials and supplies required by the contract (but not the cost of the materials and supplies themselves) when the hauler, trucker, or delivery service is not also the manufacturer or a supplier of the materials and supplies being procured, provided that the fee is determined by the Agency to be reasonable and not excessive as compared with fees customarily allowed for similar services. The certified VOSB/SDVOSB vendor's trucking firm must be responsible for the management and supervision of the entire trucking operation for which it is responsible on the contract, and must itself own and operate at least one fully licensed, insured and operational truck used on the contract.

5.4.3. The fees or commissions charged for providing any bonds or insurance specifically required for the performance of the contract, provided that the fee or commission is determined by the Agency to be reasonable and not excessive as compared with fees customarily allowed for similar services.

**5.5.** Certified VOSB/SDVOSB vendors who are performing on contract as second tier subcontractors may be counted in meeting the established Veteran Small Business goal for this contract as long as the Prime Vendor can provide documentation indicating the utilization of these vendors.

**5.6.** A Vendor shall count towards the goal only expenditures to firms that perform a commercially useful function in the work of the contract.

5.6.1. A firm is considered to perform a commercially useful function when it is responsible for execution of a distinct element of the work of a contract and carries out its responsibilities by actually performing, managing, and supervising the work involved. The certified VOSB/SDVOSB vendor must also be responsible, with respect to materials or supplies used on the contract, for negotiating price, determining quality and quantity, ordering the materials or supplies, and installing the materials (where applicable) and paying for the material or supplies. To determine whether a firm is performing a commercially useful function, the Agency shall evaluate the amount of work subcontracted, whether the amount the firm is to be paid under the contract is commensurate with the work it is actually performing and the credit claimed for its performance of the work, industry practices, and other relevant factors.

5.6.2. A certified VOSB/SDVOSB vendor does not perform a commercially useful function if its role is limited to that of an extra participant in a transaction or contract through which funds are passed through in order to obtain certified VOSB/SDVOSB vendor participation. In determining whether a certified VOSB/SDVOSB vendor is such an extra participant, the Agency shall examine similar transactions, particularly those in which certified VOSB/SDVOSB vendors do not participate, and industry practices.

**5.7.** A Vendor shall not count towards the goal expenditures that are not direct, necessary and related to the work of the contract. Only the amount of services or goods that are directly attributable to the performance of the contract shall be counted. Ineligible expenditures include general office overhead or other Vendor support activities.

6. **Good Faith Effort Procedures:** Vendor must submit a Utilization Plan (VOSB Form 2026) and Participation Statement(s)(VOSB Form 2025) that meet or exceed the published goal. If Vendor cannot meet the stated goal,

Vendor must document and explain via VOSB Form 2023 the good faith efforts it undertook to meet the goal. Utilization Plan, Participation Statement(s) and Good Faith Effort are due at the time of bid or offer submission. **Vendors will not be permitted to correct goal deficiencies after bid or offer due dates.** CMS or the State Agency, as its delegate, will consider the quality, quantity, and intensity of Vendor's efforts.

The Utilization Plan contains a checklist of actions that CMS or the State Agency, as its delegate, will consider as evidence of Vendor's good faith efforts to meet the goal. Other factors or efforts brought to the attention of CMS or the State Agency, as its delegate, may be relevant in appropriate cases.

**6.1.** In evaluating Vendor's good faith efforts, CMS or the State Agency, as its delegate, may consider whether the ability of other Bidders or offerors to meet the contract goal suggests that good faith efforts could have resulted in Vendor meeting the goal.

**6.2** If CMS or the State Agency, as its delegate, determines that Vendor has made good faith efforts to meet the goal, the Agency may award the contract provided that Vendor is otherwise eligible for award.

**6.3.** If CMS or the State Agency, as its delegate, determines that good faith efforts have not been met, the bid or offer may be determined to be non-responsible by the Chief Procurement Office.

7. **Contract Compliance:** Compliance with this section is an essential part of the contract. The following administrative procedures and remedies govern Vendor's compliance with the contractual obligations established by the Utilization Plan. After approval of the Plan and award of the contract, the Utilization Plan becomes part of the contract. If Vendor did not succeed in obtaining certified VOSB/SDVOSB vendor participation to achieve the goal and the Utilization Plan was approved and contract awarded based upon a determination of good faith, the total dollar value of certified VOSB/SDVOSB vendor work calculated in the approved Utilization Plan as a percentage of the awarded contract value shall become the contract goal.

**7.1.** The Utilization Plan may not be amended after contract execution without the Agency's prior written approval.

**7.2.** **Vendor may not make changes to its contractual certified VOSB/SDVOSB vendor commitments or substitute certified VOSB/SDVOSB vendors without the prior written approval of the Agency.** Unauthorized changes or substitutions, including performing the work designated for a certified VOSB/SDVOSB vendor with Vendor's own forces, shall be a violation of the utilization plan and a breach of the contract, and shall be cause to terminate the contract, and/or seek other contract remedies or sanctions. The facts supporting the request for changes must not have been known nor reasonably should have been known by the parties prior to entering into the subcontract. Vendor must negotiate with the certified VOSB/SDVOSB vendor to resolve the problem. Where there has been a mistake or disagreement about the scope of work or goods/equipment, provided the certified VOSB/SDVOSB vendor can be substituted only where agreement cannot be reached for a reasonable price or schedule for the correct scope of work, goods or equipment.

**7.3.** Substitutions of a certified VOSB/SDVOSB vendor may be permitted under the following circumstances:

7.3.1. Unavailability after receipt of reasonable notice to proceed;
7.3.2. Failure of performance;
7.3.3. Financial incapacity;
7.3.4. Refusal by the certified VOSB/SDVOSB vendor to honor the bid or bid price or scope;
7.3.5. Material mistake of fact or law about the elements of the scope of work of a solicitation where a reasonable price cannot be agreed;
7.3.6. Failure of the certified VOSB/SDVOSB vendor to meet insurance, licensing or bonding requirements;

7.3.7. The certified VOSB/SDVOSB vendor's withdrawal of its bid or offer; or
7.3.8. Decertification of the certified VOSB/SDVOSB vendor.

**7.4.** If it becomes necessary to substitute a certified VOSB/SDVOSB vendor or otherwise change the Utilization Plan, Vendor must notify the Agency in writing of the request to substitute a certified VOSB/SDVOSB vendor or otherwise change the Utilization Plan. The request must state specific reasons for the substitution or change. The Agency will approve or deny a request for substitution or other change in the Utilization Plan within five business days of receipt of the request.

**7.5.** Where Vendor has established the basis for the substitution to the Agency's satisfaction, it must make good faith efforts to meet the contract goal by substituting a certified VOSB/SDVOSB vendor. Documentation of a replacement certified VOSB/SDVOSB vendor, or of good faith efforts to replace the certified VOSB/SDVOSB vendor, must meet the requirements of the initial Utilization Plan. If the goal cannot be reached and good faith efforts have been made, Vendor may substitute with a non-certified VOSB/SDVOSB vendor or Vendor may perform the work.

**7.6.** If a Vendor plans to hire a subcontractor for any scope of work that was not previously disclosed in the Utilization Plan, Vendor must obtain the approval of the Agency to modify the Utilization Plan and must make good faith efforts to ensure that certified VOSB/SDVOSB vendors have a fair opportunity to submit a bid or offer on the new scope of work.

**7.7.** A new certified VOSB/SDVOSB vendor agreement must be executed and submitted to the Agency within five business days of Vendor's receipt of the Agency's approval for the substitution or other change.

**7.8.** Vendor shall maintain a record of all relevant data with respect to the utilization of certified VOSB/SDVOSB vendors, including but without limitation, payroll records, invoices, canceled checks and books of account for a period of at least five years after the completion of the contract. Full access to these records shall be granted by Vendor in a timely fashion upon written demand by the Agency to any duly authorized representative thereof, or to any municipal, state or federal authorities. The Agency shall have the right to obtain from Vendor any additional data reasonably related or necessary to verify any representations by Vendor. After the performance of the final item of work or delivery of material by the certified VOSB/SDVOSB vendor and final payment to the certified VOSB/SDVOSB vendor by Vendor, but not later than 30 calendar days after such payment, Vendor shall submit a statement confirming the final payment and the total payments made to the certified VOSB/SDVOSB vendor under the contract.

**7.9.** The Agency will periodically review Vendor's compliance with these provisions and the terms of its contract. Without limitation, Vendor's failure to comply with these provisions or its contractual commitments as contained in the Utilization Plan, failure to cooperate in providing information regarding its compliance with these provisions or its Utilization Plan, or provision of false or misleading information or statements concerning compliance, certification status or eligibility of the certified VOSB/SDVOSB vendor, good faith efforts or any other material fact or representation shall constitute a material breach of this contract and entitle the Agency to declare a default, terminate the contract, or exercise those remedies provided for in the contract or at law or in equity.

**7.10.** The Agency reserves the right to withhold payment to Vendor to enforce these provisions and Vendor's contractual commitments. Final payment shall not be made pursuant to the contract until Vendor submits sufficient documentation demonstrating compliance with its Utilization Plan.

ILLINOIS STATE TOLL HIGHWAY AUTHORITY
VOSB FORM 2026 - UTILIZATION PLAN

PRIME CONTRACTOR:_____
CONTACT NAME:_____
CONTACT PHONE NUMBER:_____
CONTACT E-MAIL:_____

CONTRACT NUMBER_____

Check one:

☐ Contractor will meet or exceed the VOSB Contract Goal and will provide Veteran Owned Small Business Participation as presented below.

☐ Contractor will meet or exceed the VOSB Contract Goal because PRIME BIDDER IS A VOSB.

☐ Contractor requests a waiver of the VOSB Contract Goal.

The Bidder is requesting the contract Goal be accordingly modified or waived. Attached is all information required by the Veteran Small Business Participation and Utilization Plan-Construction in support of this request, including Good Faith Efforts - Form 2023.

DOLLAR AMOUNT OF WAIVER REQUEST:_____

PERCENTAGE OF WAIVER REQUEST: _____

Instructions to Bidders:

1. Bidders are required to comply with the Veteran Small Business Participation and Utilization Plan - Construction
2. Submit only one Veteran Utilization Plan for each Project.
3. This Utilization Plan, Form 2026 must:
   --be submitted with the bid or the bid may be deemed non-responsive
   --be an accurate representation of work and pricing agreed upon between the prime and the Veteran firm prior to bid submission
4. The Participation Statement(s) (VOSB Form 2025), with original signatures, pay item description and pricing are to be submitted to Tollway Diversity at constructionbid@getipass.com by 5 p.m. on the fifth calendar day after notification to the prime by the Tollway of apparent low Bidder status.
5. Each company listed on the Utilization Plan and subsequent Participation Statement must be listed in a certifying agency's database as stipulated in the Special Provision at the time of bid submission to be considered acceptable for Veteran credit.
6. In no case should a Contractor remove, replace or reduce the commitment to a Veteran firm listed in the initial Utilization Plan on the Participation Statement without prior written consent of ISTHA. Under no circumstances is the Bidder allowed to change the amount of the core bid submitted or any other documentation unrelated to this special provision.

**VOSB UTILIZATION PLAN**

| VOSB Firm Name | Scope of Work<br>Brief description of overall work to be performed | VOSB - Amount ($)<br>If supplier, enter 60% credit amount. |
|---|---|---|
| | | |
| | | |
| | | |
| | | |
| | | |
| | | |
| | | |
| | | |
| | | |
| | | |
| | TOTAL | |

For ebid: the submission of Form 2026 constitutes signature of this form.
For hardcopy: signature required.

_____
Signature

Form 2026 - 03/2018

Date: 6/25/2019

To: Contact Name: Tim Polk

Contractor Company Name: Walsh Construction Company II, LLC

From Deanna Dinkel

DBE Project Specialist

*Please note in accordance with the Procurement code (30 ILCS 500), section 50-11 prohibits a person from entering into a contract with a State agency, or entering into a sub-contract, if it, or any affiliate, is delinquent in the payment of any debt to the State, unless the person or affiliate has entered into a deferred payment plan to pay off the debt. (Procurement reform bill can be referenced on the Illinois Tollway website)*

Subject: **VOSB Plan Review** **Date Original Plan Submitted:** 6/25/2019 **Revision #** 0

**Contract #** I-18-4428 **Established VOSB Goal:** 1.00 %

**Contract Description:** Bridge Reconstruction (BN 261) - Burlington Northern Santa Fe Railway (BNSF) over the Tri-State Tollway (I-294) - Mile Post 26.6

[ X ] Contractor's plan as submitted meets the established VOSB goal for this contract

Notes:

**VOSB Plan as Submitted by apparent low bidder:**

**Core Bid Amount** **$56,402,869.87**

| VOSB Firm Name | Status (SB/Sup/TK) | Type | Scope | Contract Amount | Credit Amount | Credit % | Certifying Agency | Gender | Ethnicity |
|---|---|---|---|---|---|---|---|---|---|
| Industrial Fence, Inc. | SB | VOSB | Fence & Guardrail | $1,149,079.60 | $1,149,079.60 | 2.03 % | CMS | M | Hispanic |
| **Total # of subcontracts: 1** | | | **TOTAL** | **$1,149,079.60** | **$1,149,079.60** | **2.03 %** | | | |
| **Total # of subcontractors: 1** | | | **Total %** | **2.03 %** | **2.03 %** | | | | |

Illinois Tollway

**ILLINOIS STATE TOLL HIGHWAY AUTHORITY**
**VOSB FORM 2026 - UTILIZATION PLAN**

**PRIME CONTRACTOR:** Walsh Construction Company II, LLC
**CONTACT NAME:** Tim Polk
**CONTACT PHONE NUMBER:** 312 563 5400
**CONTACT E-MAIL:** tpolk@walshgroup.com

**CONTRACT NUMBER** I-18-4428

Check one:

☒ Contractor will meet or exceed the VOSB Contract Goal and will provide Veteran Owned Small Business Participation as presented below.

☐ Contractor will meet or exceed the VOSB Contract Goal because PRIME BIDDER IS A VOSB

☐ Contractor requests a waiver of the VOSB Contract Goal.

The Bidder is requesting the contract Goal be accordingly modified or waived. Attached is all information required by the Veteran Small Business Participation and Utilization Plan-Construction in support of this request, including Good Faith Efforts - Form 2023.

DOLLAR AMOUNT OF WAIVER REQUEST: _____

PERCENTAGE OF WAIVER REQUEST: _____

Instructions to Bidders:

1. Bidders are required to comply with the Veteran Small Business Participation and Utilization Plan - Construction
2. Submit only one Veteran Utilization Plan for each Project.
3. This Utilization Plan, Form 2026 must:
   --be submitted with the bid or the bid may be deemed non-responsive
   --be an accurate representation of work and pricing agreed upon between the prime and the Veteran firm prior to bid submission
4. The Participation Statement(s) (VOSB Form 2025), with original signatures, pay item description and pricing are to be submitted to Tollway Diversity at constructionbid@getipass.com by 5 p.m. on the fifth calendar day after notification to the prime by the Tollway of apparent low Bidder status.
5. Each company listed on the Utilization Plan and subsequent Participation Statement must be listed in a certifying agency's database as stipulated in the Special Provision at the time of bid submission to be considered acceptable for Veteran credit.
6. In no case should a Contractor remove, replace or reduce the commitment to a Veteran firm listed in the initial Utilization Plan on the Participation Statement without prior written consent of ISTHA. Under no circumstances is the Bidder allowed to change the amount of the core bid submitted or any other documentation unrelated to this special provision.

**VOSB UTILIZATION PLAN**

| VOSB Firm Name | Scope of Work<br>Brief description of overall work to be performed | VOSB - Amount ($)<br>If supplier, enter 60% credit amount. |
|---|---|---|
| | | |
| Industrial Fence Inc | Fence & Guardrail | $ 1,149,079.60 |
| | | |
| | | |
| | | |
| | | |
| | | |
| | | |
| | | |
| | | |
| | TOTAL | $ 1,149,079.60 |

For ebid: the submission of Form 2026 constitutes signature of this form [redacted]
For hardcopy: signature required

Signature

Form 2026 - 03/2018

*Illinois State Toll Highway Authority "ISTHA"*

VOSB FORM 2025 - VOSB PARTICIPATION STATEMENT FORM, PART 2

| CONTRACT # | I-18-4428 |
|---|---|

| VOSB FIRM NAME | Industrial Fence Inc. |
|---|---|
| CIRCLE ALL THAT APPLY | [VOSB] SDVOSB |

CHECK ALL THAT APPLY:

PRIME _____ JV PARTNER _____ SUBCONTRACTOR ✓ TRUCKER _____ SUPPLIER _____ MANUFACTURER _____

| SUBCONTRACTOR: | TIER 1 (SUB TO PRIME): [Y] N | TIER 2 OR BELOW: Y N | UNDER CONTRACT TO: |
|---|---|---|---|

This form must be completed for EACH veteran-owned business participating in the VOSB Utilization Plan. This form is due to the Tollway by 5:00 pm on the fifth calendar day after notification to the prime by the Tollway as low apparent bidder to constructionbid@getipass.com. If additional space is needed, complete an additional form(s) for the firm or attach a detailed information on VOSB firm company letterhead.

| PAY ITEM NO.* | DESCRIPTION: Indicate whether furnish only, or both furnish and install | QUANTITY | UNIT PRICE | TOTAL CONTRACT AMOUNT ($) | CHECK IF SUPPLIER | TOTAL VOSB CREDIT AMOUNT ($) (reduced to 60% of contract amount if firm is a SUPPLIER) |
|---|---|---|---|---|---|---|
| | | | | | | |
| Various | Fence + Guardrail | ILS | | See attached | | |
| | | | | | | |
| | | | | | | |
| | | | | | | |
| | | TOTALS FOR THIS VOSB FIRM: | | $1,149,679.60 | | |

*Contingency Work must not be included under Pay Items and will not be approved toward VOSB goal participation until such time as those Pay Items have been confirmed as required work of the contract. Direct Allowance Items, including but not limited to Mobilization Item #IS671010, will not be approved within the VOSB Utilization Plan. NOTE that these items are not included in the determination of the VOSB Goal percentage.

1. **PARTIAL PAY ITEMS:** For any of the above ITEMS that are partial pay items, specifically describe the work and subcontract dollar amount.

2. **COMMITMENT:** The undersigned certify that the information herein is true and correct, and that the VOSB listed below has agreed to perform a commercially-useful function in the work of the contract/item(s) listed above and to execute a contract to that effect with the Prime Contractor. The undersigned further understand that NO CHANGES to the type or scope of work performed by the VOSB may be made without PRIOR WRITTEN APPROVAL and that complete and accurate information regarding actual work performed by the VOSB on this contract and the payment thereto must be provided to ISTHA's Department of Diversity and Strategic Development. The Prime Contractor will not assign any of the contract items listed above to a firm other than the VOSB identified below without ISTHA's prior written approval. The Prime Contractor must request, in writing, approval by ISTHA's Diversity and Strategic Development Department of any proposed amendment to the type or scope of work to be performed by the VOSB no later than th[redacted]ess days from the date the Prime Contractor becomes aware of the circumstances supporting the request. Failure to receive written approval prior to a change in type or [redacted]DIS VETERAN SMALL BUSINESS PARTICPATION AND UTILIZATION PLAN and [redacted] the contractor to contract sanctions.

| Signature for Prime Contractor | Title | Date |
|---|---|---|
| [redacted] | Chief Estimator | 6/25/19 |

Contact: Tim Polk
Firm Name: Walsh Construction Co. II, LLC
E-mail: tpolk@walshgroup.com
Phone: 312-563-5400
Address: 929 W. Adams St. Chicago, IL 60607

| Signature for VOSB Contractor | Title | Date |
|---|---|---|
| [redacted] | President | 06/12/2019 |

Contact: Miguel A. Saltijeral
Firm Name: Industrial Fence Inc.
E-mail: msaltijeral@industrialfenceinc.com
Phone: 773-521-9900
Address: 1300 S. Kilbourn Avenue Chicago, IL 60623

# Unified Certification Program - Search

**Contractor Details**

Browse F.A.Q. Sheet (/UCP/Search/Help)

Print

**Industrial Fence, Inc.**
Miguel A. Saltijeral
1300 S. Kilbourn Ave
Chicago, IL 60623-0000

**County:** Cook

**Email:** atutje@industrialfenceinc.com

**Phone:** 773-521-9900

**Fax:** 773-521-9904

**Categories:** Construction, Manufacturing

| NAICS | Speciality |
|---|---|
| 237310 - Highway, Street, and Bridge Construction | NAICS 237310 Highway, Street, and Bridge Construction NAICS 332312 Fabricated structural metal manufacturing |
| 332312 - Fabricated structural metal manufacturing | |

© 2017 Illinois Department of Transportation

Version: 1.1.27.5458

## THE ILLINOIS STATE TOLL HIGHWAY AUTHORITY (TOLLWAY)

### CONTRACT NO. I-18-4428

### BRIDGE RECONSTRUCTION (BN 261) BURLINGTON NORTHERN SANTA FE (BNSF) RAILWAY OVER

### THE TRI-STATE TOLLWAY (I-294)

### MILE POST 26.6

### SCHEDULE OF PRICES

| SP | PAY ITEM NUMBER | DESIGNATION | UNIT | QUANTITY | UNIT PRICE DOLLAR | AMOUNT DOLLAR |
|---|---|---|---|---|---|---|
| | 50901760 | PIPE HANDRAIL | FOOT | 248 | $ 142.00 | $ 35,216.00 |
| | 63200310 | GUARDRAIL REMOVAL | FOOT | 902 | $ 7.46 | $ 6,728.92 |
| | 70600280 | IMPACT ATTENUATORS, TEMPORARY (SEVERE USE,NARROW), TEST LEVEL 3 | EACH | 8 | $ 12,625.96 | $ 101,007.68 |
| | 70600370 | IMPACT ATTENUATORS, RELOCATE (SEVERE USE, NARROW), TEST LEVEL 3 | EACH | 82 | $ 3,592.21 | $ 294,561.22 |
| * | X0326998 | FURNISH AND INSTALL HANDRAIL | FOOT | 1,270 | $ 219.98 | $ 279,374.60 |
| * | X6640050 | CHAIN LINK FENCE, 42" ATTACHED TO STRUCTURE (SPECIAL) | FOOT | 1,683 | $ 35.38 | $ 59,544.54 |
| * | X6640312 | CHAIN LINK GATES TO BE REMOVED AND RE-ERECTED | EACH | 2 | $ 2,331.54 | $ 4,663.08 |
| * | Z0022800 | FENCE REMOVAL | FOOT | 644 | $ 6.98 | $ 4,492.24 |
| * | JI630002 | GALVANIZED STEEL PLATE BEAM GUARDRAIL, TYPE A, 6 FOOT POSTS | FOOT | 1,225 | $ 29.10 | $ 35,647.50 |
| * | JI631110 | TRAFFIC BARRIER TERMINAL, TYPE T1 (SPECIAL) TANGENT | EACH | 1 | $ 3,870.26 | $ 3,870.26 |
| * | JI631120 | TRAFFIC BARRIER TERMINAL, TYPE T2 | EACH | 3 | $ 1,370.80 | $ 4,112.40 |
| * | JI631135 | TRAFFIC BARRIER TERMINAL, TYPE T98 | EACH | 1 | $ 4,124.85 | $ 4,124.85 |
| * | JI664305 | RIGHT-OF-WAY FENCE, TYPE 1, 6' | FOOT | 3,150 | $ 16.55 | $ 52,132.50 |
| * | JI664310 | CORNER POST, RIGHT-OF-WAY FENCE, TYPE 1 | EACH | 9 | $ 615.60 | $ 5,540.40 |
| * | JI664315 | PULL POST, RIGHT-OF-WAY FENCE, TYPE 1 | EACH | 15 | $ 615.60 | $ 9,234.00 |
| * | JI664320 | END POST, RIGHT-OF-WAY FENCE, TYPE 1 | EACH | 11 | $ 615.60 | $ 6,771.60 |
| * | JI664325 | PEDESTRIAN GATE, RIGHT-OF-WAY FENCE, TYPE 1 | EACH | 5 | $ 1,621.46 | $ 8,107.30 |
| * | JI664400 | RIGHT OF WAY FENCE REMOVAL | FOOT | 4,596 | $ 7.32 | $ 33,642.72 |
| * | JI664620 | TEMPORARY CHAIN LINK FENCE 8' SCREENING, TYPE 2 | FOOT | 7,278 | $ 27.50 | $ 200,145.00 |
| * | JI725000 | TERMINAL MARKER - DIRECT APPLIED | EACH | 1 | $ 47.99 | $ 47.99 |

## THE ILLINOIS STATE TOLL HIGHWAY AUTHORITY (TOLLWAY)

CONTRACT NO. I-18-4428

BRIDGE RECONSTRUCTION (BN 261) BURLINGTON NORTHERN SANTA FE (BNSF) RAILWAY OVER

THE TRI-STATE TOLLWAY (I-294)

MILE POST 26.6

SCHEDULE OF PRICES

| SP | PAY ITEM NUMBER | DESIGNATION | UNIT | QUANTITY | UNIT PRICE DOLLAR | AMOUNT DOLLAR |
|---|---|---|---|---|---|---|
| * | JI782014 | GUARDRAIL BARRIER REFLECTORS, TYPE B | EACH | 13 | $ 9.60 | $ 124.80 |
| | | | | | TOTAL AMOUNT OF CORE WORK: | $ 1,149,079.60 |

LEGEND FOR SP COLUMN

- * INDICATES SPECIAL PROVISION
- ** INDICATES TOLLWAY SUPPLEMENTAL SPECIFICATIONS
- *** INDICATES IDOT RECURRING SPECIAL PROVISION
- BDE INDICATES IDOT BDE SPECIAL PROVISION
- GBSP INDICATES IDOT GUIDE BRIDGE SPECIAL PROVISION

INDUSTRIAL FENCE, INC.
1300 S. KILBOURN AVENUE
[redacted]

SIGNATURE [redacted]
Miguel A. Saltijeral
BY

Certified Profile

CLOSE WINDOW

Print

## Business & Contact Information

| | |
|---|---|
| BUSINESS NAME | **Industrial Fence, Inc.** |
| OWNER | **Mr. Miguel A. Saltijeral** |
| ADDRESS | **1300 S. Kilbourn Ave**<br>**Chicago, IL 60623** |
| PHONE | **773-521-9900** |
| FAX | **773-521-9904** |
| EMAIL | **msaltijeral@industrialfenceinc.com** |
| WEBSITE | **http://www.industrialfenceinc.com** |
| ETHNICITY | **Hispanic** |
| GENDER | **Male** |
| COUNTY | **Cook (IL)** |

Map This Address

## Certification Information

| | |
|---|---|
| CERTIFYING AGENCY | **State of Illinois Central Management Services** |
| CERTIFICATION TYPE | **VOSB - Veteran Owned Small Business** |
| RENEWAL DATE | **7/22/2019** |
| EXPIRATION DATE | **7/22/2019** |
| CERTIFIED BUSINESS DESCRIPTION | **Fencing, Concrete or Rock,**<br>**Bumper and Guard Rails, Poly, (See Class 570 for Metal Type),**<br>**Fence Installation, Maintenance and Repair** |

## Commodity Codes

| Code | Description |
|---|---|
| NIGP 33010 | Fencing, Concrete or Rock |
| NIGP 66523 | Bumper and Guard Rails, Poly. (See Class 570 for Metal Type) |
| NIGP 98815 | Fence Installation, Maintenance and Repair |

## Additional Information

**VOSB FORM**
**2023**

## Demonstration of Good Faith Efforts to Achieve VOSB Construction Subcontracting Goal

If the VOSB contract goal was not achieved, the Good Faith Efforts checklist and contacts log must be submitted with the bid. Failure to do so may render the Bidder's solicitation response non-responsive and cause it to be rejected, or render the Bidder ineligible for contract award, at ISTHA's sole discretion. The Bidder must provide all evidence relied upon in support of its Good Faith Efforts with its bid.

### Good Faith Efforts Checklist

Insert on each line below the initials of the authorized Bidder representative who is certifying the Bidder has completed the activities described below. If any of the items were not completed, attach a detailed written explanation. If any other efforts were made to obtain VOSB/SDVOSB participation in addition to the items listed below, attach a detailed written explanation.

X Utilize the Sell2Illinois website to identify certified VOSB/SDVOSB vendors within the respective commodity/service codes and at a minimum email all listed vendors and solicit quotes from all vendors who express an interest via follow-up emails or telephone calls.

- https://www2.illinois.gov/cms/business/sell2/Pages/VendorSearch.aspx

X Identified portions of the contract work capable of performance by available VOSBs/SDVOSBs, including, where appropriate, breaking out contract work items into economically feasible units to facilitate VOSB/SDVOSB participation even when the Bidder could perform those scopes with its own forces.

X Make a portion of the work available to certified VOSB/SDVOSB vendors and selecting those portions of the work or material needs consistent with their availability, so as to facilitate certified VOSB/SDVOSB vendor participation.

X Solicited through reasonable and available means (e.g., pre-bid meetings, networking session, written notices, advertisements) VOSBs/SDVOSBs to perform the types of work that could be subcontracted on this project, within sufficient time to allow them to respond. Vendor must determine with certainty if the certified VOSB/SDVOSB vendors are interested by taking appropriate steps to follow up initial solicitations and encourage them to submit a bid.

X Provided timely and adequate information about the plans, specifications and requirements of the contract. Followed up initial solicitations to answer questions and encourage VOSBs/SDVOSBs to submit bids.

X Negotiated in good faith with interested VOSBs/SDVOSBs that submitted bids and thoroughly investigated their capabilities. Evidence of such negotiation must include the names, addresses, email addresses, and telephone numbers of certified VOSB/SDVOSB vendors that were considered; a description of the information provided regarding the plans and specifications for the work selected for subcontracting and evidence as to why additional agreements could not be reached for certified VOSB/SDVOSB vendors to perform the work. A Vendor using good business judgment may consider a number of factors in negotiating with certified VOSB/SDVOSB vendors and may take a firm's price and capabilities into consideration. The fact that there may be some additional costs involved in finding and using certified VOSB/SDVOSB vendors may not be in itself sufficient reason for a Vendor's failure to meet the goal, as long as such costs are reasonable. Vendors are not required to accept higher quotes from certified VOSB/SDVOSB vendors if the price difference is excessive or unreasonable. The certified VOSB/SDVOSB vendor's memberships in specific groups, organizations, or associations and political or social affiliations are not legitimate causes for the rejection or non-solicitation of bids in Vendor's efforts to meet the goal.

# VOSB FORM 2023 page 2

X Made efforts to assist interested VOSBs/SDVOSBs in obtaining bonding, lines of credit, or insurance as may be required for performance of the contract (if applicable).

X Made efforts to assist interested certified VOSB/SDVOSB vendors in obtaining necessary equipment, supplies, materials, or related assistance or services.

X Utilized resources available to identify available VOSBs/SDVOSBs, including but not limited to VOSB/SDVOSB assistance groups; local, state and federal business assistance offices; and other organizations that provide assistance in the recruitment and placement of VOSBs/SDVOSBs.

**Affidavit of Truthfulness: Signature below affirms accuracy of Good Faith Efforts and authority to provide above information**

Print Name: Sean C Walsh [redacted]

Position: President [redacted]

Signature: [redacted]

Phone contact: 312.563..5400

E-mail address: dshier@walshgroup.com

Date: 6/6/2019

Illinois Tollway

# VOSB FORM 2023

## Good Faith Efforts Contacts Log for Soliciting - VOSB Participation: Form 2023 continued

Project name: Bridge Reconstruction Burlington Nothern Santa Fe Railway (BNSF) Over the Tri-State Tollway (I-294) Project number: I-18-4428

Bidder name: Walsh Construction Company II, LLC Contact person: Tim Polk

Use this form to document all contacts and responses (telephone, e-mail, fax, etc.) regarding the solicitation of VOSBs/SDVOSBs. Duplicate as needed.

| Name of VOSB/SDVOSB | Date and method of contact | Scope of work solicited | Reason agreement was not reached |
|---|---|---|---|
| | Please see Good Faith Effort Book | | |
| | | | |
| | | | |
| | | | |

**Affidavit of Truthfulness:** Signature below affirms accuracy of Good Faith Efforts and authority to provide above information

**Print Name:** Sean C Walsh **Phone contact:** 312.563.5400

**Position:** President [redacted] **E-mail address:** dshier@walshgroup.com

**Signature:** [redacted] **Date:** 6/6/2019

ILLINOIS STATE TOLL HIGHWAY AUTHORITY

SPECIAL PROVISION

FOR

BID CREDIT INCENTIVE PROGRAMS

## 1. OBJECTIVE OF THE BID CREDIT INCENTIVE PROGRAM

The TOLLWAY offers programs allowing a contractor or subcontractor/fabricator to earn BID CREDITs to be used toward future TOLLWAY construction bids. A Bidder can then apply its BID CREDITs to a maximum BID CREDIT CAP assigned by the TOLLWAY to each contract in order to lower their bid amount and increase the chances of winning the contract as the low Bidder.

Use of BID CREDITs from the BID CREDIT Incentive Programs is applicable only to construction projects advertised by the TOLLWAY for public bidding.

Current TOLLWAY BID CREDIT Programs are:

- ConstructionWorks (CW) Program: encouraging contractors to employ and retain qualified and eligible CW individuals enrolled in the CW Program, including African Americans, Asians, Hispanic, Ex-offenders, exonerated individuals, Females, Veterans and other traditionally underserved populations.
- Earned Credit Program (ECP): encouraging contractors to employ and retain qualified and eligible Workforce Innovation and Opportunity Act eligible individuals, including African Americans, Asians, Hispanic, Ex-offenders, exonerated individuals, Females, Veterans and other traditionally underserved populations.
- Partnering for Growth – Construction (P4G-Con): encouraging contractors to mentor a Disadvantaged Business Enterprise or Veteran-owned Small Business protégé firm.

For more information, reference the Operational Guide for each program on the TOLLWAY's website, https://www.illinoistollway.com/doing-business/diversity-development/programs.

## 2. DEFINITIONS

*ACTIVE BID CREDIT CERTIFICATE REGISTER*: Listing of all active BID CREDIT CERTIFICATEs for all BID CREDIT programs indicating certificate number, value, owner and issue date.

*ACTIVE BID CREDITS*: BID CREDITs available for submission and utilization on a construction bid.

*AWARD CRITERIA*: Contractor's BASE BID minus BID CREDIT submitted subject to the BID CREDIT CAP identified for each solicitation.

*BASE BID*: The bid amount prior to applying BID CREDITS SUBMITTED.

*BID CREDIT*: Virtual dollar credits earned through a TOLLWAY BID CREDIT Program.

*BID CREDIT ALLOCATION*: When BID CREDITS SUBMITTED by a prime contractor and subcontractor/fabricator are applied proportionally to the total of all the BID CREDITs originally submitted with the bid.

*BID CREDIT CAP*: A contract-specific limit as determined by an approved TOLLWAY formula on the amount of ACTIVE BID CREDITs that can be applied as BID CREDITS. Any BID CREDITS SUBMITTED above and beyond the BID CREDIT CAP will not be considered.

*BID CREDIT CERTIFICATE*: A numbered document that identifies certificate number, value, owner and issue date.

*BID CREDITS SUBMITTED*: BID CREDITs included in a construction bid as evidenced by a BID CREDIT CERTIFICATE. The total amount of the certificate(s) will be considered as tendered unless otherwise indicated on the physical certificate.

*BID CREDITS UTILIZED*: The amount of BID CREDITs required to establish the apparent low Bidder based on the difference between the award criterions of the lowest Bidder and the next apparent low Bidder plus $1.00 of BID CREDIT.

*INACTIVE BID CREDITS*: BID CREDIT not available for submission due to utilization on a construction bid or superseded by current ACTIVE BID CREDITs.

TOLLWAY: The Illinois State Toll Highway Authority.

## 3. EARNING BID CREDITS

Refer to the Operational Guides for active TOLLWAY BID CREDIT Programs as posted on the TOLLWAY's website, https://www.illinoistollway.com/doing-business/diversity-development/programs.

## 4. BIDDING PROCEDURES

All bids must comply with the applicable procurement statutes, rules and regulations and the specific requirements of each solicitation to be considered responsive. Bids that fail to meet these minimum requirements may be considered non-responsive.

4.1 Each bid solicitation will have a contract-specific total BID CREDIT CAP as determined by the approved TOLLWAY formula on the amount of BID CREDIT that can be applied.

4.2 Any credits applied above and beyond the BID CREDIT CAP will not be considered.

4.3 If needed, contractors can check the appropriate ACTIVE BID CREDIT CERTIFICATE REGISTER on the TOLLWAY's website to ensure BID CREDIT CERTIFICATES SUBMITTED are active.

4.4 The BID CREDIT CAP may be met by BID CREDITs:

4.4.1 Earned from one BID CREDIT program or from a combination of BID CREDIT programs, as BID CREDIT CERTIFICATEs are now issued as one certificate covering all BID CREDIT programs

4.4.2 Offered for submission by joint venture partners independently, and/or by subcontractors/fabricators independently, as per Section 5 below. If BID CREDITs from different firms are submitted on the same bid, the BID CREDITs are applied via BID CREDIT ALLOCATION as defined above proportionally to the amounts originally submitted on the bid.

4.5 Entering BID CREDITs on the bid forms:

- The BASE BID is to be clearly identified on line #1 of the P page;
- Line #2 is to include the total amount of BID CREDIT applied to the bid;
- Line #3 is to include the AWARD CRITERIA (Line #1 minus Line #2 equals Line #3).

4.6 All BID CREDIT CERTIFICATEs submitted to calculate the BID CREDIT included on Line #2 must be included in the original bid package.

4.7 All BID CREDITS UTILIZED to become or remain the successful Bidder will become unavailable for inclusion in any other bid at the time the Bidder's AWARD CRITERIA is deemed the lowest responsive and responsible bid.

4.8 The BID CREDIT CERTIFICATE(s) will be redeemed up to the amount needed plus $1 to allow the contractor's bid to be the lowest apparent bid for award of the contract and any unused remaining balance will be returned in the form of a BID CREDIT CERTIFICATE(s) to the contractor, or subcontractor/fabricator if applicable.

## 5. JOINT VENTURE AND SUBCONTRACTOR/FABRICATOR PARTICIPATION

5.1 Joint Venture partners who own BID CREDITS may independently submit BID CREDITS toward the joint venture bid subject to the overall BID CREDIT CAP.

5.2 Subcontractors/fabricators who own BID CREDITs may provide those BID CREDITS to prime contractors to be applied by prime contractors in a bid solicitation, provided the prime contractor has committed to utilizing the subcontractor/fabricator in the performance of the contract unless such use is prohibited for reasons beyond the prime contractor's control.

5.3 In the event that a subcontractor/fabricator becomes disqualified from contract participation by no fault of the prime, (i.e. delinquent debt, etc.) the actual ACTIVE BID CREDITS UTILIZED by the disqualified subcontractor/fabricator that factored into the apparent winning bid will not be refunded to the subcontractor's BID CREDIT certificate balance.

5.4 For subcontractor/fabricator BID CREDIT to be considered for utilization on a bid by a prime contractor:

5.4.1 The prime contractor must include BID CREDIT owned by the prime Bidder along with the BID CREDIT from the subcontractor/fabricator for application to the bid.

5.4.2 The amount of BID CREDITs submitted by the prime contractor shall be no less than the lowest dollar amount submitted by any subcontractor/fabricator application to the bid.

5.4.2.1 An allowance may be made in cases where the prime contractor's total BID CREDITs owned are less than those of the subcontractor/fabricator.

- In no case can the prime offer less than $1,000 in BID CREDITs.
- In instances where the prime has BID CREDITs but the total amount of the prime's BID CREDITs is less than any subcontractor's BID CREDITs offered with a bid, the prime's BID CREDITs will be utilized and exhausted before a subcontractor's BID CREDITs will be applied to the bid.

5.4.2.2 Failure to meet this standard will result in the BID CREDITS SUBMITTED not being considered.

5.4.3 The prime contractor is required to perform the following:

- Ensure that the subcontractor is aware of and has provided permission to the Bidder as indicated on the BID CREDIT CERTIFICATE to use the BID CREDIT CERTIFICATE in the bid solicitation;

- Identify the scope of work and dollar amount committed to each subcontractor/fabricator where a BID CREDIT CERTIFICATE is being calculated in the BID CREDIT;

- Ensure that the BID CREDIT CERTIFICATE is in active mode, which can be done through checking the ACTIVE BID CREDIT CERTIFICATE REGISTER on the TOLLWAY's website (www.illinoistollway.com and click on "Doing Business") prior to submitting a BID CREDIT BID CREDIT CERTIFICATE in a TOLLWAY bid solicitation;

5.4.4 Ensure that the total amount of BID CREDIT CERTIFICATEs does not exceed the contract-specific total BID CREDIT CAP. In the event of a successful bid, excess credits shall be returned via BID CREDIT ALLOCATION in proportion to what was originally submitted by the prime(s) and subcontractor/fabricator(s).

5.4.5 Insert a copy of this TOLLWAY SPECIAL PROVISION FOR BID CREDIT INCENTIVE PROGRAMS in each and every subcontract or joint venture agreement under this Contract and it shall become a material term of the subcontracts.

5.5 BID CREDITS SUBMITTED by the prime contractor, joint venture partner(s) and/or subcontractor/fabricator(s) are applied via BID CREDIT ALLOCATION, proportionally to the amounts originally submitted on the bid.

**6. LONGEVITY OF BID CREDIT CERTIFICATES**

6.1 Unused BID CREDITs do not expire.

6.2 BID CREDITs will become INACTIVE BID CREDITS once utilized in a successful bid.

6.3 Should the same BID CREDIT CERTIFICATE be submitted in multiple bids on the same date:

- Where multiple solicitations have the same bid opening date, the TOLLWAY will typically open bids in numerical order with the lowest project number per the last four digits of the contract being opened first.

- The first bid opened containing the BID CREDIT CERTIFICATE will be considered for bid.

- All other bids containing a duplicate BID CREDIT CERTIFICATE will be placed in a suspended mode until the award recommendation of the prior bid(s) has been issued.

- Until such time of award recommendation, all duplicate BID CREDIT CERTIFICATES will be inactivated as applicable and the remaining BID CREDIT(s) and AWARD CRITERIA will be recalculated for subsequent bids.

As an example: Bid 01 (RR-XX-1234) included BID CREDIT CERTIFICATE A for $100, Bid 02 (RR-XX-5678) also included BID CREDIT CERTIFICATE A for $100. Bid 01 utilized $50 of BID CREDIT CERTIFICATE A. Upon award recommendation of Bid 01, BID CREDIT CERTIFICATE A has $50 remaining available for consideration in Bid 02.

6.4 As stated in Section 4.8 above, the BID CREDIT CERTIFICATE(s) will be redeemed up to the amount needed plus $1 to allow the contractor's bid to be the lowest apparent bid for award of the contract and any unused remaining balance will be returned in the form of a revised BID CREDIT CERTIFICATE(s) to the contractor or subcontractor/fabricator if applicable.

## 7. FRAUDULENT USE OF BID CREDIT CERTIFICATES

Any contractor who knowingly submits an INACTIVE BID CREDITs shall be permanently barred from participating in any TOLLWAY BID CREDIT program.

Any contractor who submits a subcontractor/fabricator's BID CREDIT CERTIFICATE without the permission of the subcontractor/fabricator and/or without committing to utilizing the subcontractor/fabricator by scope of service and dollar value of commitment in the bid shall be permanently barred from participating in any TOLLWAY BID CREDIT program.

The TOLLWAY may report such reporting abuses to the Office of the Inspector General and applicable law enforcement authorities.

# ILLINOIS TOLLWAY
# STANDARD BUSINESS TERMS AND CONDITIONS

**ILLINOIS TOLLWAY CONTRACT NO.:** I-18-4428

**CONTRACTOR/CONSULTANT NAME:** Walsh Construction Company II, LLC

1. **PAYMENT TERMS AND CONDITIONS:**

1.1 Minority Contractor Initiative: Any Vendor awarded a contract under Section 20-10, 20-15, 20-25 or 20-30 of the Illinois Procurement Code (30 ILCS 500) of $1,000 or more is required to pay a fee of $15. The Comptroller shall deduct the fee from the first check issued to the Vendor under the contract and deposit the fee in the Comptroller's Administrative Fund. 15 ILCS 405/23.9.

1.2 Expenses: The State will not pay for supplies provided or services rendered, including related expenses, incurred prior to the execution of this contract by the Parties even if the effective date of the contract is prior to execution.

1.3 Prevailing Wage: As a condition of receiving payment Vendor must (i) be in compliance with the contract, (ii) pay its employees prevailing wages when required by law, (iii) pay its suppliers and subcontractors according to the terms of their respective contracts, and (iv) provide lien waivers to the State upon request. Examples of prevailing wage categories include public works, printing, janitorial, window washing, building and grounds services, site technician services, natural resource services, security guard and food services. The prevailing wages are revised by the Department of Labor and are available on the Department's official website, which shall be deemed proper notification of any rate changes under this subsection. Vendor is responsible for contacting the Illinois Department of Labor to ensure understanding of prevailing wage requirements at 217-782-6206 or (http://www.state.il.us/agency/idol/index.htm).

1.4 Federal Funding: This contract may be partially or totally funded with Federal funds. If federal funds are expected to be used, then the percentage of the good/service paid using Federal funds and the total Federal funds expected to be used will be provided in the award notice.

1.5 Invoicing: By submitting an invoice, Vendor certifies that the supplies or services provided meet all requirements of the contract, and the amount billed and expenses incurred are as allowed in the contract. Invoices for supplies purchased, services performed and expenses incurred through December 31 of any year must be submitted to the State no later than February 28 of the following year; otherwise Vendor may have to seek payment through the Illinois Court of Claims. 30 ILCS 105/25. All invoices are subject to statutory offset. 30 ILCS 210.

1.5.1 Vendor shall not bill for any taxes unless accompanied by proof that the State is subject to the tax. If necessary, Vendor may request the applicable Agency/University state tax exemption number and federal tax exemption information.

1.5.2 Vendor shall invoice at the completion of the contract unless invoicing is tied in the contract to milestones, deliverables, or other invoicing requirements agreed to in the contract.

2. **ASSIGNMENT**: This contract may not be assigned, transferred in whole or in part by Vendor without the prior written consent of the State.

THE ILLINOIS STATE TOLL HIGHWAY AUTHORITY

CONTRACT NO. I-18-4428

LIST OF INDIVIDUAL CONTACTS

The Bidder is hereby requested to list those individuals to be contacted for information regarding the analysis of the various portions of the Bid.

| ITEM | INDIVIDUAL | TELEPHONE NO. | E-MAIL |
|---|---|---|---|
| Schedule of Prices | Steven G Kehle<br>David Shier | 312.563.5400 | sgkehle@walshgroup.com<br>dshier@walshgroup.com |
| Bid Guaranty | David Shier | 312-563-5400 | dshier@walshgroup.com |
| DBE 2026 | David Shier | 312-563-5400 | dshier@walshgroup.com |
| EEO Program | David Shier | 312-563-5400 | dshier@walshgroup.com |
| VOSB 2026 | David Shier | 312-563-5400 | dshier@walshgroup.com |
| Financial Disclosures Forms A or Forms B | Timothy S Gerken | 312-563-5400 | tgerken@walshgroup.com |
| | | | |
| IDOT Certificate of Eligibility | David Shier | 312-563-5400 | dshier@walshgroup.com |
| Non-Collusion Affidavit – Page R-4 | David Shier | 312-563-5400 | dshier@walshgroup.com |

3. **AUDIT/RETENTION OF RECORDS:** Vendor and its subcontractors shall maintain books and records relating to the performance of the contract or subcontract and necessary to support amounts charged to the State pursuant the contract or subcontract. Books and records, including information stored in databases or other computer systems, shall be maintained by the Vendor for a period of five years from the later of the date of final payment under the contract or completion of the contract, and by the subcontractor for a period of five years from the later of final payment under the term or completion of the subcontract. Books and records required to be maintained under this section shall be available for review or audit by representatives of: the procuring Agency/University, the Auditor General, the Executive Inspector General, the Chief Procurement Officer, the Tollway Inspector General, State of Illinois internal auditors or other governmental entities with monitoring authority, upon reasonable notice and during normal business hours. Vendor and its subcontractors shall cooperate fully with any such audit and with any investigation conducted by any of these entities. Failure to maintain books and records required by this section shall establish a presumption in favor of the State for the recovery of any funds paid by the State under the contract for which adequate books and records are not available to support the purported disbursement. The Vendor or subcontractors shall not impose a charge for audit or examination of the Vendor's books and records. 30 ILCS 500/20-65.

4. **TIME IS OF THE ESSENCE:** Time is of the essence with respect to Vendor's performance of this contract. Vendor shall continue to perform its obligations while any dispute concerning the contract is being resolved unless otherwise directed by the State.

5. **NO WAIVER OF RIGHTS:** Except as specifically waived in writing, failure by a Party to exercise or enforce a right does not waive that Party's right to exercise or enforce that or other rights in the future.

6. **FORCE MAJEURE:** Failure by either Party to perform its duties and obligations will be excused by unforeseeable circumstances beyond its reasonable control and not due to its negligence, including acts of nature, acts of terrorism, riots, labor disputes, fire, flood, explosion, and governmental prohibition. The non-declaring Party may cancel the contract without penalty if performance does not resume within 30 days of the declaration.

7. **CONFIDENTIAL INFORMATION:** Each Party, including its agents and subcontractors, to this contract may have or gain access to confidential data or information owned or maintained by the other Party in the course of carrying out its responsibilities under this contract. Vendor shall presume all information received from the State or to which it gains access pursuant to this contract is confidential. Vendor information, unless clearly marked as confidential and exempt from disclosure under the Illinois Freedom of Information Act, shall be considered public. No confidential data collected, maintained, or used in the course of performance of the contract shall be disseminated except as authorized by law and with the written consent of the disclosing Party, either during the period of the contract or thereafter. The receiving Party must return any and all data collected, maintained, created or used in the course of the performance of the contract, in whatever form it is maintained, promptly at the end of the contract, or earlier at the request of the disclosing Party, or notify the disclosing Party in writing of its destruction. The foregoing obligations shall not apply to confidential data or information lawfully in the receiving Party's possession prior to its acquisition from the disclosing Party; received in good faith from a third Party not subject to any confidentiality obligation to the disclosing Party; now is or later becomes publicly known through no breach of confidentiality obligation by the receiving Party; or is independently developed by the receiving Party without the use or benefit of the disclosing Party's confidential information.

8. **USE AND OWNERSHIP:** All work performed or supplies created by Vendor under this contract, whether written documents or data, goods or deliverables of any kind, shall be deemed work for hire under copyright law and all intellectual property and other laws, and the State of Illinois is granted sole and exclusive ownership to all such work, unless otherwise agreed in writing. Vendor hereby assigns to the State all right, title, and interest in and to such work including any related intellectual property rights, and/or waives any and all claims that Vendor may have to such work including any so-called "moral rights" in connection with the work. Vendor acknowledges the

State may use the work product for any purpose. Confidential data or information contained in such work shall be subject to confidentiality provisions of this contract.

9. **INDEMNIFICATION AND LIABILITY:** The Vendor shall indemnify and hold harmless the Tollway and State of Illinois, their directors, agencies, officers, employees, agents and volunteers from any and all costs, demands, expenses, losses, claims, damages, liabilities, settlements and judgments, including in-house and contracted attorneys' fees and expenses, arising out of: (a) any breach or violation by Vendor of any of its certifications, representations, warranties, covenants or agreements; (b) any actual or alleged death or injury to any person, damage to any property or any other damage or loss claimed to result in whole or in part from Vendor's negligent performance; or (c) any negligent act, activity or omission of Vendor or any of its employees, representatives, subcontractors or agents. Neither Party shall be liable for incidental, special, consequential or punitive damages.

10. **INDEPENDENT CONTRACTOR:** Vendor shall act as an independent contractor and not an agent or employee of, or joint venture with the State. All payments by the State shall be made on that basis.

11. **SOLICITATION AND EMPLOYMENT:** Vendor shall not employ any person employed by the State during the term of this contract to perform any work under this contract. Vendor shall give notice immediately to the Agency's director if Vendor solicits or intends to solicit State employees to perform any work under this contract.

12. **COMPLIANCE WITH THE LAW:** The Vendor, its employees, agents, and subcontractors shall comply with all applicable federal, state, and local laws, rules, ordinances, regulations, orders, federal circulars and all license and permit requirements in the performance of this contract. Vendor shall be in compliance with applicable tax requirements and shall be current in payment of such taxes. Vendor shall obtain at its own expense, all licenses and permissions necessary for the performance of this contract.

13. **BACKGROUND CHECK:** Whenever the State deems it reasonably necessary for security reasons, the State may conduct, at its expense, criminal and driver history background checks of Vendor's and subcontractors officers, employees or agents. Vendor or subcontractor shall reassign immediately any such individual who, in the opinion of the State, does not pass the background check.

14. **APPLICABLE LAW:** This contract shall be construed in accordance with and is subject to the laws and rules of the State of Illinois. The Department of Human Rights' Equal Opportunity requirements (44 Ill. Adm. Code 750) are incorporated by reference. Any claim against the State arising out of this contract must be filed exclusively with the Illinois Court of Claims. 705 ILCS 505/1. The State shall not enter into binding arbitration to resolve any contract dispute. The State of Illinois does not waive sovereign immunity by entering into this contract. The official text of cited statutes is incorporated by reference. An unofficial version can be viewed at http://www.ilga.gov).

15. **ANTI-TRUST ASSIGNMENT:** If Vendor does not pursue any claim or cause of action it has arising under federal or state antitrust laws relating to the subject matter of the contract, then upon request of the Illinois Attorney General, Vendor shall assign to the State rights, title and interest in and to the claim or cause of action.

16. **CONTRACTUAL AUTHORITY:** The Agency that signs for the State of Illinois shall be the only State entity responsible for performance and payment under the contract. When the Chief Procurement Officer or authorized designee signs in addition to an Agency, they do so as approving officer and shall have no liability to Vendor. When the Chief Procurement Officer or authorized designee, or State Purchasing Officer signs a master contract on behalf of State agencies, only the Agency that places an order with the Vendor shall have any liability to Vendor for that order.

17. **NOTICES:** Notices and other communications provided for herein shall be given in writing by registered or certified mail, return receipt requested, by receipted hand delivery, by courier (UPS, Federal Express or other similar and

reliable carrier), by e-mail, or by fax showing the date and time of successful receipt. Notices shall be sent to the individuals who signed the contract using the contact information following the signatures. Each such notice shall be deemed to have been provided at the time it is actually received. By giving notice, either Party may change the contact information.

18. **MODIFICATIONS AND SURVIVAL:** Amendments, modifications and waivers must be in writing and signed by authorized representatives of the Parties. Any provision of this contract officially declared void, unenforceable, or against public policy, shall be ignored and the remaining provisions shall be interpreted, as far as possible, to give effect to the Parties' intent. All provisions that by their nature would be expected to survive, shall survive termination. In the event of a conflict between the State's and the Vendor's terms, conditions and attachments, the State's terms, conditions and attachments shall prevail.

19. **PERFORMANCE RECORD / SUSPENSION:** Upon request of the State, Vendor shall meet to discuss performance or provide contract performance updates to help ensure proper performance of the contract. The State may consider Vendor's performance under this contract and compliance with law and rule to determine whether to continue the contract, suspend Vendor from doing future business with the State for a specified period of time, or to determine whether Vendor can be considered responsible on specific future contract opportunities.

20. **FREEDOM OF INFORMATION ACT:** This contract and all related public records maintained by, provided to or required to be provided to the State are subject to the Illinois Freedom of Information Act (FOIA) (50 ILCS 140) notwithstanding any provision to the contrary that may be found in this contract.

21. **SCHEDULE OF WORK:** Any work performed on State premises shall be done during the hours designated by the State and performed in a manner that does not interfere with the State and its personnel.

22. **WARRANTIES FOR SUPPLIES AND SERVICES:**

    22.1 Vendor warrants that the supplies furnished under this contract will: (a) conform to the standards, specifications, drawing, samples or descriptions furnished by the State or furnished by the Vendor and agreed to by the State, including but not limited to all specifications attached as exhibits hereto; (b) be merchantable, of good quality and workmanship, and free from defects for a period of twelve months or longer if so specified in writing, and fit and sufficient for the intended use; (c) comply with all federal and state laws, regulations and ordinances pertaining to the manufacturing, packing, labeling, sale and delivery of the supplies; (d) be of good title and be free and clear of all liens and encumbrances and; (e) not infringe any patent, copyright or other intellectual property rights of any third party. Vendor agrees to reimburse the State for any losses, costs, damages or expenses, including without limitations, reasonable attorney's fees and expenses, arising from failure of the supplies to meet such warranties.

    22.2 Vendor shall insure that all manufacturers' warranties are transferred to the State and shall provide a copy of the warranty. These warranties shall be in addition to all other warranties, express, implied or statutory, and shall survive the State's payment, acceptance, inspection or failure to inspect the supplies.

    22.3 Vendor warrants that all services will be performed to meet the requirements of the contract in an efficient and effective manner by trained and competent personnel. Vendor shall monitor performances of each individual and shall reassign immediately any individual who is not performing in accordance with the contract, who is disruptive or not respectful of others in the workplace, or who in any way violates the contract or State policies.

23. **REPORTING, STATUS AND MONITORING SPECIFICATIONS:**

    23.1 Vendor shall immediately notify the State of any event that may have a material impact on Vendor's ability

to perform the contract.

23.2 By August 31 of each year, Vendor shall report to the Agency or University the number of qualified veterans and certain ex-offenders hired during Vendor's last completed fiscal year. Vendor may be entitled to employment tax credit for hiring individuals in those groups. 35 ILCS 5/216, 5/217.

24. **EMPLOYMENT TAX CREDIT:** Vendors who hire qualified veterans and certain ex-offenders may be eligible for tax credits. 30 ILCS 500/45-67 and 45-70. Please contact the Illinois Department of Revenue (telephone #: 217-524-4772) for information about tax credits.

25. **SUPPLEMENTAL PROVISIONS**

**25.1 TOLLWAY SUPPLEMENTAL PROVISIONS**

25.1.1 Agents and Employees:
Vendor shall be responsible for the negligent acts and omissions of its agents, employees and subcontractors in their performance of Vendor's duties under this Contract. Vendor represents that it shall utilize the services of individuals skilled in the profession for which they will be used in performing services or supplying goods hereunder. In the event that the Tollway determines that any individual performing services or supplying goods for Vendor hereunder is not providing such skilled services or delivery of goods, it shall promptly notify the Vendor and the Vendor shall replace that individual.

25.1.2 Publicity:
Vendor shall not, in any advertisement or any other type of solicitation for business, state, indicate or otherwise imply that it is under contract to the Tollway nor shall the Tollway's name be used in any such advertisement or solicitation without prior written approval except as required by law.

25.1.3 Third Party Beneficiaries:
There are no third party beneficiaries to this Contract. This Contract is intended only to benefit the Tollway/Buyer and the Vendor.

25.1.4 Successors in Interest:
All the terms, provisions, and conditions of the Contract shall be binding upon and inure to the benefit of the parties hereto and their respective successors, assigns and legal representatives.

25.1.5 Venue:
Any claim against the Tollway arising out of this contract must be filed exclusively with Circuit Court for the Eighteenth Judicial Circuit, DuPage County, Illinois for State claims and the U.S. District Court for the Northern District of Illinois for Federal claims.

25.1.5.1 Whenever "State" is used or referenced in this Contract, it shall be interpreted to mean "Tollway".

25.1.5.2 The State Prompt Payment Act (30 ILCS 40) does not apply to the Tollway.

25.1.5.3 The Tollway is not currently an appropriated agency.

25.2 REPORT OF A CHANGE IN CIRCUMSTANCES: The Contractor agrees to report to the TOLLWAY as soon as practically possible, but no later than 21 days following any change in facts or circumstances that might impact the CONTRACTOR's ability to satisfy its legal or contractual responsibilities and obligations under

this contract. Required reports include, but are not limited to changes in the CONTRACTOR's Certification/Disclosure Forms, the CONTRACTOR's IDOT pre-qualification, or any certification or licensing required for this project. Additionally, (CONTRACTOR/VENDOR) agrees to report to the Tollway within the above timeframe any arrests, indictments, convictions or other matters involving the CONTRACTOR, or any of its principals, that might occur while this contract is in effect. This reporting requirement does not apply to common offenses, including but not limited to minor traffic/vehicle offenses.

Further, the CONTRACTOR agrees to incorporate substantially similar reporting requirements into the terms of any and all subcontracts relating to work performed under this agreement. The (CONTRACTOR/VENDOR) agrees to forward or relay to the Tollway any reports received from subcontractors pursuant to this paragraph within 21 days.

Finally, the CONTRACTOR acknowledges and agrees that the failure of the CONTRACTOR to comply with this reporting requirement shall constitute a material breach of contract which may result in this contract being declared void.

**25.3 PAYMENT DATA REPORTING REQUIREMENT**

The Tollway requires contractors to report all payments received and/or paid to other firms pursuant to this contract in the form prescribed by the Tollway.

Additional information can be found at: https://www.illinoistollway.com/doing-business#B2GNow
(If hyperlink does not load, copy and paste the address into your web browser's address bar)

**25.4 VENDOR SUPPLEMENTAL PROVISIONS**

☐ Vendor Supplemental Provisions:

## STATE OF ILLINOIS

## SOLICITATION AND CONTRACT TERMS AND CONDITIONS EXCEPTIONS

Walsh Construction Company II LLC agrees with the terms and conditions set forth in the State of Illinois Invitation for Bid, including the standard terms and conditions, the Agency/University supplemental provisions, certifications, and disclosures, with the following exceptions:

| | |
|---|---|
| | Excluding certifications required by statute to be made by the Vendor, both Parties agree that all of the duties and obligations that the Vendor owes to the Agency/University for the work performed shall be pursuant to the solicitation and resulting contract, and Vendor's exceptions accepted by the State thereto as set forth below. |
| | **STANDARD TERMS AND CONDITIONS** |
| **Section/ Subsection #** | State the exception such as "add," "replace," and/or "delete." |
| | N/A |
| | |
| | |
| | |
| | |
| | |
| | **ADDITIONAL TERMS AND CONDITIONS** |
| **New Provision(s), # et. seq.** | **Section/Subsection New Number, Title of New Subsection:** State the new additional term or condition. |
| | N/A |
| | |
| | |
| | |
| | |

N/A hereby agrees to the exceptions provided by N/A and to the Additional Terms and Conditions provided by N/A.

| | |
|---|---|
| Agreed: [redacted] | Agreed: |
| By: Sean C Walsh [redacted] | By: |
| Signed: [redacted] | Signed: |
| Position: President | Position: |
| Date: 6/27/19 | Date: |

**Sub-Contractor/Consultant Information/Delinquent Debt Review**
**Contractor/Consultant**
**Sub-Contractor/Consultant**
**FEIN**

**Date:** 6/6/2019 **Project Number:** I-18-4428

**Project Name:** Bridge Reconstruction Burlington Nothern Santa Fe Railway (BNSF) Over the Tri-State Tollway (I-294)

DELINQUENT DEBT REVIEW

Sub-Contractor/Consultant Disclosure.
Will you be using any sub-consultants/contractors? ☒ Yes ☐ No

If yes, you must identify below, to the extent the information is known, regardless of the subcontract value, the names, addresses and type of work all Sub-Contractors/Consultants that will be utilized in the performance of this Contract, together with the anticipated dollar value (Sub-Contractors) or percentage (Sub-Consultants) each is expected to receive pursuant to this Contract. The list of sub-contractors/consultants should include but not be limited to sub-contractors/consultants, suppliers and truckers proposed to achieve disadvantaged business enterprise and veteran owned business goals. The State may request updated information at any time. For purposes of this section Sub-Contractors/Consultants are those specifically hired to perform part of the work of this contract. Non-DBE suppliers and truckers do not need to be included.

Upon request, our firm agrees to provide a copy of the subcontract, if required, within fifteen (15) days after execution of the contract if selected, or after execution of the subcontract, whichever is later, for those subcontracts with an annual value of more than $50,000. All subcontracts over $50,000 must include the same certifications that the Vendor must make as a condition of the contract. The vendor shall include in each subcontract the subcontractor certifications as shown on the Standard Subcontractor Certification form available from the State.

Delinquent Payment. The Contractor/Consultant certifies that it, or any affiliate, is not barred from being awarded a contract under 30 ILCS 500. Section 50-11 prohibits a person from entering into a contract with a State agency if it knows or should know that it, or any affiliate, is delinquent in the payment of any debt to the State as defined by the Debt Collection Board. Section 50-12 prohibits a person from entering into a contract with the State agency if it, or any affiliate, has failed to collect and remit Illinois Use Tax on all sales of tangible personal property into the State of Illinois in accordance with the provisions of the Illinois Use Tax Act. The Contractor/Consultant further acknowledges that the contracting State agency may declare the contract void if this certification is false or if the Contractor/Consultant or any affiliate is determined to be delinquent in the payment of any debt to the State during the term of the contract.

CONTRACTOR/ CONSULTANT

**Contractor/Consultant:** Walsh Construction Company II, LLC

**Federal Employment Identification Number (FEIN):** [redacted]

**E-Mail:**

**Include an attachment if more space is needed to provide the below information. The attachment must provide the requested information.**

**NOTE for Construction Contracts: List all known subcontractors including those identified in the Bid Package on DBE Form 2026 and VOSB Form 2026, and include any name listed in the "Under Contract To" section of these forms.**

| Sub-Contractor(s)/Consultant(s) | Sub-Contractor /Consultant FEIN | Address | General Type of Work | Anticipated Amount of Contract to be Paid (to extent known) Sub-Contractor (dollar value) or Sub-Consultant (percentage) |
|---|---|---|---|---|
| PLEASE SEE ATTACHED | | | | |
| | | | | |
| | | | | |
| | [redacted] | | | |

**Signature:** [redacted] **Date:** 6/6/2019

**Printed Name:** Sean G Walsh

TOLLWAY I-18-4428

| SUBCONTRACTOR(S) | SUBCONTRACTOR FEIN | ADDRESS | GENERAL TYPE OF WORK | ANTICIPATED AMOUNT TO BE PAID (TO EXTENT KNOWN) |
|---|---|---|---|---|
| VMR Contractors, Inc ✓ | | 16710 Richmond Ave., Ste. 5 Hazelcrest, IL 60429 | Rebar Installation | $ 511,750.78 |
| Alpine Demolition Services, LLC ✓ | | 3515 Stern Ave. St. Charles, IL 60174 | Demolition | $ 954,525.20 |
| La Grange Crane Service, Inc ✓ | | 6180 River Rd, Hodgkins, IL 60525 | Crane Rental | $ 74,570.00 |
| Divine Cement Inc ✓ | | 2551 Theodore St cresthill Il 60403 | PCC Paving Work | $ 313,589.68 |
| Bartech Group (ECC) ✓ | | 236 E. 161st Place, Unit C and D South Holland, IL 6047 | Electric Work | $ 649,500.00 |
| Everlights Inc (ECC) ✓ | | 1900 Greenwood Street, Unit B Evanston, IL 60201 | Electric Work | $ 62,638.66 |
| City Lights (ECC) ✓ | | 9993 Virginia Avenue Chicago Ridge, IL 60415-0000 | Electric Work | $ 210,155.40 |
| Industrial Fence Inc ✓ | | 1300 S. Kilbourn Ave Chicago, IL 60623 | Fence & Guardrail | $ 1,149,079.60 |
| Maintenance Coatings Co (TSI) ✓ | | 543 Wood Bury St South Elgin Il 60177 | affic Control & Pavement Mark | $ 144,590.80 |
| Sanco Inc (TSI) ✓ | | 200 Quaker Rd Rockford Il 61104 | Traffic Control Work | $ 99,767.85 |
| Natural Creations Landscaping, Inc ✓ | | 356 Bruce St Joliet Il 60432 | Landscaping Work | $ 564,044.41 |
| Lotus Options, Inc ✓ | | 2 Paxos Drive Palos Hills, IL 60465 | Painting | $ 341,896.20 |
| CR Schmidt, Inc ✓ | | 35215 Talbot Avenue Warrenville, IL 60555 | Furnish/Install Block Wall | $ 164,304.00 |
| Pine Waterproofing & Sealant, Inc ✓ | | 10209 Pacific Ave Franklin Park, IL 60131 | Furnish/Install Waterproofing | $ 460,073.00 |
| * Jamart Ent Inc | | 7519 Banks St , Justice IL 60458 | Misc Trucking | $ 200,000.00 |
| RA Seaton Contractor Services, LLC ✓ | | 5100 Linden Rd. Rockford, IL 61109 | Misc Trucking | $ 179,868.71 |
| [redacted] | | [redacted] | [redacted] | $ [redacted] SW |
| DCH Construction & Hauling LLC ✓ | | 9454 Schiller Blvd. Franklin Park, IL 60131 | Misc Trucking | $ 375,000.00 SW |
| * J Ave Development, Inc | | 12300 New Ave Lemont, IL 60439 | Misc Trucking | $ 337,798.00 |

| | | | | |
|---|---|---|---|---|
| Archon Construction Co Inc ✓ | | 563 S Route 53, Addison, IL 60101 | Drainage & Water Main | $ 2,557,190.78 |
| Area Equipment, Inc ✓ | | 150 E Hill St, Villa Park, IL 60181 | Beam Erection | $3,202,411.40 |
| | | | | |
| | | | | |
| | | | | |

**Substance Abuse Prevention Program Certification Public Act 95-0635**

Contract # I-18-4428 Today's Date 6/6/2019

The undersigned Contractor(s) and Subcontractor(s) certify that they have read the provisions of the Substance Abuse Prevention on Public Works Act, Public Act 95-0635, and are in compliance with the terms of the Act.

____The Contractor/Subcontractors hereby certify that they are exempt from the provisions of Public Act 95-0635 because it is a party to a collective bargaining agreement that deals with Substance Abuse and Prevention as provided for in the Act.

x___The Contractor/Subcontractors hereby certify they have a program in place to address Substance Abuse and Prevention as provided for in the Act and will submit the same to the Illinois Tollway prior to issuance of an Authorization to Proceed.

Walsh Construction Company II, LLC — President [redacted]

Contractor — Name/Title [redacted] Representative

[redacted] of Authorized Representative

Subcontractor — Name/Title of Authorized Representative

Signature of Authorized Representative

Subcontractor — Name/Title of Authorized Representative

Signature of Authorized Representative

Subcontractor — Name/Title of Authorized Representative

Signature of Authorized Representative

Subcontractor — Name/Title of Authorized Representative

Signature of Authorized Representative

OFFICE OF THE ILLINOIS SECRETARY OF STATE

JESSE WHITE
SECRETARY OF STATE

## LLC FILE DETAIL REPORT

| | | | |
|---|---|---|---|
| **File Number** | 02861879 | | |
| **Entity Name** | WALSH CONSTRUCTION COMPANY II, LLC | | |
| **Status** | ACTIVE | **On** | 07/03/2019 |
| **Entity Type** | LLC | **Type of LLC** | Domestic |
| **File Date** | 09/03/2009 | **Jurisdiction** | IL |
| **Agent Name** | PETER GLIMCO | **Agent Change Date** | 05/05/2010 |
| **Agent Street Address** | 929 W ADAMS ST | **Principal Office** | 929 W ADAMS ST<br>CHICAGO, IL 60607 |
| **Agent City** | CHICAGO | **Managers** | View |
| **Agent Zip** | 60607 | **Duration** | |
| **Annual Report Filing Date** | 07/03/2019 | **For Year** | 2019 |
| **Series Name** | NOT AUTHORIZED TO ESTABLISH SERIES | | |

Return to the Search Screen

Purchase Certificate of Good Standin
**(One Certificate per Transacti**

### OTHER SERVICES

File Annual Report

Adopting Assumed Name

Articles of Amendment Effecting A Name Change

Change of Registered Agent and/or Registered Office Address

BACK TO CYBERDRIVEILLINOIS.COM HOME PAGE

Walsh

OCIS CICIOCP1 OFFSET CONTRACT INQUIRY 13:00 **07/08/19**

ACTION: S

OFFSET: 00 OF 00

VENDOR NUMBER= [redacted]
VENDOR NAME: *
CLAIMING AGENCY NUMBER: *
CLAIMING AGENCY NAME: *
CLAIMING AGENCY PHONE NUMBER: *

DISCLAIMER:
AS OF 07/08/19 AT 13:00 OUR INVOLUNTARY WITHHOLDING SYSTEM DOES NOT HAVE AN ACTIVE CLAIM AGAINST VENDOR NUMBER [redacted]. PLEASE BE ADVISED THAT OUR SYSTEM ONLY CONTAINS CLAIMS FILED BY STATE AGENCIES PURSUANT TO 15 ILCS 405/ 10.05. A VENDOR MAY BE DELIQUENT IN A DEBT TO THE STATE OF ILLINOIS, BUT THE DEBT MAY NOT BE RECORDED ON OUR INVOLUNTARY WITHHOLDING SYSTEM.

*

ENTER=PROCESS, PF3=IOCM, PF12=REFRESH

VMR

OCIS CICIOCP1 OFFSET CONTRACT INQUIRY 13:00 **07/08/19**

ACTION: S

VENDOR NUMBER= [redacted] OFFSET: 00 OF 00
VENDOR NAME: *
CLAIMING AGENCY NUMBER: *
CLAIMING AGENCY NAME: *
CLAIMING AGENCY PHONE NUMBER: *

DISCLAIMER:
AS OF 07/08/19 AT 13:02 OUR INVOLUNTARY WITHHOLDING SYSTEM DOES NOT HAVE AN ACTIVE CLAIM AGAINST VENDOR NUMBER [redacted] PLEASE BE ADVISED THAT OUR SYSTEM ONLY CONTAINS CLAIMS FILED BY STATE AGENCIES PURSUANT TO 15 ILCS 405/ 10.05. A VENDOR MAY BE DELIQUENT IN A DEBT TO THE STATE OF ILLINOIS, BUT THE DEBT MAY NOT BE RECORDED ON OUR INVOLUNTARY WITHHOLDING SYSTEM.

*

ENTER=PROCESS, PF3=IOCM, PF12=REFRESH

Alpine

OCIS CICIOCP1 OFFSET CONTRACT INQUIRY 13:00 **07/08/19**

ACTION: S

OFFSET: 00 OF 00

VENDOR NUMBER= [redacted]
VENDOR NAME: *
CLAIMING AGENCY NUMBER: *
CLAIMING AGENCY NAME: *
CLAIMING AGENCY PHONE NUMBER: *

DISCLAIMER:
AS OF 07/08/19 AT 13:03 OUR INVOLUNTARY WITHHOLDING SYSTEM DOES NOT HAVE AN ACTIVE CLAIM AGAINST VENDOR NUMBER [redacted]. PLEASE BE ADVISED THAT OUR SYSTEM ONLY CONTAINS CLAIMS FILED BY STATE AGENCIES PURSUANT TO 15 ILCS 405/ 10.05. A VENDOR MAY BE DELIQUENT IN A DEBT TO THE STATE OF ILLINOIS, BUT THE DEBT MAY NOT BE RECORDED ON OUR INVOLUNTARY WITHHOLDING SYSTEM.

*

ENTER=PROCESS, PF3=IOCM, PF12=REFRESH

La Grange

OCIS CICIOCP1 OFFSET CONTRACT INQUIRY 13:00 **07/08/19**

ACTION: S

OFFSET: 00 OF 00

VENDOR NUMBER= [redacted]
VENDOR NAME: *
CLAIMING AGENCY NUMBER: *
CLAIMING AGENCY NAME: *
CLAIMING AGENCY PHONE NUMBER: *

DISCLAIMER:
AS OF 07/08/19 AT 13:05 OUR INVOLUNTARY WITHHOLDING SYSTEM DOES NOT HAVE AN ACTIVE CLAIM AGAINST VENDOR NUMBER [redacted]. PLEASE BE ADVISED THAT OUR SYSTEM ONLY CONTAINS CLAIMS FILED BY STATE AGENCIES PURSUANT TO 15 ILCS 405/ 10.05. A VENDOR MAY BE DELIQUENT IN A DEBT TO THE STATE OF ILLINOIS, BUT THE DEBT MAY NOT BE RECORDED ON OUR INVOLUNTARY WITHHOLDING SYSTEM.

*

ENTER=PROCESS, PF3=IOCM, PF12=REFRESH

Divine

OCIS CICIOCP1 OFFSET CONTRACT INQUIRY 13:00 **07/08/19**

ACTION: S

OFFSET: 00 OF 00

VENDOR NUMBER= [redacted]
VENDOR NAME: *
CLAIMING AGENCY NUMBER: *
CLAIMING AGENCY NAME: *
CLAIMING AGENCY PHONE NUMBER: *

DISCLAIMER:
AS OF 07/08/19 AT 13:03 OUR INVOLUNTARY WITHHOLDING SYSTEM DOES NOT HAVE AN ACTIVE CLAIM AGAINST VENDOR NUMBER [redacted]. PLEASE BE ADVISED THAT OUR SYSTEM ONLY CONTAINS CLAIMS FILED BY STATE AGENCIES PURSUANT TO 15 ILCS 405/ 10.05. A VENDOR MAY BE DELIQUENT IN A DEBT TO THE STATE OF ILLINOIS, BUT THE DEBT MAY NOT BE RECORDED ON OUR INVOLUNTARY WITHHOLDING SYSTEM.

*

ENTER=PROCESS, PF3=IOCM, PF12=REFRESH

Electric Conduit

OCIS CICIOCP1 OFFSET CONTRACT INQUIRY 13:00 **07/08/19**

ACTION: S

VENDOR NUMBER= [redacted] OFFSET: 00 OF 00
VENDOR NAME: *
CLAIMING AGENCY NUMBER: *
CLAIMING AGENCY NAME: *
CLAIMING AGENCY PHONE NUMBER: *

DISCLAIMER:
AS OF 07/08/19 AT 13:01 OUR INVOLUNTARY WITHHOLDING SYSTEM DOES NOT HAVE AN ACTIVE CLAIM AGAINST VENDOR NUMBER [redacted] PLEASE BE ADVISED THAT OUR SYSTEM ONLY CONTAINS CLAIMS FILED BY STATE AGENCIES PURSUANT TO 15 ILCS 405/ 10.05. A VENDOR MAY BE DELIQUENT IN A DEBT TO THE STATE OF ILLINOIS, BUT THE DEBT MAY NOT BE RECORDED ON OUR INVOLUNTARY WITHHOLDING SYSTEM.

*

ENTER=PROCESS, PF3=IOCM, PF12=REFRESH

Bartech

OCIS CICIOCP1 OFFSET CONTRACT INQUIRY 13:00 **07/08/19**

ACTION: S

VENDOR NUMBER= [redacted] OFFSET: 00 OF 00
VENDOR NAME: *
CLAIMING AGENCY NUMBER: *
CLAIMING AGENCY NAME: *
CLAIMING AGENCY PHONE NUMBER: *

DISCLAIMER:
AS OF 07/08/19 AT 13:04 OUR INVOLUNTARY WITHHOLDING SYSTEM DOES NOT HAVE AN ACTIVE CLAIM AGAINST VENDOR NUMBER [redacted]. PLEASE BE ADVISED THAT OUR SYSTEM ONLY CONTAINS CLAIMS FILED BY STATE AGENCIES PURSUANT TO 15 ILCS 405/ 10.05. A VENDOR MAY BE DELIQUENT IN A DEBT TO THE STATE OF ILLINOIS, BUT THE DEBT MAY NOT BE RECORDED ON OUR INVOLUNTARY WITHHOLDING SYSTEM.

*

ENTER=PROCESS, PF3=IOCM, PF12=REFRESH

Everlights

OCIS CICIOCP1 OFFSET CONTRACT INQUIRY 13:00 **07/08/19**

ACTION: S

OFFSET: 00 OF 00

VENDOR NUMBER= [redacted]
VENDOR NAME: *
CLAIMING AGENCY NUMBER: *
CLAIMING AGENCY NAME: *
CLAIMING AGENCY PHONE NUMBER: *

DISCLAIMER:
AS OF 07/08/19 AT 13:05 OUR INVOLUNTARY WITHHOLDING SYSTEM DOES NOT HAVE AN ACTIVE CLAIM AGAINST VENDOR NUMBER [redacted] PLEASE BE ADVISED THAT OUR SYSTEM ONLY CONTAINS CLAIMS FILED BY STATE AGENCIES PURSUANT TO 15 ILCS 405/ 10.05. A VENDOR MAY BE DELIQUENT IN A DEBT TO THE STATE OF ILLINOIS, BUT THE DEBT MAY NOT BE RECORDED ON OUR INVOLUNTARY WITHHOLDING SYSTEM.

*

ENTER=PROCESS, PF3=IOCM, PF12=REFRESH

City Lights

OCIS CICIOCP1 OFFSET CONTRACT INQUIRY 13:00 **07/08/19**

ACTION: S

VENDOR NUMBER= [redacted] OFFSET: 00 OF 00
VENDOR NAME: *
CLAIMING AGENCY NUMBER: *
CLAIMING AGENCY NAME: *
CLAIMING AGENCY PHONE NUMBER: *

DISCLAIMER:
AS OF 07/08/19 AT 13:05 OUR INVOLUNTARY WITHHOLDING SYSTEM DOES NOT HAVE AN ACTIVE CLAIM AGAINST VENDOR NUMBER [redacted]. PLEASE BE ADVISED THAT OUR SYSTEM ONLY CONTAINS CLAIMS FILED BY STATE AGENCIES PURSUANT TO 15 ILCS 405/ 10.05. A VENDOR MAY BE DELIQUENT IN A DEBT TO THE STATE OF ILLINOIS, BUT THE DEBT MAY NOT BE RECORDED ON OUR INVOLUNTARY WITHHOLDING SYSTEM.

*

ENTER=PROCESS, PF3=IOCM, PF12=REFRESH

Industrial Fence

OCIS CICIOCP1 OFFSET CONTRACT INQUIRY 13:00 07/08/19

ACTION: S

OFFSET: 00 OF 00

VENDOR NUMBER= [redacted]
VENDOR NAME: *
CLAIMING AGENCY NUMBER: *
CLAIMING AGENCY NAME: *
CLAIMING AGENCY PHONE NUMBER: *

DISCLAIMER:
AS OF 07/08/19 AT 13:25 OUR INVOLUNTARY WITHHOLDING SYSTEM DOES NOT HAVE AN ACTIVE CLAIM AGAINST VENDOR NUMBER [redacted]. PLEASE BE ADVISED THAT OUR SYSTEM ONLY CONTAINS CLAIMS FILED BY STATE AGENCIES PURSUANT TO 15 ILCS 405/ 10.05. A VENDOR MAY BE DELIQUENT IN A DEBT TO THE STATE OF ILLINOIS, BUT THE DEBT MAY NOT BE RECORDED ON OUR INVOLUNTARY WITHHOLDING SYSTEM.

*

ENTER=PROCESS, PF3=IOCM, PF12=REFRESH

Traffic

OCIS CICIOCP1 OFFSET CONTRACT INQUIRY 13:00 **07/08/19**

ACTION: S

OFFSET: 00 OF 00

VENDOR NUMBER= [redacted]
VENDOR NAME: *
CLAIMING AGENCY NUMBER: *
CLAIMING AGENCY NAME: *
CLAIMING AGENCY PHONE NUMBER: *

DISCLAIMER:
AS OF 07/08/19 AT 13:02 OUR INVOLUNTARY WITHHOLDING SYSTEM DOES NOT HAVE AN ACTIVE CLAIM AGAINST VENDOR NUMBER [redacted]. PLEASE BE ADVISED THAT OUR SYSTEM ONLY CONTAINS CLAIMS FILED BY STATE AGENCIES PURSUANT TO 15 ILCS 405/ 10.05. A VENDOR MAY BE DELIQUENT IN A DEBT TO THE STATE OF ILLINOIS, BUT THE DEBT MAY NOT BE RECORDED ON OUR INVOLUNTARY WITHHOLDING SYSTEM.

*

ENTER=PROCESS, PF3=IOCM, PF12=REFRESH

Maintenance

OCIS CICIOCP1 OFFSET CONTRACT INQUIRY 13:00 **07/08/19**

ACTION: S

VENDOR NUMBER= [redacted] OFFSET: 00 OF 00
VENDOR NAME: *
CLAIMING AGENCY NUMBER: *
CLAIMING AGENCY NAME: *
CLAIMING AGENCY PHONE NUMBER: *

DISCLAIMER:
AS OF 07/08/19 AT 13:06 OUR INVOLUNTARY WITHHOLDING SYSTEM DOES NOT HAVE AN ACTIVE CLAIM AGAINST VENDOR NUMBER [redacted]. PLEASE BE ADVISED THAT OUR SYSTEM ONLY CONTAINS CLAIMS FILED BY STATE AGENCIES PURSUANT TO 15 ILCS 405/ 10.05. A VENDOR MAY BE DELIQUENT IN A DEBT TO THE STATE OF ILLINOIS, BUT THE DEBT MAY NOT BE RECORDED ON OUR INVOLUNTARY WITHHOLDING SYSTEM.

*

ENTER=PROCESS, PF3=IOCM, PF12=REFRESH

Sance

OCIS CICIOCP1 OFFSET CONTRACT INQUIRY 13:00 **07/08/19**

ACTION: S

VENDOR NUMBER= [redacted] OFFSET: 00 OF 00
VENDOR NAME: *
CLAIMING AGENCY NUMBER: *
CLAIMING AGENCY NAME: *
CLAIMING AGENCY PHONE NUMBER: *

DISCLAIMER:
AS OF 07/08/19 AT 13:23 OUR INVOLUNTARY WITHHOLDING SYSTEM DOES NOT HAVE AN ACTIVE CLAIM AGAINST VENDOR NUMBER [redacted] PLEASE BE ADVISED THAT OUR SYSTEM ONLY CONTAINS CLAIMS FILED BY STATE AGENCIES PURSUANT TO 15 ILCS 405/ 10.05. A VENDOR MAY BE DELIQUENT IN A DEBT TO THE STATE OF ILLINOIS, BUT THE DEBT MAY NOT BE RECORDED ON OUR INVOLUNTARY WITHHOLDING SYSTEM.

*

ENTER=PROCESS, PF3=IOCM, PF12=REFRESH

Natural

OCIS CICIOCP1 OFFSET CONTRACT INQUIRY 13:00 **07/08/19**

ACTION: S

OFFSET: 00 OF 00

VENDOR NUMBER= [redacted]
VENDOR NAME: *
CLAIMING AGENCY NUMBER: *
CLAIMING AGENCY NAME: *
CLAIMING AGENCY PHONE NUMBER: *

DISCLAIMER:
AS OF 07/08/19 AT 13:06 OUR INVOLUNTARY WITHHOLDING SYSTEM DOES NOT HAVE AN ACTIVE CLAIM AGAINST VENDOR NUMBER [redacted]. PLEASE BE ADVISED THAT OUR SYSTEM ONLY CONTAINS CLAIMS FILED BY STATE AGENCIES PURSUANT TO 15 ILCS 405/ 10.05. A VENDOR MAY BE DELIQUENT IN A DEBT TO THE STATE OF ILLINOIS, BUT THE DEBT MAY NOT BE RECORDED ON OUR INVOLUNTARY WITHHOLDING SYSTEM.

*

ENTER=PROCESS, PF3=IOCM, PF12=REFRESH

Lotus

OCIS CICIOCP1 OFFSET CONTRACT INQUIRY 13:00 **07/08/19**

ACTION: S

VENDOR NUMBER= [redacted] OFFSET: 00 OF 00
VENDOR NAME: *
CLAIMING AGENCY NUMBER: *
CLAIMING AGENCY NAME: *
CLAIMING AGENCY PHONE NUMBER: *

DISCLAIMER:
AS OF 07/08/19 AT 13:07 OUR INVOLUNTARY WITHHOLDING SYSTEM DOES NOT HAVE AN ACTIVE CLAIM AGAINST VENDOR NUMBER [redacted] PLEASE BE ADVISED THAT OUR SYSTEM ONLY CONTAINS CLAIMS FILED BY STATE AGENCIES PURSUANT TO 15 ILCS 405/ 10.05. A VENDOR MAY BE DELIQUENT IN A DEBT TO THE STATE OF ILLINOIS, BUT THE DEBT MAY NOT BE RECORDED ON OUR INVOLUNTARY WITHHOLDING SYSTEM.

*

ENTER=PROCESS, PF3=IOCM, PF12=REFRESH

CR Schmidt

OCIS CICIOCP1 OFFSET CONTRACT INQUIRY 13:00 **07/08/19**

ACTION: S

VENDOR NUMBER= [redacted] OFFSET: 00 OF 00
VENDOR NAME: *
CLAIMING AGENCY NUMBER: *
CLAIMING AGENCY NAME: *
CLAIMING AGENCY PHONE NUMBER: *

DISCLAIMER:
AS OF 07/08/19 AT 13:07 OUR INVOLUNTARY WITHHOLDING SYSTEM DOES NOT HAVE AN ACTIVE CLAIM AGAINST VENDOR NUMBER [redacted] PLEASE BE ADVISED THAT OUR SYSTEM ONLY CONTAINS CLAIMS FILED BY STATE AGENCIES PURSUANT TO 15 ILCS 405/ 10.05. A VENDOR MAY BE DELIQUENT IN A DEBT TO THE STATE OF ILLINOIS, BUT THE DEBT MAY NOT BE RECORDED ON OUR INVOLUNTARY WITHHOLDING SYSTEM.

*

ENTER=PROCESS, PF3=IOCM, PF12=REFRESH

Pine

OCIS CICIOCP1 OFFSET CONTRACT INQUIRY 13:00 **07/08/19**

ACTION: S

VENDOR NUMBER= [redacted] OFFSET: 00 OF 00
VENDOR NAME: *
CLAIMING AGENCY NUMBER: *
CLAIMING AGENCY NAME: *
CLAIMING AGENCY PHONE NUMBER: *

DISCLAIMER:
AS OF 07/08/19 AT 13:22 OUR INVOLUNTARY WITHHOLDING SYSTEM DOES NOT HAVE AN ACTIVE CLAIM AGAINST VENDOR NUMBER [redacted]. PLEASE BE ADVISED THAT OUR SYSTEM ONLY CONTAINS CLAIMS FILED BY STATE AGENCIES PURSUANT TO 15 ILCS 405/ 10.05. A VENDOR MAY BE DELIQUENT IN A DEBT TO THE STATE OF ILLINOIS, BUT THE DEBT MAY NOT BE RECORDED ON OUR INVOLUNTARY WITHHOLDING SYSTEM.

*

ENTER=PROCESS, PF3=IOCM, PF12=REFRESH

August 6, 2019

WALSH Ltr. 219091-001

Mr. Mike Wicks
Illinois Tollway
2700 Ogden Ave
Downers Grove, IL 60515

Attn: Demico Cole, P.E.
Resident Engineer - TranSystems

Re: **Subcontractor Delinquent Debt**
Contract I-18-4428, Cook/DuPage County
Bridge Construction - BNSF Railway over I-294
Walsh Project No. 219091

Dear Mr. Cole,

Walsh Construction Company II, LLC (Walsh) is in receipt of the Illinois Tollway's (Tollway) email correspondence received July 9, 2019 titled "Delinquent Debt". Based on receipt, Walsh took immediate action to rectify all open debts associated with our planned subcontractor's.

Since this initial notification from the Tollway, Walsh has actively worked to get a final resolution from Jamart Enterprises, one of our planned DBE trucking subcontractors, on resolving their open debt with the State of Illinois. Jamart has been working diligently with the Illinois Department of Revenue to clear this debt, but a quick resolution to this matter seems unlikely.

In order to avoid delay to the start of this project and allow for the issuance of a Notice to Proceed, Walsh is willing to assume financial responsibility for the current delinquent debt received in the notification as of July 9, 2019. We will continue to work with Jamart Enterprises to properly clear this issue with the state and will not allow Jamart to perform any work on this project until a time that is has been cleared of this issue by the state. As you are aware, prior to the commencement of work on the Project by any subcontractors, an A-15 must be submitted and approved. Please accept this additional assurance that no delinquent subcontractors will perform work on the Project.

Alternatively, Jamart has offered that they be removed from the Project to allow for the timely commencement of work. While this is an option available, Walsh would prefer a conditional notice to proceed in order to allow Jamart additional time to resolve this delinquent debt. Walsh does not anticipate work by Jamart on the Project for several months, or potentially 2020.

Please do not hesitate to contact me with any questions or concerns.

Sincerely,
Walsh Construction Company II, LLC

[redacted]

Brian Fidoruk

929 West Adams Street, Chicago Illinois 60607
P 312 563 5400 F 312 563 5467 www.walshgroup.com
An Equal Opportunity Employer

Project Manager

cc: P. Griffith
Field File 1.1a

JAMART

OCIS CICIOCP1 OFFSET CONTRACT INQUIRY 13:00 **07/08/19**

ACTION: S

VENDOR NUMBER= [redacted] OFFSET: 01 OF 01
VENDOR NAME: JAMART ENTERPRISES INC
CLAIMING AGENCY NUMBER: 492
CLAIMING AGENCY NAME: DEPT OF REVENUE
CLAIMING AGENCY PHONE NUMBER: 217/785-3731

[redacted]

DISCLAIMER:
AS OF 07/08/19 AT 13:22 OUR INVOLUNTARY WITHHOLDING SYSTEM DOES HAVE AN ACTIVE CLAIM AGAINST VENDOR NUMBER [redacted]. AN ACTIVE CLAIM MEANS A CLAIM THAT HAS NOT BEEN FULLY SETTLED BY PAYMENT TO THE CLAIMING AGENCY. AN ACTIVE CLAIM COULD BE SUBJECT TO A PENDING ADMINISTRATIVE OR JUDICIAL PROTEST, PAYMENTS IN PROCESS, OR A WRITTEN PAYMENT AGREEMENT WITH THE CLAIMING AGENCY. PLEASE CONTACT THE CLAIMING AGENCY THAT IS IDENTIFIED ON THIS SCREEN, AND/OR THE VENDOR FOR FURTHER DETAILS ON THIS CLAIM.

ENTER=PROCESS, PF3=IOCM, PF12=REFRESH

Removed

RA Seaton

OCIS CICIOCP1 OFFSET CONTRACT INQUIRY 13:00 **07/08/19**

ACTION: S

VENDOR NUMBER= [redacted] OFFSET: 00 OF 00
VENDOR NAME: *
CLAIMING AGENCY NUMBER: *
CLAIMING AGENCY NAME: *
CLAIMING AGENCY PHONE NUMBER: *

DISCLAIMER:
AS OF 07/08/19 AT 13:22 OUR INVOLUNTARY WITHHOLDING SYSTEM DOES NOT HAVE AN ACTIVE CLAIM AGAINST VENDOR NUMBER [redacted] PLEASE BE ADVISED THAT OUR SYSTEM ONLY CONTAINS CLAIMS FILED BY STATE AGENCIES PURSUANT TO 15 ILCS 405/ 10.05. A VENDOR MAY BE DELIQUENT IN A DEBT TO THE STATE OF ILLINOIS, BUT THE DEBT MAY NOT BE RECORDED ON OUR INVOLUNTARY WITHHOLDING SYSTEM.

*

ENTER=PROCESS, PF3=IOCM, PF12=REFRESH

DCH

OCIS CICIOCP1 OFFSET CONTRACT INQUIRY 13:00 **07/08/19**

ACTION: S

VENDOR NUMBER= [redacted] OFFSET: 00 OF 00
VENDOR NAME: *
CLAIMING AGENCY NUMBER: *
CLAIMING AGENCY NAME: *
CLAIMING AGENCY PHONE NUMBER: *

DISCLAIMER:
AS OF 07/08/19 AT 13:24 OUR INVOLUNTARY WITHHOLDING SYSTEM DOES NOT HAVE AN ACTIVE CLAIM AGAINST VENDOR NUMBER [redacted] PLEASE BE ADVISED THAT OUR SYSTEM ONLY CONTAINS CLAIMS FILED BY STATE AGENCIES PURSUANT TO 15 ILCS 405/ 10.05. A VENDOR MAY BE DELIQUENT IN A DEBT TO THE STATE OF ILLINOIS, BUT THE DEBT MAY NOT BE RECORDED ON OUR INVOLUNTARY WITHHOLDING SYSTEM.

*

ENTER=PROCESS, PF3=IOCM, PF12=REFRESH

## Rivers, Charissa

**From:** Tompkins, Kathleen <Kathleen.Tompkins@Illinois.Gov>
**Sent:** Wednesday, July 17, 2019 10:13 AM
**To:** Rivers, Charissa
**Subject:** 4743912 J Ave Development Inc.

Good morning Chrissy. The employer above is in compliance with our Agency and therefore should be considered eligible for state contract. Thanks for your inquiry.

Kathy Tompkins
Manager of Collection Enforcement
Illinois Department of Employment Security
33 S. State Street, 10th Floor
Chicago, IL 60603
(312) 793-2505 phone
(312) 793-2361 fax

IDES
ILLINOIS DEPARTMENT OF EMPLOYMENT SECURITY

**From:** Rivers, Charissa <crivers@getipass.com>
**Sent:** Wednesday, July 17, 2019 9:54 AM
**To:** Tompkins, Kathleen <Kathleen.Tompkins@Illinois.Gov>
**Subject:** [External] Delinquent Debt
**Importance:** High

Good Morning Kathleen,

A subcontractor J Ave (FEIN: [redacted]) has delinquent debt with the State (see attached). They sent me a notification that this debt was paid months ago (also attached). Can you please confirm?

Please let me know if you need any additional information.

Thank you!

**Chrissy Rivers**
Illinois Tollway – PMO
2700 Ogden Avenue
Downers Grove, IL 60515
(630) 241-6800 x4962
crivers@getipass.com

E-MAIL CONFIDENTIALITY NOTICE: This electronic mail message, including any attachments, is for the intended recipient(s) only. This e-mail and any attachments might contain information that is confidential, legally privileged or otherwise protected or exempt from disclosure under applicable law. If you are not a named recipient, or if you are named but believe that you received this e-mail in error, please notify the sender immediately by telephone or return e-mail and promptly delete this e-mail and any attachments and copies thereof from your system. If you are not the intended recipient, please be aware that any copying, distribution, dissemination, disclosure or other use of this e-mail and any attachments is unauthorized and prohibited. Your receipt of this

## Rivers, Charissa

**From:** Gomez, Graciela
**Sent:** Tuesday, July 23, 2019 8:22 AM
**To:** Rivers, Charissa
**Subject:** J Ave Development Inc. - FEIN [redacted]

```
OCIS  CICIOCP1              OFFSET CONTRACT INQUIRY            08:20 07/23/19

ACTION: S

               VENDOR NUMBER= [redacted]                        OFFSET: 00 OF 00
                 VENDOR NAME: *
      CLAIMING AGENCY NUMBER: *
        CLAIMING AGENCY NAME: *
CLAIMING AGENCY PHONE NUMBER: *

DISCLAIMER:
AS OF 07/23/19 AT 08:20 OUR INVOLUNTARY WITHHOLDING SYSTEM DOES NOT HAVE AN
ACTIVE CLAIM AGAINST VENDOR NUMBER [redacted] PLEASE BE ADVISED THAT OUR
SYSTEM ONLY CONTAINS CLAIMS FILED BY STATE AGENCIES PURSUANT TO 15 ILCS 405/
10.05. A VENDOR MAY BE DELIQUENT IN A DEBT TO THE STATE OF ILLINOIS, BUT THE
DEBT MAY NOT BE RECORDED ON OUR INVOLUNTARY WITHHOLDING SYSTEM.

*



ENTER=PROCESS,  PF3=IOCM,  PF12=REFRESH
```

E-MAIL CONFIDENTIALITY NOTICE: This electronic mail message, including any attachments, is for the intended recipient(s) only. This e-mail and any attachments might contain information that is confidential, legally privileged or otherwise protected or exempt from disclosure under applicable law. If you are not a named recipient, or if you are named but believe that you received this e-mail in error, please notify the sender immediately by telephone or return e-mail and promptly delete this e-mail and any attachments and copies thereof from your system. If you are not the intended recipient, please be aware that any copying, distribution, dissemination, disclosure or other use of this e-mail and any attachments is unauthorized and prohibited. Your receipt of this message is not intended to waive any applicable privilege or claim of confidentiality, and any prohibited or unauthorized disclosure is not binding on the Illinois State Toll Highway Authority. Thank you for your cooperation.

J AVE

OCIS CICIOCP1 OFFSET CONTRACT INQUIRY 13:00 **07/08/19**

ACTION: S

VENDOR NUMBER= [redacted] OFFSET: 01 OF 01
VENDOR NAME: J AVE DEVELOPMENT INC
CLAIMING AGENCY NUMBER: 427
CLAIMING AGENCY NAME: EMPLOYMENT SECURITY DEPT OF
CLAIMING AGENCY PHONE NUMBER: 312/793-8333

* Please see email *

DISCLAIMER:
AS OF 07/08/19 AT 13:24 OUR INVOLUNTARY WITHHOLDING SYSTEM DOES HAVE AN ACTIVE CLAIM AGAINST VENDOR NUMBER [redacted]. AN ACTIVE CLAIM MEANS A CLAIM THAT HAS NOT BEEN FULLY SETTLED BY PAYMENT TO THE CLAIMING AGENCY. AN ACTIVE CLAIM COULD BE SUBJECT TO A PENDING ADMINISTRATIVE OR JUDICIAL PROTEST, PAYMENTS IN PROCESS, OR A WRITTEN PAYMENT AGREEMENT WITH THE CLAIMING AGENCY. PLEASE CONTACT THE CLAIMING AGENCY THAT IS IDENTIFIED ON THIS SCREEN, AND/OR THE VENDOR FOR FURTHER DETAILS ON THIS CLAIM.

ENTER=PROCESS, PF3=IOCM, PF12=REFRESH

Archon

OCIS CICIOCP1 OFFSET CONTRACT INQUIRY 13:00 **07/08/19**

ACTION: S

VENDOR NUMBER= [redacted] OFFSET: 00 OF 00
VENDOR NAME: *
CLAIMING AGENCY NUMBER: *
CLAIMING AGENCY NAME: *
CLAIMING AGENCY PHONE NUMBER: *

DISCLAIMER:
AS OF 07/08/19 AT 13:04 OUR INVOLUNTARY WITHHOLDING SYSTEM DOES NOT HAVE AN ACTIVE CLAIM AGAINST VENDOR NUMBER [redacted] PLEASE BE ADVISED THAT OUR SYSTEM ONLY CONTAINS CLAIMS FILED BY STATE AGENCIES PURSUANT TO 15 ILCS 405/ 10.05. A VENDOR MAY BE DELIQUENT IN A DEBT TO THE STATE OF ILLINOIS, BUT THE DEBT MAY NOT BE RECORDED ON OUR INVOLUNTARY WITHHOLDING SYSTEM.

*

ENTER=PROCESS, PF3=IOCM, PF12=REFRESH

AREA

OCIS CICIOCP1 OFFSET CONTRACT INQUIRY 13:00 **07/08/19**

ACTION: S

OFFSET: 00 OF 00

VENDOR NUMBER= [redacted]
VENDOR NAME: *
CLAIMING AGENCY NUMBER: *
CLAIMING AGENCY NAME: *
CLAIMING AGENCY PHONE NUMBER: *

DISCLAIMER:
AS OF 07/08/19 AT 13:24 OUR INVOLUNTARY WITHHOLDING SYSTEM DOES NOT HAVE AN ACTIVE CLAIM AGAINST VENDOR NUMBER [redacted]. PLEASE BE ADVISED THAT OUR SYSTEM ONLY CONTAINS CLAIMS FILED BY STATE AGENCIES PURSUANT TO 15 ILCS 405/ 10.05. A VENDOR MAY BE DELIQUENT IN A DEBT TO THE STATE OF ILLINOIS, BUT THE DEBT MAY NOT BE RECORDED ON OUR INVOLUNTARY WITHHOLDING SYSTEM.

*

ENTER=PROCESS, PF3=IOCM, PF12=REFRESH

# STATE OF ILLINOIS
# TAXPAYER IDENTIFICATION NUMBER

I certify that:

The number shown on this form is my correct taxpayer identification number (or I am waiting for a number to be issued to me), and

I am not subject to backup withholding because: (a) I am exempt from backup withholding, or (b) I have not been notified by the Internal Revenue Service (IRS) that I am subject to backup withholding as a result of a failure to report all interest or dividends, or (c) the IRS has notified me that I am no longer subject to backup withholding, and

I am a U.S. person (including a U.S. resident alien).

- If you are an individual, enter your name and SSN as it appears on your Social Security Card.
- If you are a sole proprietor, enter the owner's name on the name line followed by the name of the business and the owner's SSN or EIN.
- If you are a single-member LLC that is disregarded as an entity separate from its owner, enter the owner's name on the name line and the D/B/A on the business name line and enter the owner's SSN or EIN.
- If the LLC is a corporation or partnership, enter the entity's business name and EIN and for corporations, attach IRS acceptance letter (CP261 or CP277).
- For all other entities, enter the name of the entity as used to apply for the entity's EIN and the EIN.

Name: Click here to enter text.

Business Name: Walsh Construction Company II, LLC

Taxpayer Identification Number:

Social Security Number: Click here to enter text.

or

Employer Identification Number: [redacted]

Legal Status (check one):

- ☐ Individual
- ☐ Sole Proprietor
- ☐ Partnership
- ☐ Legal Services Corporation
- ☐ Tax-exempt
- ☐ Corporation providing or billing medical and/or health care services
- ☐ Corporation NOT providing or billing medical and/or health care services
- ☐ Governmental
- ☐ Nonresident alien
- ☐ Estate or trust
- ☐ Pharmacy (Non-Corp.)
- ☐ Pharmacy/Funeral Home/Cemetery (Corp.)
- ☒ Limited Liability Company (select applicable tax classification)
  - ☐ C = corporation
  - ☒ P = partnership [redacted]

Signature of Authorized Representative: [redacted]

Date: 6/6, 2019

*File Number* 0286187-9

## *To all to whom these Presents Shall Come, Greeting:*

*I, Jesse White, Secretary of State of the State of Illinois, do hereby certify that I am the keeper of the records of the Department of Business Services. I certify that*

WALSH CONSTRUCTION COMPANY II, LLC, HAVING ORGANIZED IN THE STATE OF ILLINOIS ON SEPTEMBER 03, 2009, APPEARS TO HAVE COMPLIED WITH ALL PROVISIONS OF THE LIMITED LIABILITY COMPANY ACT OF THIS STATE, AND AS OF THIS DATE IS IN GOOD STANDING AS A DOMESTIC LIMITED LIABILITY COMPANY IN THE STATE OF ILLINOIS.

***In Testimony Whereof,*** *I hereto set my hand and cause to be affixed the Great Seal of the State of Illinois, this* 7TH *day of* JANUARY *A.D.* 2019 .

Authentication #: 1900700180 verifiable until 01/07/2020
Authenticate at: http://www.cyberdriveillinois.com

[redacted]

SECRETARY OF STATE

# Certificate of Registration

STATE BOARD OF ELECTIONS

## Registration No. 24072

## Walsh Construction Company II, LLC

929 W. Adams Street

Chicago IL 60607

Information for this business last updated on:

Thursday, May 3, 2018

Certificate produced on Monday, February 25, 2019 at 8:10 AM

Registered Business

# STATE OF ILLINOIS
# FORMS B CERTIFICATIONS AND DISCLOSURES

IPB Reference #: Procurement/Contract #: I-18-4428

This Forms B may be used when responding to an Invitation for Bid (IFB) or a Request for Proposal (RFP) if the vendor is registered in the Illinois Procurement Gateway (IPG) and has a valid IPG Registration Number that is active and not expired.

If a vendor does not have a valid IPG registration number, then the vendor must complete and submit Forms A with their response. Failure to do so may render the submission non-responsive and result in disqualification.

Please read this entire section and provide the requested information as applicable. All parts in Forms B must be completed in full and submitted along with the vendor's response.

1. **Certification of Illinois Procurement Gateway Registration**

   My business has a valid Illinois Procurement Gateway (IPG) registration. The State of Illinois Chief Procurement Office approved the registration and provided the IPG registration number and expiration date disclosed in this Forms B.

   To ensure that you have a valid registration in the IPG, search for your business name in the IPG Registered Vendor Directory. If your company does not appear in the search results, then you do not have a valid IPG registration.

   IPG Registration #: 20145768 IPG Expiration Date: 4/8/2020

2. **Certification Timely to this Solicitation or Contract**

   Vendor certifies it is not barred from having a contract with the State based upon violating the prohibitions related to either submitting/writing specifications or providing assistance to an employee of the State of Illinois by reviewing, drafting, directing, or preparing any invitation for bids, a request for proposal, or request of information, or similar assistance (except as part of a public request for such information). 30 ILCS 500/50-10.5(e).
   ☒ Yes ☐ No

3. **Disclosure of Lobbyist or Agent** (Complete only if bid, offer, or contract has an annual value over $50,000)

   Is your company or parent entity(ies) represented by or do you or your parent entity(ies) employ a lobbyist required to register under the Lobbyist Registration Act (lobbyist must be registered pursuant to the Act with the Secretary of State) or an agent who has communicated, is communicating, or may communicate with any State officer or employee concerning the bid or offer? If yes, please identify each lobbyist and agent, including the name and address below. ☐ Yes ☒ No

   If yes, please identify each lobbyist and agent, including the name and address below. If you have a lobbyist that does not meet the criteria, then you do not have to disclose the lobbyist's information. Additional rows may be inserted into the table or an attachment may be provided if needed.

| Name | Address | Relationship to Disclosing Entity |
|---|---|---|
| Click here to enter text. | Click here to enter text. | Click here to enter text. |
| | | |

   Describe all costs/fees/compensation/reimbursements related to the assistance provided by each representative lobbyist or other agent to obtain this Agency contract: Click here to enter text.

4. **Disclosure of Current and Pending Contracts**

## STATE OF ILLINOIS
## FORMS B CERTIFICATIONS AND DISCLOSURES

Complete only if: (a) your business is for-profit and (b) the bid, offer, or contract has an annual value over $50,000. Do not complete if you are a not-for-profit entity.

☒ Yes ☐ No. Do you have any contracts, pending contracts, bids, proposals, subcontracts, leases or other ongoing procurement relationships with units of State of Illinois government?

If "Yes", please specify below. Additional rows may be inserted into the table or an attachment in the same format may be provided if needed.

| Agency | Project Title | Status | Value | Contract Reference/P.O./Illinois Procurement Bulletin # |
|---|---|---|---|---|
| Please See Attached | Click here to enter text. | Click here to enter text. | Click here to enter text. | Click here to enter text. |
| Click here to enter text. | Click here to enter text. | Click here to enter text. | Click here to enter text. | Click here to enter text. |

5. **Signature**

As of the date signed below, I certify that:

- My business' information and the certifications made in the Illinois Procurement Gateway are truthful and accurate.
- The certifications and disclosures made in this Forms B are truthful and accurate.

This Forms B is signed by an authorized officer or employee on behalf of the bidder, offeror, or vendor pursuant to Sections 50-13 and 50-35 of the Illinois Procurement Code, and the affirmation of the accuracy of the financial disclosures is made under penalty of perjury.

This disclosure information is submitted on behalf of:

Vendor Name: Walsh Construction Company II, LLC

Street Address: 929 W Adams Street

City, State, Zip: Chicago, IL 60607

Phone: 312.563.5400

Email: tpolk@walshgroup.com

Vendor Contact: Diana Meziere

Signat[redacted]

Date: 6/6/2019

Printed Name: Sean C Walsh

Title: President

## CURRENT CONTRACTS WITH GOVERNMENT AGENCIES IN THE STATE OF ILLINOIS

| CUSTOMER NAME | JOB NAME | Status | FORECASTED CONTRACT VALUE | CONTRACT/ PROJECT ID # |
|---|---|---|---|---|
| | | | | |
| MWRD | Thornton Composite Connecting Tunnels & Gates | Current | $ 133,766,294 | 04-202-4F |
| NORTHEAST ILLINOIS RAILROAD CORP. | METRA U.P. North Line Reconstruction | Current | $ 68,857,486 | K02512 |
| MWRD | Final Reservior Preparation Thonton Composite | Current | $ 41,204,113 | 04-203-4F |
| CITY OF CHICAGO | Torrence Avenue Grad Separation - B-3-332 | Current | $ 114,251,382 | B-3-332 / 23954 |
| CITY OF CHICAGO | Runway 10C-28C Center - OMP - JV | Current | $ 111,344,546 | 24640 |
| MWRD | MWRD - O'Brien Plant Disinfection Facilities | Current | $ 61,472,380 | 11-054-3P |
| CHICAGO DEPT OF TRANSPORTATION | CHICAGO RIVERWALK - State St to LaSalle St | Current | $ 41,700,362 | E-0-621 / 29003 |
| CHICAGO TRANSIT AUTHORITY | CTA Wilson Transfer Station Rebid - JV | Current | $ 152,653,179 | C14FI101514672 |
| ILLINOIS DEPT OF TRANSPORTATION | IDOT #195: I-290 Widening (Peoria to Racine) | Current | $ 33,028,471 | 60X61 |
| CHICAGO DEPT OF TRANSPORTATION | Chicago Riverwalk - LaSalle to Lake Street | Current | $ 54,176,280 | E-0-621B / 32517 |
| CHICAGO DEPT OF TRANSPORTATION | West Adams Street Bascule Bridge and Viaduct | Current | $ 33,559,519 | E-5-430 / 33473 |
| MWRD | McCook Reservoir Des Plaines Inflow Tunnel | Current | $ 115,772,968 | 13-106-4F |
| CITY OF CHICAGO DEPT OF AVIATION | O'Hare 9C-27C East Package | Current | $ 71,044,149 | OH.6143.200.50.321 / 41567 |
| CITY OF CHICAGO DEPT OF AVIATION | O'Hare Taxiway Z/J & Tank Farm Road | Current | $ 57,484,840 | OH.6143.710.371.50 / 58617 |
| IL. STATE TOLL HIGHWAY AUTHORITY | I-88 York Road to I-290 | Current | $ 49,347,535 | RR-13-4116 |
| CHICAGO TRANSIT AUTHORITY | CTA-Belmont & Jefferson Park Station Improvements | Current | $ 31,836,060 | C17FI101997490 |
| CHICAGO TRANSIT AUTHORITY | CTA-South ML Garfield Gateway Station Renovation | Current | $ 25,848,669 | C17FT101997508 |
| ILLINOIS DEPT OF TRANSPORTATION | IDOT 64E26: I-74 Reconstruction (7th Ave South) | Current | $ 84,767,218 | 64E260 |
| ILLINOIS DEPT OF TRANSPORTATION | IDOT #8 Construction of A 78" Storm Sewer Along WB290 | Current | $ 2,382,824 | 62D780 |
| IL. STATE TOLL HIGHWAY AUTHORITY | I-94 Edens Spur - Pfingsten Rd to UPRR | Current | $ 46,948,678 | I-18-4373 |
| CITY OF CHICAGO DEPT OF AVIATION | O'Hare Taxiway Z/J & Tank Farm Road Package B | Current | $ 12,699,049 | OH.6143.710.372.50 / 79798 |
| CHICAGO TRANSIT AUTHORITY | CTA RPM Phase 1 | Current | $ 1,272,275,929 | C17FT102011817 |
| CITY OF CHICAGO DEPT OF AVIATION | O'Hare Terminal 5 - Concourse M Extension Site/Civil | Current | $ 60,437,747 | 92975 |
| CITY OF CHICAGO DEPT OF AVIATION | O'Hare Runway 9C-27C (BP #3) & Runway 4L-22R Rehab | Current | $ 84,840,540 | 94126 |
| IL. STATE TOLL HIGHWAY AUTHORITY | Tollway 4117R I-88 Ramp & Roadway | Current | $ 14,211,816 | RR-13-4117R |

## Vendor Registration: View

Help & Tools

General | Public Profile | Users | Commodity Codes | Contacts & Owners | Comments | Certifications | Site Visits | Registrations | Reports

WALSH CONSTRUCTION COMPANY II, LLC. System Vendor Number: 20145768

View All Forms In PDF Download Documents

### Vendor Registration

| | |
|---|---|
| TYPE | State of Illinois Vendor Registration |
| DESCRIPTION | Register to do business with the State of Illinois |
| DATE SUBMITTED | 4/8/2019 |
| STATUS | Accepted |
| STATE OF ILLINOIS VENDOR REGISTRATION NUMBER | IPG-0294500 |
| REVIEWER | Angela Davis |
| DATE REVIEWED | 4/9/2019 |
| PUBLIC REVIEW COMMENTS | |
| PRIVATE REVIEW COMMENTS | Vendor submitted complete registration. |
| EXPIRATION DATE | 4/8/2020 |
| FLAG FORM | Add Flag |

### Settings

| | |
|---|---|
| SMALL BUSINESS SET-ASIDE PROGRAM (SBSP) REGISTERED | No |
| REGISTERING AS A | Prime Contractor |

### Entity Information

| | |
|---|---|
| BUSINESS NAME | WALSH CONSTRUCTION COMPANY II, LLC. |
| CONTACT FOR THIS SUBMISSION | Diana Meziere (change contact) |
| PRIMARY CONTACT EMAIL | dmeziere@walshgroup.com |
| PHONE | 781-793-9988 Ext. 4050 |
| FAX | 312-563-5467 |
| COMPANY EMAIL | cparrillo@walshgroup.com |
| TAX ID NUMBER | [redacted] |
| COMPANY TYPE | LLC |
| ADDRESS | 929 WEST ADAMS STREET<br>CHICAGO, IL 60607 |

## Vendor Registration: View Form

Help & Tools

General | Public Profile | Users | Commodity Codes | Contacts & Owners | Comments | Certifications | Site Visits | Registrations | Reports

WALSH CONSTRUCTION COMPANY II, LLC System Vendor Number: 20145768

Return to Main Form

View Clean Form in PDF

### Vendor Registration

| | |
|---|---|
| FORM NAME | A - B. Business Information & Additional Information |
| DESCRIPTION | Complete section A and B, in order to submit this form. |
| DATE SUBMITTED | 4/8/2019 |
| STATUS | Accepted |
| BUSINESS NAME | WALSH CONSTRUCTION COMPANY II, LLC |
| POINT OF CONTACT | Diana Meziere |
| FLAG FORM | Add Flag |

### A. Business Information

| | |
|---|---|
| 1. YOUR BUSINESS IS REGISTERING AS A | Prime Contractor only- All Forms A-I must be completed. |
| 2. NAME OF CEO/BUSINESS OWNER | Sean C Walsh |
| 3. ANNUAL SALES/GROSS RECEIPTS | 1,963,687,990 |
| 4. WHEN WAS YOUR BUSINESS ESTABLISHED? | 09/03/2009 |
| 5. IN WHAT ILLINOIS COUNTY(IES) ARE YOU CONDUCTING BUSINESS? | The business conducts business statewide. |
| 6. CONTACT PERSON FOR THIS VENDOR REGISTRATION | Diana Meziere |
| CONTACT PERSON TITLE | Executive Assistant |
| CONTACT PERSON PHONE | 312.563.5444 |
| CONTACT PERSON EMAIL | dmeziere@walshgroup.com |

### B. Additional Information

| | |
|---|---|
| 1. HOW DID YOU LEARN ABOUT THE ILLINOIS PROCUREMENT GATEWAY? | Other<br>Tollway |

# Vendor Registration: View Form

Help & Tools

General | Public Profile | Users | Commodity Codes | Contacts & Owners | Comments | Certifications | Site Visits | Registrations | Reports

WALSH CONSTRUCTION COMPANY II, LLC. System Vendor Number: 20145768

Return to Main Form

View Clean Form In PDF

## Vendor Registration

| | |
|---|---|
| FORM NAME | C. Small Business Set-Aside Program |
| DESCRIPTION | Complete the Small Business Set-Aside Program form |
| DATE SUBMITTED | 4/8/2019 |
| STATUS | Accepted |
| BUSINESS NAME | WALSH CONSTRUCTION COMPANY II, LLC. |
| POINT OF CONTACT | Diana Meziere |
| FLAG FORM | Add Flag |

## C. Small Business Set-Aside Program

| | |
|---|---|
| 1. WOULD YOU LIKE TO APPLY/RE-QUALIFY FOR THE SMALL BUSINESS SET-ASIDE PROGRAM? | No |

## Additional Information

STAFF ATTACHED FILE(S) Attach File

Refresh List **after attaching file(s).**



Copyright © 2019 B2Gnow. All rights reserved.

## Vendor Registration: View Form

Help & Tools

General | Public Profile | Users | Commodity Codes | Contacts & Owners | Comments | Certifications | Site Visits | Registrations | Reports

WALSH CONSTRUCTION COMPANY II, LLC

System Vendor Number: 20145768

Return to Main Form

View Clean Form in PDF

### Vendor Registration

| | |
|---|---|
| FORM NAME | D - E. Department of Human Rights (DHR) & Authorized to do Business in Illinois |
| DESCRIPTION | Complete section D and E, in order to submit this form. |
| DATE SUBMITTED | 4/8/2019 |
| STATUS | Accepted |
| BUSINESS NAME | WALSH CONSTRUCTION COMPANY II, LLC |
| POINT OF CONTACT | Diana Mezlere |
| FLAG FORM | Add Flag |

### D. Department of Human Rights (DHR)

| | |
|---|---|
| 1. HIGHEST NUMBER OF EMPLOYEES (INCLUDING FULL AND PART TIME EMPLOYEES) AT ANY TIME DURING THE PAST YEAR | 2502 |
| 2. SELECT THE DHR STATUS OF YOUR BUSINESS | My business had 15 or more employees at any time within the past year.<br>133354-00 3/8/2021 |

### E. Authorized to do Business in Illinois

| | |
|---|---|
| 1. IS YOUR BUSINESS REGISTERED AND AUTHORIZED TO DO BUSINESS IN ILLINOIS? | Yes, registered and in good standing with the Illinois Secretary of State |

### Additional Information

STAFF ATTACHED FILE(S)

Attach File

Refresh List after attaching file(s).

## Vendor Registration: View Form

Help & Tools

General | Public Profile | Users | Commodity Codes | Contacts & Owners | Comments | Certifications | Site Visits | Registrations | Reports

WALSH CONSTRUCTION COMPANY II, LLC. System Vendor Number: 20145768

Return to Main Form

View Clean Form In PDF

### Vendor Registration

| | |
|---|---|
| FORM NAME | **F - G. Certifications & Board of Elections** |
| DESCRIPTION | Complete section F - G, in order to submit the form. |
| DATE SUBMITTED | 4/8/2019 |
| STATUS | Accepted |
| BUSINESS NAME | WALSH CONSTRUCTION COMPANY II, LLC. |
| POINT OF CONTACT | Diana Mezlere |
| FLAG FORM | Add Flag |

### F. Certifications

1. VENDOR CERTIFIES IT AND ITS EMPLOYEES WILL COMPLY WITH APPLICABLE PROVISIONS OF THE UNITED STATES. CIVIL RIGHTS ACT, SECTION 504 OF THE FEDERAL REHABILITATION ACT, THE AMERICANS WITH DISABILITIES ACT, AND APPLICABLE RULES IN PERFORMANCE OF THIS CONTRACT.

Yes

2. THIS APPLIES TO INDIVIDUALS, SOLE PROPRIETORSHIPS, GENERAL PARTNERSHIPS, AND SINGLE MEMBER LLCS, BUT IS NOT OTHERWISE APPLICABLE. VENDOR CERTIFIES HE/SHE IS NOT IN DEFAULT ON AN EDUCATIONAL LOAN. 5 ILCS 385/3

N/A

3. VENDOR CERTIFIES THAT IT HAS REVIEWED AND WILL COMPLY WITH THE DEPARTMENT OF EMPLOYMENT SECURITY LAW (20 ILCS 1005/1005-47) AS APPLICABLE

Yes

4. VENDOR CERTIFIES IT HAS NEITHER BEEN CONVICTED OF BRIBING OR ATTEMPTING TO BRIBE AN OFFICER OR EMPLOYEE OF THE STATE OF ILLINOIS OR ANY OTHER STATE, NOR MADE AN ADMISSION OF GUILT OF SUCH CONDUCT THAT IS A MATTER OF RECORD. 30 ILCS 500/50-5

Yes

5. IF VENDOR HAS BEEN CONVICTED OF A FELONY, VENDOR CERTIFIES AT LEAST FIVE YEARS HAVE PASSED SINCE THE DATE OF COMPLETION OF THE SENTENCE FOR SUCH FELONY, UNLESS NO PERSON HELD RESPONSIBLE BY A PROSECUTOR'S OFFICE FOR THE FACTS UPON WHICH THE CONVICTION WAS BASED CONTINUES TO HAVE ANY INVOLVEMENT WITH THE BUSINESS. VENDOR FURTHER CERTIFIES THAT IT IS NOT BARRED FROM BEING AWARDED A CONTRACT. 30 ILCS 500/50-10

Yes

6. IF VENDOR OR ANY OFFICER, DIRECTOR, PARTNER, OR OTHER MANAGERIAL AGENT OF VENDOR HAS BEEN CONVICTED OF A FELONY UNDER THE SARBANES-OXLEY ACT OF 2002, OR A CLASS 3 OR CLASS 2 FELONY UNDER THE ILLINOIS SECURITIES LAW OF 1953, VENDOR CERTIFIES AT LEAST FIVE YEARS HAVE PASSED SINCE THE DATE OF THE CONVICTION. VENDOR FURTHER CERTIFIES THAT IT IS NOT BARRED FROM BEING AWARDED A CONTRACT. 30 ILCS 500/50-10 5

Yes

7. VENDOR CERTIFIES THAT IT AND ITS AFFILIATES ARE NOT DELINQUENT IN THE PAYMENT OF ANY DEBT TO THE UNIVERSITY OR THE STATE (OR IF DELINQUENT, HAVE ENTERED INTO A DEFERRED PAYMENT PLAN TO PAY THE DEBT). 30 ILCS 500/50-11, 50-60

Yes

8. VENDOR CERTIFIES THAT IT AND ALL AFFILIATES SHALL COLLECT AND REMIT ILLINOIS USE TAX ON ALL SALES OF TANGIBLE PERSONAL PROPERTY INTO THE STATE OF ILLINOIS IN ACCORDANCE WITH PROVISIONS OF THE ILLINOIS USE TAX ACT. 30 ILCS 500/50-12

Yes

9. VENDOR CERTIFIES THAT IT HAS NOT BEEN FOUND BY A COURT OR THE POLLUTION CONTROL BOARD TO HAVE COMMITTED A WILLFUL OR KNOWING VIOLATION OF THE ENVIRONMENTAL PROTECTION ACT WITHIN THE LAST FIVE YEARS, AND IS THEREFORE NOT BARRED FROM BEING AWARDED A CONTRACT. 30 ILCS 500/50-14

Yes

10. VENDOR CERTIFIES IT HAS NEITHER PAID ANY MONEY OR VALUABLE THING TO INDUCE ANY PERSON TO REFRAIN FROM BIDDING ON A STATE CONTRACT, NOR ACCEPTED ANY MONEY OR OTHER VALUABLE THING, OR ACTED UPON THE PROMISE OF SAME, FOR NOT BIDDING ON A STATE CONTRACT. 30 ILCS 500/50-25

Yes

11. VENDOR CERTIFIES IT HAS READ, UNDERSTANDS AND IS NOT KNOWINGLY IN VIOLATION OF THE "REVOLVING DOOR" PROVISION OF THE ILLINOIS PROCUREMENT CODE. 30 ILCS 500/50-30

Yes

12. VENDOR CERTIFIES THAT IF IT HIRES A PERSON REQUIRED TO REGISTER UNDER THE LOBBYIST REGISTRATION ACT TO ASSIST IN OBTAINING ANY STATE CONTRACT, THAT NONE OF THE LOBBYIST'S COSTS, FEES, COMPENSATION, REIMBURSEMENTS OR OTHER REMUNERATION WILL BE BILLED TO THE STATE. 30 ILCS 500/50-38

Yes

13. VENDOR CERTIFIES THAT IT WILL NOT RETAIN A PERSON OR ENTITY TO ATTEMPT TO INFLUENCE THE OUTCOME OF A PROCUREMENT DECISION FOR COMPENSATION CONTINGENT IN WHOLE OR IN PART UPON THE DECISION OR PROCUREMENT.30 ILCS 500/50-38

Yes

14. VENDOR CERTIFIES IT WILL REPORT TO THE ILLINOIS ATTORNEY GENERAL AND THE CHIEF PROCUREMENT OFFICER ANY SUSPECTED COLLUSION OR OTHER ANTI-COMPETITIVE PRACTICE AMONG ANY BIDDERS, OFFERORS, CONTRACTORS, PROPOSERS, OR EMPLOYEES OF THE STATE. 30 ILCS 500/50-40, 50-45, 50-50

Yes

15. VENDOR CERTIFIES THAT IF IT IS AWARDED A CONTRACT THROUGH THE USE OF THE PREFERENCE REQUIRED BY THE PROCUREMENT OF DOMESTIC PRODUCTS ACT, THEN IT SHALL PROVIDE PRODUCTS PURSUANT TO THE CONTRACT OR A SUBCONTRACT THAT ARE MANUFACTURED IN THE UNITED STATES. 30 ILCS 517

Yes

16. VENDOR CERTIFIES THAT IF AWARDED A CONTRACT FOR PUBLIC WORKS, STEEL PRODUCTS USED OR SUPPLIED IN THE PERFORMANCE OF THAT CONTRACT SHALL BE MANUFACTURED OR PRODUCED IN THE UNITED STATES, UNLESS THE EXECUTIVE HEAD OF THE PROCURING AGENCY/UNIVERSITY GRANTS AN EXCEPTION IN WRITING. 30 ILCS 565

Yes

17. IF VENDOR IS AWARDED A CONTRACT WORTH MORE THAN $5,000 AND EMPLOYS 25 OR MORE EMPLOYEES, VENDOR CERTIFIES IT WILL PROVIDE A DRUG FREE WORKPLACE PURSUANT TO THE DRUG FREE WORKPLACE ACT. 30 ILCS 580

Yes

18. IF VENDOR IS AN INDIVIDUAL AND IS AWARDED A CONTRACT WORTH MORE THAN $5,000, VENDOR CERTIFIES IT SHALL NOT ENGAGE IN THE UNLAWFUL MANUFACTURE, DISTRIBUTION, DISPENSATION, POSSESSION, OR USE OF A CONTROLLED SUBSTANCE DURING THE PERFORMANCE OF THE CONTRACT PURSUANT TO THE DRUG FREE WORKPLACE ACT. 30 ILCS 580

Yes

19. VENDOR CERTIFIES THAT NEITHER VENDOR NOR ANY SUBSTANTIALLY OWNED AFFILIATE IS PARTICIPATING OR SHALL PARTICIPATE IN AN INTERNATIONAL BOYCOTT IN VIOLATION OF THE U.S. EXPORT ADMINISTRATION ACT OF 1979 OR THE APPLICABLE REGULATIONS OF THE UNITED STATES DEPARTMENT OF COMMERCE. 30 ILCS 582

Yes

20. VENDOR CERTIFIES THAT NO FOREIGN-MADE EQUIPMENT, MATERIALS, OR SUPPLIES FURNISHED TO THE AGENCY/UNIVERSITY UNDER ANY CONTRACT HAVE BEEN OR WILL BE PRODUCED IN WHOLE OR IN PART BY FORCED LABOR OR INDENTURED LABOR UNDER PENAL SANCTION. 30 ILCS 583

Yes

21. VENDOR CERTIFIES THAT NO FOREIGN-MADE EQUIPMENT, MATERIALS, OR SUPPLIES FURNISHED TO THE AGENCY/UNIVERSITY UNDER ANY CONTRACT HAVE BEEN PRODUCED IN WHOLE OR IN PART BY THE LABOR OR ANY CHILD UNDER THE AGE OF 12. 30 ILCS 584

Yes

22. VENDOR CERTIFIES THAT IF AWARDED A CONTRACT INCLUDING INFORMATION TECHNOLOGY, ELECTRONIC INFORMATION, SOFTWARE, SYSTEMS AND EQUIPMENT, DEVELOPED OR PROVIDED UNDER ANY CONTRACT, IT WILL COMPLY WITH THE APPLICABLE REQUIREMENTS OF THE ILLINOIS INFORMATION TECHNOLOGY ACCESSIBILITY ACT STANDARDS. 30 ILCS 587

Yes

23. VENDOR CERTIFIES THAT IF IT OWNS RESIDENTIAL BUILDINGS, THAT ANY VIOLATION OF THE LEAD POISONING PREVENTION ACT HAS BEEN MITIGATED. 410 ILCS 45

Yes

24. VENDOR CERTIFIES IT HAS NOT BEEN CONVICTED OF THE OFFENSE OF BID RIGGING OR BID ROTATING OR ANY SIMILAR OFFENSE OF ANY STATE OR OF THE UNITED STATES. 720 ILCS 5/33 E-3, E-4, E-11

Yes

25. VENDOR CERTIFIES IT COMPLIES WITH THE ILLINOIS DEPARTMENT OF HUMAN RIGHTS ACT AND RULES APPLICABLE TO PUBLIC CONTRACTS, WHICH INCLUDE PROVIDING EQUAL EMPLOYMENT OPPORTUNITY, REFRAINING FROM UNLAWFUL DISCRIMINATION, AND HAVING WRITTEN SEXUAL HARASSMENT POLICIES. 775 ILCS 5/2-105

Yes

26. VENDOR CERTIFIES IT DOES NOT PAY DUES TO OR REIMBURSE OR SUBSIDIZE PAYMENTS BY ITS EMPLOYEES FOR ANY DUES OR FEES TO ANY "DISCRIMINATORY CLUB." 775 ILCS 25/2

Yes

27. VENDOR WARRANTS AND CERTIFIES THAT IT AND, TO THE BEST OF ITS KNOWLEDGE, ITS SUBCONTRACTORS HAVE AND WILL COMPLY WITH EXECUTIVE ORDER NO. 1 (2007). THE ORDER GENERALLY PROHIBITS VENDORS AND SUBCONTRACTORS FROM HIRING THE THEN-SERVING GOVERNOR'S FAMILY MEMBERS TO LOBBY PROCUREMENT ACTIVITIES OF THE STATE, OR ANY OTHER GOVERNMENT IN ILLINOIS INCLUDING LOCAL GOVERNMENTS IF THAT PROCUREMENT MAY RESULT IN A CONTRACT VALUED AT OVER $25,000. THIS PROHIBITION ALSO APPLIES TO HIRING FOR THAT SAME PURPOSE ANY FORMER STATE EMPLOYEE WHOSE PROCUREMENT AUTHORITY AT ANY TIME DURING THE ONE-YEAR PERIOD PRECEDING THE PROCUREMENT LOBBYING ACTIVITY.

Yes

28. VENDOR CERTIFIES THAT IT HAS READ, UNDERSTANDS AND IS IN COMPLIANCE WITH THE REGISTRATION REQUIREMENTS OF THE ILLINOIS ELECTIONS CODE (10 ILCS 5/9-35) AND THE RESTRICTIONS ON MAKING POLITICAL CONTRIBUTIONS AND RELATED REQUIREMENTS OF THE ILLINOIS PROCUREMENT CODE. 30 ILCS 500/20-160 AND 50-37 VENDOR WILL NOT MAKE A POLITICAL CONTRIBUTION THAT WILL VIOLATE THESE REQUIREMENTS

Yes

29. THIS APPLIES TO INDIVIDUALS, SOLE PROPRIETORSHIPS, GENERAL PARTNERSHIPS, AND SINGLE MEMBER LLCS, BUT IS NOT OTHERWISE APPLICABLE. VENDOR CERTIFIES THAT HE/SHE HAS NOT RECEIVED AN EARLY RETIREMENT INCENTIVE PRIOR TO 1993 UNDER SECTION 14-108.3 OR 16-133.3 OF THE ILLINOIS PENSION CODE OR AN EARLY RETIREMENT INCENTIVE ON OR AFTER 2002 UNDER SECTION 14-108.3 OR 16-133.3 OF THE ILLINOIS PENSION CODE. (30 ILCS 105/15A; 40 ILCS 5/14-108.3; 40 ILCS 5/16-133

N/A

## G. Board of Elections (BOE)

1. IS YOUR BUSINESS REGISTERED WITH THE BOARD OF ELECTIONS (BOE)?

Yes, I certify my business is registered with BOE.

24072

## Additional Information

STAFF ATTACHED FILE(S)

Attach File

Refresh List after attaching file(s).


Copyright © 2019 B2Gnow. All rights reserved.

## Vendor Registration: View Form

Help & Tools

General | Public Profile | Users | Commodity Codes | Contacts & Owners | Comments | Certifications | Site Visits | Registrations | Reports

WALSH CONSTRUCTION COMPANY II, LLC

System Vendor Number: 20145768

Return to Main Form

View Clean Form in PDF

### Vendor Registration

| | |
|---|---|
| FORM NAME | H. Iran Disclosure |
| DESCRIPTION | Complete section H, in order to submit this form. |
| DATE SUBMITTED | 4/8/2019 |
| STATUS | Accepted |
| BUSINESS NAME | WALSH CONSTRUCTION COMPANY II, LLC. |
| POINT OF CONTACT | Diana Mezlere |
| FLAG FORM | Add Flag |

### H. Iran Disclosure

1. DO YOU OR ANY OF YOUR CORPORATE PARENTS OR SUBSIDIARIES HAVE ANY BUSINESS OPERATIONS THAT MUST BE DISCLOSED?

No business operations to disclose.

### Additional Information

STAFF ATTACHED FILE(S)

Attach File

Refresh List **after attaching file(s).**



Copyright © 2019 B2Gnow. All rights reserved.

## Vendor Registration: View Form

Help & Tools

General | Public Profile | Users | Commodity Codes | Contacts & Owners | Comments | Certifications | Site Visits | Registrations | Reports

WALSH CONSTRUCTION COMPANY II, LLC

System Vendor Number: 20145768

Return to Main Form

View Clean Form in PDF

### Vendor Registration

| | |
|---|---|
| FORM NAME | **I. Financial Disclosure & Conflicts of Interest** |
| DESCRIPTION | **Complete the Financial Disclosure & Conflicts of Interest form** |
| DATE SUBMITTED | 4/8/2019 |
| STATUS | Accepted |
| BUSINESS NAME | WALSH CONSTRUCTION COMPANY II, LLC |
| POINT OF CONTACT | Diana Meziere |
| FLAG FORM | Add Flag |

### I. Financial Disclosures & Conflicts of Interest

A. IDENTIFY THE APPLICABLE ENTITY TYPE.

Other Privately Held Entity (i.e. LLC, partnership, privately held corporation with 100 or fewer shareholders, or other **entity type not clearly identified in another option)**

B. IS THERE A PARENT ENTITY THAT OWNS 100% OF THE BUSINESS?

No

C. INSTRUMENT OF OWNERSHIP OR BENEFICIAL INTEREST

**Limited Liability Company Membership Agreement (Series LLC, Low-Profit Limited Liability Partnership)**

1. IS THERE ANY INDIVIDUAL OR ENTITY WHO MEETS ANY OF THE FOLLOWING THRESHOLDS: (A) OWNS MORE THAN 5% OF THE BUSINESS, (B) HOLDS OWNERSHIP SHARE OF THE BUSINESS VALUED IN EXCESS OF $106,447.20, (C) IS ENTITLED TO MORE THAN 5% OF THE BUSINESS' DISTRIBUTIVE INCOME, OR (D) IS ENTITLED TO MORE THAN $106,447.20 OF THE BUSINESS' DISTRIBUTIVE INCOME?

Yes, the information is not publicly available (If any Individuals are listed, answer Yes or No to questions 5-8 and 11-20.)

| Document | Status |
|---|---|
| List of individuals or entities meeting one or more of the listed thresholds. Walsh Percentage of Ownership and Distributive Income Form 3-24-2017v2.docx (DOCX) | Attached by Diana Meziere on 2/20/2019 |

2. PLEASE CERTIFY THAT THE FOLLOWING STATEMENT IS TRUE: ALL INDIVIDUALS OR ENTITIES THAT HOLD AN OWNERSHIP INTEREST IN THE BUSINESS OF GREATER THAN 5% OR VALUED GREATER THAN $106,447.20 HAVE BEEN DISCLOSED IN QUESTION 1.

Yes

3. PLEASE CERTIFY THAT THE FOLLOWING STATEMENT IS TRUE: ALL INDIVIDUALS OR ENTITIES THAT WERE ENTITLED TO RECEIVE DISTRIBUTIVE INCOME IN AN AMOUNT GREATER THAN $106,447.20 OR GREATER THAN 5% OF THE TOTAL DISTRIBUTIVE INCOME OF THE BUSINESS HAVE BEEN DISCLOSED IN QUESTION 1.

Yes

4. DISCLOSURE OF BOARD OF DIRECTORS FOR NOT-FOR-PROFIT ENTITIES.

**Not applicable - For-Profit Entity**

5. FOR THE INDIVIDUALS DISCLOSED ABOVE IN QUESTION 1 AND FOR SOLE PROPRIETORS, ARE ANY OF THEM A PERSON WHO HOLDS AN ELECTIVE OFFICE IN THE STATE OF ILLINOIS OR HOLDS A SEAT IN THE GENERAL ASSEMBLY, OR ARE THEY THE SPOUSE OR MINOR CHILD OF SUCH PERSON?

No

6. FOR THE INDIVIDUALS DISCLOSED ABOVE IN QUESTION 1 AND FOR SOLE PROPRIETORS, ARE ANY OF THEM APPOINTED TO OR EMPLOYED IN ANY OFFICES OR AGENCIES OF STATE GOVERNMENT AND RECEIVE COMPENSATION FOR SUCH EMPLOYMENT IN EXCESS OF 60% ($106,447.20) OF THE SALARY OF THE GOVERNOR, OR ARE ANY OF THEM THE SPOUSE OR MINOR CHILD OF SUCH PERSON?

No

7. FOR THE INDIVIDUALS DISCLOSED ABOVE IN QUESTION 1 AND FOR SOLE PROPRIETORS, ARE ANY OF THEM AN OFFICER OR EMPLOYEE OF THE CAPITAL DEVELOPMENT BOARD OR THE ILLINOIS TOLL HIGHWAY AUTHORITY, OR ARE ANY OF THEM THE SPOUSE OR MINOR CHILD OF SUCH PERSON?

No

8. FOR THE INDIVIDUALS DISCLOSED ABOVE IN QUESTION 1 AND FOR SOLE PROPRIETORS, ARE ANY OF THEM APPOINTED AS A MEMBER OF A BOARD, COMMISSION, AUTHORITY, OR TASK FORCE AUTHORIZED OR CREATED BY STATE LAW OR BY EXECUTIVE ORDER OF THE GOVERNOR, OR ARE THEY THE SPOUSE OR AN IMMEDIATE FAMILY MEMBER WHO CURRENTLY RESIDES OR RESIDED WITH SUCH PERSON WITHIN THE LAST 12 MONTHS?

No

9. IF ANY QUESTION IN 5-8 ABOVE IS ANSWERED YES, PLEASE ANSWER THE FOLLOWING: DO ANY OF THE INDIVIDUALS IDENTIFIED, THEIR SPOUSE, OR MINOR CHILD RECEIVE FROM THE ENTITY MORE THAN 7.5% OF THE ENTITY'S TOTAL DISTRIBUTABLE INCOME OR AN AMOUNT OF DISTRIBUTABLE INCOME IN EXCESS OF THE SALARY OF THE GOVERNOR ($177,412.00)?

No

10. IF ANY QUESTION IN 5-8 ABOVE IS ANSWERED YES, PLEASE ANSWER THE FOLLOWING: IS THERE A COMBINED INTEREST OF ANY INDIVIDUAL IDENTIFIED ALONG WITH THEIR SPOUSE OR MINOR CHILD OF MORE THAN 15% IN THE AGGREGATE OF THE ENTITY'S DISTRIBUTABLE INCOME OR AN AMOUNT OF DISTRIBUTABLE INCOME IN EXCESS OF TWO TIMES THE SALARY OF THE GOVERNOR ($354,824.00)?

No

11. FOR THE INDIVIDUALS DISCLOSED ABOVE IN QUESTION 1 AND FOR SOLE PROPRIETORS, DO ANY OF THEM CURRENTLY HAVE, OR IN THE PREVIOUS 3 YEARS HAD STATE EMPLOYMENT, INCLUDING CONTRACTUAL EMPLOYMENT OF SERVICES? THIS DOES NOT INCLUDE CONTRACTS TO PROVIDE GOODS OR SERVICES TO THE STATE AS A VENDOR.

No

12. FOR THE INDIVIDUALS DISCLOSED ABOVE IN QUESTION 1 AND FOR SOLE PROPRIETORS, HAVE THEIR SPOUSE, FATHER, MOTHER, SON, OR DAUGHTER, HAD STATE EMPLOYMENT, INCLUDING CONTRACTUAL EMPLOYMENT FOR SERVICES, IN THE PREVIOUS 2 YEARS? THIS DOES NOT INCLUDE CONTRACTS TO PROVIDE GOODS OR SERVICES TO THE STATE AS A VENDOR.

No

13. FOR THE INDIVIDUALS DISCLOSED ABOVE IN QUESTION 1 AND FOR SOLE PROPRIETORS, DO ANY OF THEM CURRENTLY HOLD OR HAVE HELD IN THE PREVIOUS 3 YEARS ELECTIVE OFFICE OF THE STATE OF ILLINOIS, THE GOVERNMENT OF THE UNITED STATES, OR ANY UNIT OF LOCAL GOVERNMENT AUTHORIZED BY THE CONSTITUTION OF THE STATE OF ILLINOIS OR THE STATUTES OF THE STATE OF ILLINOIS?

No

14. FOR THE INDIVIDUALS DISCLOSED ABOVE IN QUESTION 1 AND FOR SOLE PROPRIETORS, DO ANY OF THEM HAVE A RELATIONSHIP TO ANYONE (SPOUSE, FATHER, MOTHER, SON, OR DAUGHTER) HOLDING ELECTIVE OFFICE CURRENTLY OR IN THE PREVIOUS 2 YEARS?

No

15. FOR THE INDIVIDUALS DISCLOSED ABOVE IN QUESTION 1 AND FOR SOLE PROPRIETORS, DO ANY OF THEM HOLD OR HAVE HELD IN THE PREVIOUS 3 YEARS ANY APPOINTIVE GOVERNMENT OFFICE OF THE STATE OF ILLINOIS, THE UNITED STATES OF AMERICA, OR ANY UNIT OF LOCAL GOVERNMENT AUTHORIZED BY THE CONSTITUTION OF THE STATE OF ILLINOIS OR THE STATUTES OF THE STATE OF ILLINOIS, WHICH OFFICE ENTITLES THE HOLDER TO COMPENSATION IN EXCESS OF EXPENSES INCURRED IN THE DISCHARGE OF THAT?

No

16. FOR THE INDIVIDUALS DISCLOSED ABOVE IN QUESTION 1 AND FOR SOLE PROPRIETORS, DO ANY OF THEM HAVE A RELATIONSHIP TO ANYONE (SPOUSE, FATHER, MOTHER, SON, OR DAUGHTER) HOLDING APPOINTIVE OFFICE CURRENTLY OR IN THE PREVIOUS 2 YEARS?

No

17. FOR THE INDIVIDUALS DISCLOSED ABOVE IN QUESTION 1 AND FOR SOLE PROPRIETORS, DO ANY OF THEM CURRENTLY HAVE OR IN THE PREVIOUS 3 YEARS HAD EMPLOYMENT AS OR BY ANY REGISTERED LOBBYIST OF THE STATE GOVERNMENT?

No

18. FOR THE INDIVIDUALS DISCLOSED ABOVE IN QUESTION 1 AND FOR SOLE PROPRIETORS, DO ANY OF THEM CURRENTLY HAVE OR IN THE PREVIOUS 2 YEARS HAD A RELATIONSHIP TO ANYONE (SPOUSE, FATHER, MOTHER, SON, OR DAUGHTER) THAT IS OR WAS A REGISTERED LOBBYIST?

No

19. FOR THE INDIVIDUALS DISCLOSED ABOVE IN QUESTION 1 AND FOR SOLE PROPRIETORS, DO ANY OF THEM CURRENTLY HAVE OR IN THE PREVIOUS 3 YEARS HAD COMPENSATED EMPLOYMENT BY ANY REGISTERED ELECTION OR RE-ELECTION COMMITTEE REGISTERED WITH THE SECRETARY OF STATE OR ANY COUNTY CLERK IN THE STATE OF ILLINOIS, OR ANY POLITICAL ACTION COMMITTEE REGISTERED WITH EITHER THE SECRETARY OF STATE OR THE FEDERAL BOARD OF ELECTIONS?

No

20. FOR THE INDIVIDUALS DISCLOSED ABOVE IN QUESTION 1 AND FOR SOLE PROPRIETORS, DO ANY OF THEM CURRENTLY HAVE OR IN THE PREVIOUS 2 YEARS HAD A RELATIONSHIP TO ANYONE (SPOUSE, FATHER, MOTHER, SON, OR DAUGHTER) WHO IS OR WAS A COMPENSATED EMPLOYEE OF ANY REGISTERED ELECTION OR REELECTION COMMITTEE REGISTERED WITH THE SECRETARY OF STATE OR ANY COUNTY CLERK IN THE STATE OF ILLINOIS, OR ANY POLITICAL ACTION COMMITTEE REGISTERED WITH EITHER THE SECRETARY OF STATE OR THE FEDERAL BOARD OF ELECTIONS?

No

21. HAS THERE BEEN ANY DEBARMENT FROM CONTRACTING WITH ANY GOVERNMENTAL ENTITY WITHIN THE PREVIOUS TEN YEARS? THIS APPLIES TO ALL SOLE PROPRIETORS, FOR-PROFIT ENTITIES, NOT-FOR-PROFIT ENTITIES, AND FOR THE INDIVIDUALS DISCLOSED IN QUESTION 1 ABOVE.

No

22. HAS THERE BEEN ANY PROFESSIONAL LICENSURE DISCIPLINE WITHIN THE PREVIOUS TEN YEARS? THIS APPLIES TO ALL SOLE PROPRIETORS, FOR-PROFIT ENTITIES, NOT-FOR-PROFIT ENTITIES, AND FOR THE INDIVIDUALS DISCLOSED IN QUESTION 1 ABOVE.

No

23. HAS THERE BEEN ANY BANKRUPTCY WITHIN THE PREVIOUS TEN YEARS? THIS APPLIES TO ALL SOLE PROPRIETORS, FOR-PROFIT ENTITIES, NOT-FOR-PROFIT ENTITIES, AND FOR THE INDIVIDUALS DISCLOSED IN QUESTION 1 ABOVE.

No

24. HAVE THERE BEEN ANY ADVERSE CIVIL JUDGMENTS AND/OR ADMINISTRATIVE FINDINGS WITHIN THE PREVIOUS TEN YEARS? THIS APPLIES TO ALL SOLE PROPRIETORS, FOR-PROFIT ENTITIES, NOT-FOR-PROFIT ENTITIES, AND FOR THE INDIVIDUALS DISCLOSED IN QUESTION 1 ABOVE.

No

25. HAVE THERE BEEN ANY CRIMINAL FELONY CONVICTIONS WITHIN THE PREVIOUS TEN YEARS? THIS APPLIES TO ALL SOLE PROPRIETORS, FOR-PROFIT ENTITIES, NOT-FOR-PROFIT ENTITIES, AND FOR THE INDIVIDUALS DISCLOSED IN QUESTION 1 ABOVE.

No

## Additional Information

STAFF ATTACHED FILE(S)

Attach File

Refresh List after attaching file(s).



Copyright © 2019 B2Gnow. All rights reserved.

# ILLINOIS PROCUREMENT GATEWAY
# PERCENTAGE OF OWNERSHIP AND DISTRIBUTIVE INCOME FORM

Walsh Construction Company II, LLC

1. Ownership Share – Provide the name and address of each individual or entity and their percentage of ownership if said percentage exceeds 5%, or the dollar value of their ownership if said dollar value exceeds $106,447.20.

2. Distributive Income – Provide the name and address of each individual or entity and their percentage of the disclosing vendor's total distributive income if said percentage exceeds 5% of the total distributive income of the disclosing entity, or the dollar value of their distributive income if said dollar value exceeds $106,447.20.

3. Additional rows may be inserted into the tables or an attachment in a substantially similar format may be provided if needed.

Ownership Share: **The following** entity **has ownership share in Walsh Construction Company II, LLC**

| Table X | | | |
|---|---|---|---|
| Name | Address | Percentage of Ownership | $ Value of Ownership |
| Walsh Construction Group, LLC | 929 W. Adams Chicago Il 60607 | 99.6% | |
| Matthew Walsh-Trust | 929 W Adams, Chicago, IL 60607 | 0.2% | |
| Daniel J Walsh - Trust | 929 W Adams, Chicago, IL 60607 | 0.2% | |

BidBuy ILLINOIS PROCUREMENT

Basic Purchasing | Department Access

NIGP Code Browse | My Account | Customer Service | About

Current Organization: THA - Toll Highway Authority July 19, 2019 8:51:02 AM CDT

Home Items Documents Vendors

Quick Buy [ ] Find It

Lisa Pierotti

## Open Market Bid 19-557THA-ENGCO-B-7785

Status: 2BA - Approved

General | Items | Address | Accounting | Routing | Attachments(13) | Notes | Bidders | Questions | Amendments(9) | Q & A | **Reminders(7)** | Summary

| Due Date* (MM/DD/YYYY) | Comment* (max 250 characters) | Remind Whom* | Days Prior to Remind* | Date Completed (MM/DD/YYYY) | Send Email | Date Entered | Entered By |
|---|---|---|---|---|---|---|---|
| | | | 0 | | ☐ | | |
| 05/23/2019 | Please apply amendment. | Eleanor Curcuro | 0 | 05/23/2019 | ✓ | 05/23/2019 11:40:16 AM | Shanel Bailey |
| 05/30/2019 | Please apply amendment. | Eleanor Curcuro | 0 | 05/30/2019 | ✓ | 05/30/2019 12:05:02 PM | Shanel Bailey |
| 05/31/2019 | Please apply amendment. | Eleanor Curcuro | 0 | 05/31/2019 | ✓ | 05/31/2019 02:49:14 PM | Shanel Bailey |
| 06/04/2019 | Please apply amendment | Eleanor Curcuro | 0 | 06/04/2019 | ✓ | 06/04/2019 03:29:09 PM | Shanel Bailey |
| 06/11/2019 | Please apply amendment. | Eleanor Curcuro | 0 | 06/11/2019 | ✓ | 06/11/2019 03:24:51 PM | Shanel Bailey |
| 07/19/2019 | Waiver Granted | Lisa Pierotti | 0 | | ☑ | 07/19/2019 07:58:01 AM | Waiver/Other PPB |
| 08/01/2019 | Waiver Request | Waiver/Other PPB | 13 | 07/19/2019 | ✓ | 07/18/2019 11:46:56 AM | Lisa Pierotti |

Please save your changes before sorting table. Otherwise, your changes will be lost.

Save & Continue | Reset

Copyright © 2019 Periscope Holdings, Inc. - All Rights Reserved. ILL-PAS2

## Pierotti, Lisa

**From:** il.bidbuy@illinois.gov
**Sent:** Friday, July 19, 2019 8:00 AM
**To:** Pierotti, Lisa
**Subject:** Reminder regarding Bid # 19-557THA-ENGCO-B-7785

Waiver Granted

Use this link to log on to BuySpeed Online: https://www.bidbuy.illinois.gov/bso/login.sdo

Illinois Department of Transportation

# Certificate of Eligibility

Contractor No 6344

Walsh Construction Company II, LLC
929 West Adams St. CHICAGO, IL 60607

WHO HAS FILED WITH THE DEPARTMENT AN APPLICATION FOR PREQUALIFICATION STATEMENT OF EXPERIENCE, EQUIPMENT AND FINANCIAL CONDITION IS HEREBY QUALIFIED TO BID AT ANY OF DEPARTMENT OF TRANSPORTATION LETTINGS IN THE CLASSES OF WORK AND WITHIN THE AMOUNT AND OTHER LIMITATIONS OF EACH CLASSIFICATION, AS LISTED BELOW, FOR SUCH PERIOD AS THE UNCOMPLETED WORK FROM ALL SOURCES DOES NOT EXCEED SUPER. UNLIMITED

| | | |
|---|---|---|
| 001 | EARTHWORK | Unlimited |
| 002 | PCC PAVING | Unlimited |
| 012 | DRAINAGE | Unlimited |
| 014 | ELECTRICAL | $6,550,000 |
| 017 | CONCRETE CONSTRUCTION | Unlimited |
| 034 | DEMOLITION | $37,425,000 |
| 039 | MARINE CONSTRUCTION | $49,900,000 |
| 08A | AGGREGATE BASES & SURF. (A) | Unlimited |
| 09C | HWY., R.R. & WATERWAY STR. | Unlimited |

THIS CERTIFICATE OF ELIGIBILITY IS VALID FROM 5/29/2019 TO 4/30/2020 INCLUSIVE, AND SUPERSEDES ANY CERTIFICATE PREVIOUSLY ISSUED, BUT IS SUBJECT TO REVISION OR REVOCATION, IF AND WHEN CHANGES IN THE FINANCIAL CONDITION OF THE CONTRACTING FIRM OR OTHER FACTS JUSTIFY SUCH REVISIONS OR REVOCATION.
ISSUED AT SPRINGFIELD, ILLINOIS ON 5/29/2019.

[redacted]
Engineer of Construction

IL 494-0645

# PART III: CONTRACT REQUIREMENTS

Contract Bond Agreement

Performance Bond

Payment Bond

Insurance

# AGREEMENT

## CONTRACT NO: I-18-4428

THIS AGREEMENT, authorized by the Board of Directors to be entered into in duplicate this day of **18th**, **July** **2019** by and between THE ILLINOIS STATE TOLL HIGHWAY AUTHORITY (hereinafter referred to as the "AUTHORITY"), and **Walsh Construction Company II, LLC**,

* a corporation organized and existing under the laws of the State of **Illinois** and authorized to do business in Illinois. (Attach Secretary of State certification)
* ~~a partnership consisting of~~
* ~~an individual doing business as~~
* ~~a joint venture consisting of no more than three (3) members.~~

**(* DELETE ALL LINES THAT DO NOT APPLY)**

with principal office in the City of **Chicago**, in the State of **Illinois** (hereinafter referred to as the "CONTRACTOR").

**WITNESSETH:**

In consideration of the premises and of the mutual covenants herein contained, the parties hereto mutually covenant and agree as follows:

### DESCRIPTION AND SCOPE OF WORK

The CONTRACTOR shall perform all of the services and furnish all of the transportation, labor, materials, equipment and any other incidentals necessary or required to construct and complete the project described in this contract, also called The Work.

### CONTRACT

The following documents, taken as a whole, constitute the Contract:

1. This executed Agreement and any supplement thereto.
2. The Contract Bonds.
3. The Addenda.
4. The Special Provisions.
5. The Plans.
6. The Tollway Supplemental Specifications.
7. The IDOT Supplemental Specifications and Recurring Special Provisions.
8. The IDOT Standard Specifications for Road and Bridge Construction.
9. The Bid.
10. The Instructions and Information to Bidders.
11. The Advertisement for Sealed Bids.

The terms and provisions of each and every one of the above documents are a part of this contract. In the event that any provision in any of the foregoing documents conflicts with any provisions in any other of the contract documents, the provisions in the contract document first above enumerated shall govern over the provisions of any other contract document which follows it.

# AGREEMENT

## CONTRACT NO: I-18-4428

**(USE INK ONLY)**

THIS AGREEMENT, authorized by the Board of Directors to be entered into in duplicate this _____ day of_____, _____, 2019 by and between THE ILLINOIS STATE TOLL HIGHWAY AUTHORITY (hereinafter referred to as the "AUTHORITY"), and _____

* a corporation organized and existing under the laws of the State of _____ and authorized to do business in Illinois. (Attach Secretary of State certification)
* a partnership consisting of
* an individual doing business as
* a joint venture consisting of no more than three (3) members.

**(* DELETE ALL LINES THAT DO NOT APPLY)**

with principal office in the City of _____, in the State of _____ (hereinafter referred to as the "CONTRACTOR").

**WITNESSETH:**

In consideration of the premises and of the mutual covenants herein contained, the parties hereto mutually covenant and agree as follows:

### DESCRIPTION AND SCOPE OF WORK

The CONTRACTOR shall perform all of the services and furnish all of the transportation, labor, materials, equipment and any other incidentals necessary or required to construct and complete the project described in this contract, also called The Work.

### CONTRACT

The following documents, taken as a whole, constitute the Contract:

1. This executed Agreement and any supplement thereto.
2. The Contract Bonds.
3. The Addenda.
4. The Special Provisions.
5. The Plans.
6. The Tollway Supplemental Specifications.
7. The IDOT Supplemental Specifications and Recurring Special Provisions
8. The IDOT Standard Specifications for Road and Bridge Construction.
9. The Bid.
10. The Instructions and Information to Bidders.
11. The Advertisement for Sealed Bids.

The terms and provisions of each and every one of the above documents are a part of this contract. In the event that any provision in any of the foregoing documents conflicts with any provisions in any other of the contract documents, the provisions in the contract document first above enumerated shall govern over the provisions of any other contract document which follows it.

## CONTRACT NO: I-18-4428

## CONTRACT BOND AGREEMENT

The CONTRACTOR shall simultaneously herewith furnish and deliver to the Authority a Performance Bond, agreeing to perform the work in accordance with all of the provisions of the contract, as in said Performance Bond provided, and a Payment Bond, agreeing to pay not less than prevailing wages for the work to be performed in accordance with the contract and the laws of the State of Illinois and agreeing to pay all sums of money due for any labor, materials, apparatus, fixtures or machinery and transportation with respect thereto, as in said Payment Bond provided, each dated the same date as this Agreement, in the forms prescribed by the AUTHORITY, and each in an amount equal to the contract price with a corporate surety or sureties acceptable to the AUTHORITY authorized to do business in the State of Illinois.

The CONTRACTOR agrees that said Bonds shall be maintained in full force and effect until final acceptance of the work by the AUTHORITY and thereafter, as provided in Article 103.05 of the Tollway Supplemental Specifications. The CONTRACTOR agrees and will cause the surety to agree to be bound by each and every provision of all of the contract documents.

If any surety upon any bond furnished in connection with this contract becomes unacceptable to the AUTHORITY, or if any such surety fails to furnish reports as to its financial condition from time to time as requested by the AUTHORITY, the CONTRACTOR shall promptly furnish such additional security as may be required from time to time to protect the interests of the AUTHORITY and all persons supplying labor or materials in the prosecution of the work contemplated by this contract.

In the event the surety shall make any assignment for the benefit of creditors or commit any act of bankruptcy, or if it shall be declared bankrupt, or if it shall file a voluntary petition in bankruptcy, or shall in the opinion of the AUTHORITY be insolvent, the CONTRACTOR agrees forthwith upon request of the AUTHORITY to furnish and maintain other corporate surety with respect to said Bonds satisfactory to the AUTHORITY.

## DEFINITIONS

As used in this Agreement, the terms set forth shall have the meanings attributed to them in the Tollway Supplemental Specifications for THE ILLINOIS STATE TOLL HIGHWAY AUTHORITY issued by the AUTHORITY.

## TIME OF PERFORMANCE

The duration of this contract shall commence with the Executive Director's signature and shall continue until July 29, 2022, in accordance with the contract book schedule.

## CONTRACT END DATE

The contract End Date is two (2) years from the Completion Date. Based on the Completion Date stated in the contract at the time of award the End Date July 29, 2024.

This contract maybe renewed for two (2) additional one (1) year terms or one (1) additional two (2) year term, the length of any renewal is to be determined and agreed upon by the Parties.

## CONTRACT NO: I-18-4428

## LIABILITY OF JOINT VENTURE

In the event the successful Bidder (CONTRACTOR) of this Contract is a joint venture, then each individual, partnership, or corporation comprising such joint venture, shall be individually, personally, severally and jointly liable and responsible, financially, legally, and in all other respects, for the full and proper performance of each and every provision and requirement of this Contract, notwithstanding any arrangement, understanding or agreement to the contrary, if any, whether disclosed to the Authority or not, entered into by and between the individual, partnership, joint venture, or corporation comprising such joint venture.

## PERFORMANCE OF THE WORK

The CONTRACTOR shall perform all work under the direct supervision, and to the satisfaction of the Construction Manager . The Construction Manager shall decide all questions which arise as to the quality and acceptability of work performed, manner of performance, rate of progress of the work and interpretation of the specifications, and the Construction Manager's decision shall be final.

Any dispute between the Construction Manager and the CONTRACTOR with respect to any matter shall be decided by the Chief Engineering Officer of The Authority and his decision shall be final.

In the event that the quantity of any item of work as given in the Bid shall be greater or less than estimated, payment shall be made by the AUTHORITY on the basis of the actual quantity completed at the unit price for such item named in the Bid, subject to the provisions of the Article 104.02 of the Tollway Supplemental Specifications.

Notwithstanding anything contained in this contract, all payments to be made pursuant to this contract shall be subject to approval by the Chief Engineering Officer.

## CONSIDERATION

The Authority shall pay the Contractor for the performance of the work, subject to any additions or deductions therein as provided for in the Specifications, in current funds, at the prices for the respective items of work shown in the Bid. Payments are to be made to the Contractor in accordance with and subject to the provisions of the contract documents.

## ASSIGNMENT

This contract may not be assigned, transferred in whole or in part by the Vendor without prior written consent of the Illinois Tollway.

**CONTRACT NO: I-18-4428**

## COVENANT AGAINST CONTINGENT FEES

The CONTRACTOR warrants that no person or selling agency has been employed or retained to solicit or secure this contract upon an agreement or understanding for a commission, percentage, brokerage or contingent fee, excepting bona fide employees or bona fide established commercial or selling agencies maintained by the CONTRACTOR for the purpose of securing business. For breach or violation of this warranty, the AUTHORITY shall have the right to annul this contract without liability or in its discretion to deduct from the contract price or consideration the full amount of such commission, percentage, brokerage or contingent fee.

## TERMINATION / CANCELLATION FOR NON-APPROPRIATION OF FUNDS

This contract is subject to termination and cancellation in any year for which the General Assembly fails to make an appropriation (if such an appropriation is required) to make payments under the terms of the contract. Currently, the Authority is not required to obtain a yearly appropriation of its funds. However, the Authority cannot and does not make any representations or warranties concerning future appropriation requirements.

## COMPTROLLER REQUIREMENTS FOR CONTRACTS

Contractor and any and all subcontractors under this contract agrees to maintain books and records related to the performance of the contract and necessary to support amounts charged to the State under the contract for a minimum of five (5) years from the last action on the contract. Contractor further agrees to cooperate fully with any audit and to make the books and records available to the Auditor General, Chief Procurement Officer, Internal Auditor, Inspector General, and the Purchasing Agency.

The State requires a fee of $15 to cover expenses related to the administration of the Minority Contractor Opportunity Initiative. Any Contractor awarded a contract under Section 20-10, 20-15, 20-25 or 20-30 of the Illinois Procurement Code (30 ILCS 500) of $1,000 or more is required to pay a fee of $15. The Comptroller shall deduct the fee from the first check issued to the Vendor under the contract and deposit the fee in the Comptroller's Administrative Fund.

## FREEDOM OF INFORMATION ACT

This contract and all related public records maintained by, provided to or required to be provided to the State are subject to the Illinois Freedom of Information Act (FOIA) (50 ILCS 140) notwithstanding any provision to the contrary that may be found in this contract.

## GOVERNING LAW; EXCLUSIVE JURISDICTION

This Agreement, and all the rights and duties of the parties arising from or relating in any way to the subject matter of this Agreement or the transaction(s) contemplated by it, shall be governed by, construed and enforced only in accordance with the laws of the United States and the State of Illinois (excluding any conflict of laws provisions that would refer to and apply the substantive laws of another jurisdiction). Any suit or proceeding relating to this Agreement, including arbitration proceedings, shall be brought only in DuPage County, Illinois. ***THE CONTRACTOR CONSENTS TO THE EXCLUSIVE JURISDICTION AND VENUE OF THE COURTS LOCATED IN DUPAGE COUNTY, STATE OF ILLINOIS.***

**CONTRACT NO: I-18-4428**
**NOTICE**

Notices or documents to be given or delivered shall be deemed given or delivered if delivered personally or by registered or certified mail to **Walsh Construction Company II, LLC** at:

929 West Adams Street

Chicago, IL 60607

or to the AUTHORITY at 2700 Ogden Avenue, Downers Grove, Illinois, 60515. Either party may change the place to which notices hereunder may be addressed, by written notice to the other party from time to time or at any time.

Addendum, if any, referred to on Page P-1 hereof, and attached hereto, is a part of this Agreement as if fully set forth hereon.

IN WITNESS WHEREOF, the parties hereto have caused this Agreement to be executed on the day and year first above written.*

Agreed By: [redacted]

[redacted] 7/15/19

President Date

Sean C Walsh

Printed Name as Signed Above

**ATTEST:** [redacted]

[redacted] (Seal)

Secretary

Brian R. Walsh

Printed Name as Signed Above

**THE ILLINOIS STATE TOLL HIGHWAY AUTHORITY**

**APPROVED:** [redacted]

[redacted] 8-13-2019

Will Evans, Chairman/~~José Alvarez, Executive Director~~ Chief Executive Officer Date

**APPROVED:**

[redacted] 8-13-19

Michael Colsch, Chief Financial Officer Date

**APPROVED:**

[redacted] 8/13/19

Kathleen Pasulka-Brown, General Counsel Date

Approved as to Form and Constitutionality

[redacted] 8-13-19

Attorney General, State of Illinois Date

# NON-CORPORATION SIGNATURE FORM

Philip Griffith & Brian Fidoruk, is hereby authorized, directed and

empowered, on behalf of Walsh Construction Company II, LLC, to execute
(Name of Contractor)

contract number I - 18 - 4428 and any and all contract modifications or

documentation in connection with The Illinois State Toll Highway Authority's

Contract No. I - 18 - 4428.

Walsh Construction Company II, LLC
Name of Contractor

By [redacted]

[redacted] President
Title

7/15/19
Date

Non-Corporation Signature Form (104.2) 06-18-2014

The undersigned certifies that they are purchasing goods for use by, or to be included in projects of the Illinois State Toll Highway Authority. The Illinois State Toll Highway Authority is exempt from sales and use taxes in the state of Illinois for the following reason:

X Government Entity

The tax exemption number issued 1/1/15 by the Illinois Department of Revenue is:

***Tax Exempt #*** [redacted]

Business Name Walsh Construction Company II, LLC

Address 929 W. Adams Street

City Chicago State IL Zip 60607

Contract Number I-18-4428

Estimated Contract Start Date 08/09/19

Estimated Contract End Date 07/29/20

Other:

*This form is intended for use by the prime contractor on the above referenced contract number.*

*The prime contractor may provide a copy of this form to associated subcontractors and suppliers.*

*Note: Keep copy with vendor file* *3/5/15 Ver 2.0*

**THE ILLINOIS STATE TOLL HIGHWAY AUTHORITY**

**CONTRACT NO. I-18-4428**

**PERFORMANCE BOND**

**Bond No.** 107105000

**KNOW ALL PERSONS BY THESE PRESENTS**, That we, Walsh Construction Company II, LLC ,
*(Name of Principal)*

- ☐ a corporation organized and existing under the laws of the State of _____ and authorized to do business in the State of Illinois,
- ☒ a limited liability company admitted to transact business in the State of Illinois and in good standing with the State of Illinois,
- ☐ a partnership consisting of _____,
- ☐ an individual doing business as _____,
- ☐ a joint venture consisting of _____,

**("X" ONE AND COMPLETE REMAINING INFORMATION)**

as Principal, and Travelers Casualty and Surety Company of America
*(Name of Surety)*
a corporation organized and existing under the laws of the State of Connecticut with authority to do business in the State of Illinois, as Surety, are held and firmly bound unto The Illinois State Toll Highway Authority in the penal sum of Seventy-Seven Million Three Hundred Seven Thousand Eight Hundred Sixty-Nine Dollars and Eighty-Seven Cents ($77,307,869.87), lawful money of the United States, well and truly to be paid unto said The Illinois State Toll Highway Authority, for the payment to which we bind ourselves, our heirs, executors, administrators, successors and assigns, jointly and severally, firmly by these presents.

**THE CONDITION OF THE FOREGOING OBLIGATION IS SUCH** that whereas, Principal has entered into a written contract with The Illinois State Toll Highway Authority for the work designated as

I-18-4428
*(Insert Contract Number and Description)*

Bridge Reconstruction - (BN 261) - Burlington Northern Santa Fe Railway (BNSF) over the Tri-State Tollway (I-294)

which contract is by reference made a part hereof and is hereinafter referred to as "the Contract".

**NOW, THEREFORE,** if Principal promptly and faithfully performs said work in accordance with the provisions of the Contract and any authorized changes in the Contract that are subsequently made during the original term of the Contract and any extensions thereof that may be granted by the Authority, with or without notice to the Surety, and complies with all the provisions, conditions and requirements of the Contract and any authorized changes in the Contract that are subsequently made, with or without notice to the Surety, then this obligation for Surety's performance of the Contract shall be void; otherwise it shall remain in full force and effect.

Surety hereby waives notice of any changes in the Contract, including extensions of time for the performance thereof.

IN WITNESS WHEREOF, we have duly executed the foregoing obligation and affixed our seals

this 8 day of July, 2019.

Surety Travelers Casualty and Surety Company of America

Address One Tower Square

Hartford, CT 06183

By [redacted]
(Seal) Attorney in Fact Patricia Collins
Attorney-in-Fact

Agent for Surety AEW Insurance Agency, LLC
Patricia Collins

Address 929 W. Adams St.

Chicago, IL 60607

Principal Walsh Construction Company II, LLC

Address 929 W. Adams St.

[redacted]

By [redacted]
(Signature) (Seal)
Sean C. Walsh, President
(Name & Title)

Attest [redacted]
Corporate Secretary Brian R. Walsh
Secretary

**(Attach Surety's Power of Attorney)**

**(Attach Notary Certificate authenticating Signature of Attorney-In-Fact)**

**(Attach Notary Certificate authenticating Signature of Representative of Principal if not attested by Corporate Secretary)**

State of Illinois
County of Cook

On this 8 day of July, 2019, before me personally appeared Patricia Collins, known to me to be the Attorney-in-Fact of **TRAVELERS CASUALTY AND SURETY COMPANY OF AMERICA,** the corporation that executed the within instrument and acknowledged to me that such corporation executed the same.

IN WITNESS WHEREOF, I have hereunto set my hand and affixed my official seal the day and year in this certificate first written above.

[redacted]

Mireya Q Espinosa

OFFICIAL SEAL
MIREYA Q ESPINOSA
NOTARY PUBLIC - STATE OF ILLINOIS
MY COMMISSION EXPIRES:10/21/20

State of Illinois
County of Cook

On this 8 day of July, 2019, before me personally appeared Sean C. Walsh, known to me to be the President of **WALSH CONSTRUCTION COMPANY II, LLC,** the corporation that executed the within instrument and acknowledged to me that such corporation executed the same.

IN WITNESS WHEREOF, I have hereunto set my hand and affixed my official seal the day and year in this certificate first written above.

[redacted]

Mireya Q Espinosa

OFFICIAL SEAL
MIREYA Q ESPINOSA
NOTARY PUBLIC - STATE OF ILLINOIS
MY COMMISSION EXPIRES:10/21/20

| TRAVELERS | Travelers Casualty and Surety Company of America<br>Travelers Casualty and Surety Company<br>St. Paul Fire and Marine Insurance Company |
|---|---|

## POWER OF ATTORNEY

**KNOW ALL MEN BY THESE PRESENTS**: That Travelers Casualty and Surety Company of America, Travelers Casualty and Surety Company, and St. Paul Fire and Marine Insurance Company are corporations duly organized under the laws of the State of Connecticut (herein collectively called the "Companies"), and that the Companies do hereby make, constitute and appoint **Patricia Collins** of **Chicago, Illinois**, their true and lawful Attorney-in-Fact to sign, execute, seal and acknowledge any and all bonds, recognizances, conditional undertakings and other writings obligatory inthe nature thereof on behalf of the Companies in their business of guaranteeing the fidelity of persons, guaranteeing the performance of contracts and executing or guaranteeing bonds and undertakings required or permitted in any actions or proceedings allowed by law.

**IN WITNESS WHEREOF**, the Companies have caused this instrument to be signed, and their corporate seals to be hereto affixed, this **3rd** day of **February, 2017.**

State of Connecticut

City of Hartford ss.

By: [redacted]
Robert L. Raney, Senior Vice President

On this the **3rd** day of **February, 2017**, before me personally appeared **Robert L. Raney**, who acknowledged himself to be the Senior Vice President of Travelers Casualty and Surety Company of America, Travelers Casualty and Surety Company, and St. Paul Fire and Marine Insurance Company, and that he, as such, being authorized so to do, executed the foregoing instrument for the purposes therein contained by signing on behalf of the corporations by himself as a duly authorized officer.

**In Witness Whereof**, I hereunto set my hand and official seal.

My Commission expires the **30th** day of **June, 2021**

[redacted]
Marie C. Tetreault, Notary Public

This Power of Attorney is granted under and by the authority of the following resolutions adopted by the Boards of Directors of Travelers Casualty and Surety Company of America, Travelers Casualty and Surety Company, and St. Paul Fire and Marine Insurance Company, which resolutions are now in full force and effect, reading as follows:

**RESOLVED**, that the Chairman, the President, any Vice Chairman, any Executive Vice President, any Senior Vice President, any Vice President, any Second Vice President, the Treasurer, any Assistant Treasurer, the Corporate Secretary or any Assistant Secretary may appoint Attorneys-in-Fact and Agents to act for and on behalf of the Company and may give such appointee such authority as his or her certificate of authority may prescribe to sign with the Company's name and seal with the Company's seal bonds, recognizances, contracts of indemnity, and other writings obligatory in the nature of a bond, recognizance, or conditional undertaking, and any of said officers or the Board of Directors at any time may remove any such appointee and revoke the power given him or her; and it is

**FURTHER RESOLVED**, that the Chairman, the President, any Vice Chairman, any Executive Vice President, any Senior Vice President or any Vice President may delegate all or any part of the foregoing authority to one or more officers or employees of this Company, provided that each such delegation is in writing and a copy thereof is filed in the office of the Secretary; and it is

**FURTHER RESOLVED**, that any bond, recognizance, contract of indemnity, or writing obligatory in the nature of a bond, recognizance, or conditional undertaking shall be valid and binding upon the Company when (a) signed by the President, any Vice Chairman, any Executive Vice President, any Senior Vice President or any Vice President, any Second Vice President, the Treasurer, any Assistant Treasurer, the Corporate Secretary or any Assistant Secretary and duly attested and sealed with the Company's seal by a Secretary or Assistant Secretary; or (b) duly executed (under seal, if required) by one or more Attorneys-in-Fact and Agents pursuant to the power prescribed in his or her certificate or their certificates of authority or by one or more Company officers pursuant to a written delegation of authority; and it is

**FURTHER RESOLVED**, that the signature of each of the following officers: President, any Executive Vice President, any Senior Vice President, any Vice President, any Assistant Vice President, any Secretary, any Assistant Secretary, and the seal of the Company may be affixed by facsimile to any Power of Attorney or to any certificate relating thereto appointing Resident Vice Presidents, Resident Assistant Secretaries or Attorneys-in-Fact for purposes only of executing and attesting bonds and undertakings and other writings obligatory in the nature thereof, and any such Power of Attorney or certificate bearing such facsimile signature or facsimile seal shall be valid and binding upon the Company and any such power so executed and certified by such facsimile signature and facsimile seal shall be valid and binding on the Company in the future with respect to any bond or understanding to which it is attached.

I, **Kevin E. Hughes**, the undersigned, Assistant Secretary of Travelers Casualty and Surety Company of America, Travelers Casualty and Surety Company, and St. Paul Fire and Marine Insurance Company, do hereby certify that the above and foregoing is a true and correct copy of the Power of Attorney executed by said Companies, which remains in full force and effect.

Dated this 8 day of July , 2019

[redacted]
Kevin E. Hughes, Assistant Secretary

***To verify the authenticity of this Power of Attorney, please call us at 1-800-421-3880.***
***Please refer to the above-named Attorney-in-Fact and the details of the bond to which the power is attached.***

**THE ILLINOIS STATE TOLL HIGHWAY AUTHORITY**

**CONTRACT NO. I-18-4428**

# PAYMENT BOND

**Bond No.** 107105000

**KNOW ALL PERSONS BY THESE PRESENTS**, That we, Walsh Construction Company II, LLC ,
*(Name of Principal)*

- ☐ a corporation organized and existing under the laws of the State of _____ and authorized to do business in the State of Illinois,
- ☒ a limited liability company admitted to transact business in the State of Illinois and in good standing with the State of Illinois,
- ☐ a partnership consisting of _____,
- ☐ an individual doing business as _____,
- ☐ a joint venture consisting of _____,

("X" ONE AND COMPLETE REMAINING INFORMATION)

as Principal, and Travelers Casualty and Surety Company of America
*(Name of Surety)*
a corporation organized and existing under the laws of the State of Connecticut with authority to do business in the State of Illinois, as Surety, are held and firmly bound unto The Illinois State Toll Highway Authority in the penal sum of Seventy-Seven Million Three Hundred Seven Thousand Eight Hundred Sixty-Nine Dollars and Eighty-Seven Cents ($77,307,869.87), lawful money of the United States, well and truly to be paid unto said The Illinois State Toll Highway Authority, for the payment to which we bind ourselves, our heirs, executors, administrators, successors and assigns, jointly and severally, firmly by these presents.

**THE CONDITION OF THE FOREGOING OBLIGATION IS SUCH** that whereas, Principal has entered into a written contract with The Illinois State Toll Highway Authority for the work designated as

I-18-4428
*(Insert Contract Number and Description)*

Bridge Reconstruction - (BN 261) - Burlington Northern Santa Fe Railway (BNSF) over the Tri-State Tollway (I-294)

which contract is by reference made a part hereof and is hereinafter referred to as "the Contract".

**NOW, THEREFORE,** if Principal promptly pays not less than the prevailing wages for the work to be performed in accordance with the Contract and the laws of the State of Illinois, and promptly pays all sums of money due or to become due for any labor, materials, apparatus, fixtures or machinery, and transportation with respect thereto, furnished to said Principal for the purpose of performing said work in accordance with the provisions of the Contract and any authorized changes in the Contract that are subsequently made during the original term of the Contract and any extensions thereof that may be granted by the Authority, with or without notice to the Surety, then this obligation shall be void; otherwise it shall remain in full force and effect.

Surety hereby waives notice of any changes in the Contract, including extensions of time for the performance thereof.

IN WITNESS WHEREOF, we have duly executed the foregoing obligation and affixed our seals

this 8 day of July, 2019.

Surety Travelers Casualty and Surety Company of America

Address One Tower Square

Hartford, CT 06183

By [redacted]
(Seal) Attorney in Fact Patricia Collins
Attorney-in-Fact

Agent for Surety AEW Insurance Agency, LLC
Patricia Collins

Address 929 W. Adams St.

Chicago, IL 60607

Principal Walsh Construction Company II, LLC

Address 929 W. Adams St.

[redacted]

By [redacted]
(Signature) (Seal)

Sean C. Walsh, President
(Name & Title)

Atte[redacted]
Corporate Secretary Brian R. Walsh
Secretary

**(Attach Surety's Power of Attorney)**

**(Attach Notary Certificate authenticating Signature of Attorney-In-Fact)**

**(Attach Notary Certificate authenticating Signature of Representative of Principal if not attested by Corporate Secretary)**

State of Illinois
County of Cook

On this 8 day of July, 2019, before me personally appeared Sean C. Walsh, known to me to be the President of **WALSH CONSTRUCTION COMPANY II, LLC**, the corporation that executed the within instrument and acknowledged to me that such corporation executed the same.

IN WITNESS WHEREOF, I have hereunto set my hand and affixed my official seal the day and year in this certificate first written above.

[redacted]

Mireya Q Espinosa

OFFICIAL SEAL
MIREYA Q ESPINOSA
NOTARY PUBLIC - STATE OF ILLINOIS
MY COMMISSION EXPIRES:10/21/20

State of Illinois
County of Cook

On this 8 day of July, 2019, before me personally appeared Patricia Collins, known to me to be the Attorney-in-Fact of **TRAVELERS CASUALTY AND SURETY COMPANY OF AMERICA,** the corporation that executed the within instrument and acknowledged to me that such corporation executed the same.

IN WITNESS WHEREOF, I have hereunto set my hand and affixed my official seal the day and year in this certificate first written above.

[redacted]

Mireya Q Espinosa

OFFICIAL SEAL
MIREYA Q ESPINOSA
NOTARY PUBLIC - STATE OF ILLINOIS
MY COMMISSION EXPIRES:10/21/20

| TRAVELERS | Travelers Casualty and Surety Company of America<br>Travelers Casualty and Surety Company<br>St. Paul Fire and Marine Insurance Company |
|---|---|

## POWER OF ATTORNEY

**KNOW ALL MEN BY THESE PRESENTS**: That Travelers Casualty and Surety Company of America, Travelers Casualty and Surety Company, and St. Paul Fire and Marine Insurance Company are corporations duly organized under the laws of the State of Connecticut (herein collectively called the "Companies"), and that the Companies do hereby make, constitute and appoint **Patricia Collins** of **Chicago, Illinois**, their true and lawful Attorney-in-Fact to sign, execute, seal and acknowledge any and all bonds, recognizances, conditional undertakings and other writings obligatory inthe nature thereof on behalf of the Companies in their business of guaranteeing the fidelity of persons, guaranteeing the performance of contracts and executing or guaranteeing bonds and undertakings required or permitted in any actions or proceedings allowed by law.

**IN WITNESS WHEREOF**, the Companies have caused this instrument to be signed, and their corporate seals to be hereto affixed, this **3rd** day of **February, 2017.**

State of Connecticut

City of Hartford ss.

By: [redacted]
Robert L. Raney, Senior Vice President

On this the **3rd** day of **February, 2017**, before me personally appeared **Robert L. Raney**, who acknowledged himself to be the Senior Vice President of Travelers Casualty and Surety Company of America, Travelers Casualty and Surety Company, and St. Paul Fire and Marine Insurance Company, and that he, as such, being authorized so to do, executed the foregoing instrument for the purposes therein contained by signing on behalf of the corporations by himself as a duly authorized officer.

**In Witness Whereof**, I hereunto set my hand and official seal.

My Commission expires the **30th** day of **June, 2021**

[redacted]
Marie C. Tetreault, Notary Public

This Power of Attorney is granted under and by the authority of the following resolutions adopted by the Boards of Directors of Travelers Casualty and Surety Company of America, Travelers Casualty and Surety Company, and St. Paul Fire and Marine Insurance Company, which resolutions are now in full force and effect, reading as follows:

**RESOLVED**, that the Chairman, the President, any Vice Chairman, any Executive Vice President, any Senior Vice President, any Vice President, any Second Vice President, the Treasurer, any Assistant Treasurer, the Corporate Secretary or any Assistant Secretary may appoint Attorneys-in-Fact and Agents to act for and on behalf of the Company and may give such appointee such authority as his or her certificate of authority may prescribe to sign with the Company's name and seal with the Company's seal bonds, recognizances, contracts of indemnity, and other writings obligatory in the nature of a bond, recognizance, or conditional undertaking, and any of said officers or the Board of Directors at any time may remove any such appointee and revoke the power given him or her; and it is

**FURTHER RESOLVED**, that the Chairman, the President, any Vice Chairman, any Executive Vice President, any Senior Vice President or any Vice President may delegate all or any part of the foregoing authority to one or more officers or employees of this Company, provided that each such delegation is in writing and a copy thereof is filed in the office of the Secretary; and it is

**FURTHER RESOLVED**, that any bond, recognizance, contract of indemnity, or writing obligatory in the nature of a bond, recognizance, or conditional undertaking shall be valid and binding upon the Company when (a) signed by the President, any Vice Chairman, any Executive Vice President, any Senior Vice President or any Vice President, any Second Vice President, the Treasurer, any Assistant Treasurer, the Corporate Secretary or any Assistant Secretary and duly attested and sealed with the Company's seal by a Secretary or Assistant Secretary; or (b) duly executed (under seal, if required) by one or more Attorneys-in-Fact and Agents pursuant to the power prescribed in his or her certificate or their certificates of authority or by one or more Company officers pursuant to a written delegation of authority; and it is

**FURTHER RESOLVED**, that the signature of each of the following officers: President, any Executive Vice President, any Senior Vice President, any Vice President, any Assistant Vice President, any Secretary, any Assistant Secretary, and the seal of the Company may be affixed by facsimile to any Power of Attorney or to any certificate relating thereto appointing Resident Vice Presidents, Resident Assistant Secretaries or Attorneys-in-Fact for purposes only of executing and attesting bonds and undertakings and other writings obligatory in the nature thereof, and any such Power of Attorney or certificate bearing such facsimile signature or facsimile seal shall be valid and binding upon the Company and any such power so executed and certified by such facsimile signature and facsimile seal shall be valid and binding on the Company in the future with respect to any bond or understanding to which it is attached.

I, **Kevin E. Hughes**, the undersigned, Assistant Secretary of Travelers Casualty and Surety Company of America, Travelers Casualty and Surety Company, and St. Paul Fire and Marine Insurance Company, do hereby certify that the above and foregoing is a true and correct copy of the Power of Attorney executed by said Companies, which remains in full force and effect.

Dated this 8 day of July , 2019

[redacted]
Kevin E. Hughes, Assistant Secretary

***To verify the authenticity of this Power of Attorney, please call us at 1-800-421-3880.***
***Please refer to the above-named Attorney-in-Fact and the details of the bond to which the power is attached.***

# CERTIFICATE OF LIABILITY INSURANCE

DATE(MM/DD/YYYY) 08/05/2019

THIS CERTIFICATE IS ISSUED AS A MATTER OF INFORMATION ONLY AND CONFERS NO RIGHTS UPON THE CERTIFICATE HOLDER. THIS CERTIFICATE DOES NOT AFFIRMATIVELY OR NEGATIVELY AMEND, EXTEND OR ALTER THE COVERAGE AFFORDED BY THE POLICIES BELOW. THIS CERTIFICATE OF INSURANCE DOES NOT CONSTITUTE A CONTRACT BETWEEN THE ISSUING INSURER(S), AUTHORIZED REPRESENTATIVE OR PRODUCER, AND THE CERTIFICATE HOLDER.

**IMPORTANT: If the certificate holder is an ADDITIONAL INSURED, the policy(ies) must have ADDITIONAL INSURED provisions or be endorsed. If SUBROGATION IS WAIVED, subject to the terms and conditions of the policy, certain policies may require an endorsement. A statement on this certificate does not confer rights to the certificate holder in lieu of such endorsement(s).**

PRODUCER
Aon Risk Services Central, Inc.
Chicago IL Office
200 East Randolph
Chicago IL 60601 USA

CONTACT NAME:
PHONE (A/C. No. Ext): (866) 283-7122 FAX (A/C. No.): 800-363-0105
E-MAIL ADDRESS:

| INSURER(S) AFFORDING COVERAGE | | NAIC # |
|---|---|---|
| INSURER A: | Arch Insurance Company | 11150 |
| INSURER B: | Berkshire Hathaway Specialty Ins Company | 22276 |
| INSURER C: | North American Specialty Ins Co. | 29874 |
| INSURER D: | Allied World National Assurance Company | 10690 |
| INSURER E: | National Fire & Marine Ins Co | 20079 |
| INSURER F: | North American Capacity Ins Co | 25038 |

INSURED
Walsh Construction Company II, LLC
929 West Adams
Chicago IL 60607 USA

**COVERAGES** **CERTIFICATE NUMBER:** 570077771222 **REVISION NUMBER:**

THIS IS TO CERTIFY THAT THE POLICIES OF INSURANCE LISTED BELOW HAVE BEEN ISSUED TO THE INSURED NAMED ABOVE FOR THE POLICY PERIOD INDICATED. NOTWITHSTANDING ANY REQUIREMENT, TERM OR CONDITION OF ANY CONTRACT OR OTHER DOCUMENT WITH RESPECT TO WHICH THIS CERTIFICATE MAY BE ISSUED OR MAY PERTAIN, THE INSURANCE AFFORDED BY THE POLICIES DESCRIBED HEREIN IS SUBJECT TO ALL THE TERMS, EXCLUSIONS AND CONDITIONS OF SUCH POLICIES. LIMITS SHOWN MAY HAVE BEEN REDUCED BY PAID CLAIMS. **Limits shown are as requested**

| INSR LTR | TYPE OF INSURANCE | ADDL INSD | SUBR WVD | POLICY NUMBER | POLICY EFF (MM/DD/YYYY) | POLICY EXP (MM/DD/YYYY) | LIMITS | |
|---|---|---|---|---|---|---|---|---|
| A | X COMMERCIAL GENERAL LIABILITY<br>CLAIMS-MADE X OCCUR<br>GEN'L AGGREGATE LIMIT APPLIES PER:<br>POLICY X PRO-JECT X LOC<br>OTHER: | | | 41PKG8901913<br>SIR applies per policy terms & conditions | 06/01/2019 | 06/01/2020 | EACH OCCURRENCE | $1,000,000 |
| | | | | | | | DAMAGE TO RENTED PREMISES (Ea occurrence) | $1,000,000 |
| | | | | | | | MED EXP (Any one person) | $25,000 |
| | | | | | | | PERSONAL & ADV INJURY | $1,000,000 |
| | | | | | | | GENERAL AGGREGATE | $4,000,000 |
| | | | | | | | PRODUCTS - COMP/OP AGG | $4,000,000 |
| A | AUTOMOBILE LIABILITY | | | 41PKG8901913<br>AOS | 06/01/2019 | 06/01/2020 | COMBINED SINGLE LIMIT (Ea accident) | $2,000,000 |
| A | X ANY AUTO<br>OWNED AUTOS ONLY<br>HIRED AUTOS ONLY<br>SCHEDULED AUTOS<br>NON-OWNED AUTOS ONLY | | | 41CAB8902013<br>MA Only | 06/01/2019 | 06/01/2020 | BODILY INJURY (Per person) | |
| | | | | | | | BODILY INJURY (Per accident) | |
| | | | | | | | PROPERTY DAMAGE (Per accident) | |
| B | UMBRELLA LIAB OCCUR<br>X EXCESS LIAB CLAIMS-MADE<br>DED RETENTION | | | 47XSF30256804 | 06/01/2019 | 06/01/2020 | EACH OCCURRENCE | $10,000,000 |
| | | | | | | | AGGREGATE | |
| A | WORKERS COMPENSATION AND EMPLOYERS' LIABILITY<br>ANY PROPRIETOR / PARTNER / EXECUTIVE OFFICER/MEMBER EXCLUDED? (Mandatory in NH) Y/N N<br>If yes, describe under DESCRIPTION OF OPERATIONS below | N/A | | 41WCI8910906 | 06/01/2019 | 06/01/2020 | X PER STATUTE OTH-ER | |
| | | | | | | | E.L. EACH ACCIDENT | $1,000,000 |
| | | | | | | | E.L. DISEASE-EA EMPLOYEE | $1,000,000 |
| | | | | | | | E.L. DISEASE-POLICY LIMIT | $1,000,000 |
| E | Env Contr Poll | | | 42CPL30532202<br>SIR applies per policy terms & conditions | 06/01/2019 | 06/01/2020 | Per Claim/Aggr | $2,000,000 |

DESCRIPTION OF OPERATIONS / LOCATIONS / VEHICLES (ACORD 101, Additional Remarks Schedule, may be attached if more space is required)

This voids and replaces previously issued certificate 570077647308 dated 07/25/2019.
Re: Illinois State Toll Highway Authority (Illinois Tollway), Contract: I-18-4428, Project: BNSF Bridge Over I-294, The improvements along the Tri-State (I-294) Tollway at Mile Post 26.6 in Cook County, Illinois, Walsh II No.: 219091.
(See attached).

**CERTIFICATE HOLDER**

The Illinois State Toll
Highway Authority
2700 Ogden Avenue
Downers Grove IL 60515 USA

**CANCELLATION**

SHOULD ANY OF THE ABOVE DESCRIBED POLICIES BE CANCELLED BEFORE THE EXPIRATION DATE THEREOF, NOTICE WILL BE DELIVERED IN ACCORDANCE WITH THE POLICY PROVISIONS.

AUTHORIZED REPRESENTATIVE
[redacted]

Holder Identifier : ABDHLMNOUZ6

Certificate No : 570077771222

©1988-2015 ACORD CORPORATION. All rights reserved.



The ACORD name and logo are registered marks of ACORD

AGENCY CUSTOMER ID: 10774508
LOC #:

# ADDITIONAL REMARKS SCHEDULE



| AGENCY | NAMED INSURED |
|---|---|
| Aon Risk Services Central, Inc. | Walsh Construction Company II, LLC |
| POLICY NUMBER: See Certificate Number: 570077771222 | |
| CARRIER: See Certificate Number: 570077771222 — NAIC CODE: | EFFECTIVE DATE: |

**ADDITIONAL REMARKS**

**THIS ADDITIONAL REMARKS FORM IS A SCHEDULE TO ACORD FORM,**
**FORM NUMBER:** ACORD 25 **FORM TITLE:** Certificate of Liability Insurance

| INSURER(S) AFFORDING COVERAGE | NAIC # |
|---|---|
| INSURER | |
| INSURER | |
| INSURER | |
| INSURER | |

**ADDITIONAL POLICIES** If a policy below does not include limit information, refer to the corresponding policy on the ACORD certificate form for policy limits.

| INSR LTR | TYPE OF INSURANCE | ADDL INSD | SUBR WVD | POLICY NUMBER | POLICY EFFECTIVE DATE (MM/DD/YYYY) | POLICY EXPIRATION DATE (MM/DD/YYYY) | LIMITS | |
|---|---|---|---|---|---|---|---|---|
| | EXCESS LIABILITY | | | | | | | |
| C | | | | EXS200084701<br>$15M xs $10M | 06/01/2019 | 06/01/2020 | Each Occurrence | $15,000,000 |
| D | | | | 03113457<br>$15M xs $25M | 06/01/2019 | 06/01/2020 | Aggregate | $15,000,000 |
| | | | | | | | Each Occurrence | $15,000,000 |
| | OTHER | | | | | | | |
| F | Env Contr Prof | | | CNP100002801<br>SIR applies per policy terms & conditions | 06/01/2019 | 06/01/2020 | Per Claim/Aggr | $2,000,000 |
| A | Excess WC | | | 41WCX8901813<br>SIR XS WC - IL,IN,WA<br>SIR applies per policy terms & conditions | 06/01/2019 | 06/01/2020 | EL Each Accident | $1,000,000 |
| | | | | | | | EL Disease - Policy | $1,000,000 |
| | | | | | | | EL Disease - Ea Empl | $1,000,000 |
| | | | | | | | | |
| | | | | | | | | |
| | | | | | | | | |



© 2008 ACORD CORPORATION. All rights reserved.
The ACORD name and logo are registered marks of ACORD

AGENCY CUSTOMER ID: 10774508

LOC #:

# ADDITIONAL REMARKS SCHEDULE



| AGENCY | NAMED INSURED |
|---|---|
| Aon Risk Services Central, Inc. | Walsh Construction Company II, LLC |
| POLICY NUMBER: See Certificate Number: 570077771222 | |
| CARRIER: See Certificate Number: 570077771222 — NAIC CODE: | EFFECTIVE DATE: |

**ADDITIONAL REMARKS**

**THIS ADDITIONAL REMARKS FORM IS A SCHEDULE TO ACORD FORM,**

**FORM NUMBER:** ACORD 25 **FORM TITLE:** Certificate of Liability Insurance

Continuation

The Illinois State Toll Highway Authority together with its officials, directors and employees, the Village of Hinsdale, the Village of Western Springs and the Western Springs Park District and their agents and employees and Consulting Engineer, Program Management Office (PMO), Project Manager, Design Section Engineer, Design Corridor Manager, Construction Manager, and Construction Corridor Manager are an Additional Insured pertaining to General Liability, Automobile Liability, Excess Liability and Pollution Liability policies with respects to liability arising out of the Named Insured's operations on the referenced project. Professional services for Architects, Engineers, Consultants, etc. are excluded.

The Illinois State Toll Highway Authority together with its officials, directors and employees are to be named as "Additional Insured" with coverage at least as broad as set forth in ISO Form CG 2010 and CG 2037.

The Village of Hinsdale, the Village of Western Springs and the Western Springs Park District and their agents and employees are included as Additional Insured as per Additional Insured Endorsement CG 20 26 07 04.

Consulting Engineer, Program Management Office (PMO), Project Manager, Design Section Engineer, Design Corridor Manager, Construction Manager, and Construction Corridor Manager are to be named as Additional Insured with coverage at least as broad as set forth in ISO form CG 2032 providing coverage for engineers, architects or surveyors.



© 2008 ACORD CORPORATION. All rights reserved.

The ACORD name and logo are registered marks of ACORD

AGENCY CUSTOMER ID: 10774508

LOC #:

# ADDITIONAL REMARKS SCHEDULE



| AGENCY | | NAMED INSURED |
|---|---|---|
| Aon Risk Services Central, Inc. | | Walsh Construction Company II, LLC |
| POLICY NUMBER | | |
| See Certificate Number: 570077771222 | | |
| CARRIER | NAIC CODE | |
| See Certificate Number: 570077771222 | | EFFECTIVE DATE: |

**ADDITIONAL REMARKS**

**THIS ADDITIONAL REMARKS FORM IS A SCHEDULE TO ACORD FORM,**
**FORM NUMBER:** ACORD 25 **FORM TITLE:** Certificate of Liability Insurance

Continuation

A Waiver of Subrogation in favor of The Illinois State Toll Highway Authority, and all their officers, agents and employees, the Village of Hinsdale, the Village of Western Springs and the Western Springs Park District and their agents and employees, Consulting Engineer, Program Management Office (PMO), Project Manager, Design Section Engineer, Design Corridor Manager, Construction Manager, and Construction Corridor Manager are included on the General Liability, Automobile Liability, Excess Liability and Workers' Compensation policies.

This insurance will be Primary and Non-Contributory to the General Liability and Automobile Liability policies with respect to any other available insurance to the Additional Insureds for the negligence of the insured on the referenced project.

Contractual Liability is included, subject to the terms, conditions, limitations and exclusions of the General Liability.

Excess Liability follows form to the underlying General Liability, Automobile Liability and Employers Liability policies.



© 2008 ACORD CORPORATION. All rights reserved.

The ACORD name and logo are registered marks of ACORD

Berkshire Hathaway
Specialty Insurance

**ENDORSEMENT**

| | |
|---|---|
| This endorsement, effective 12:01AM: | **06/01/2019** |
| Forms a part of Policy No.: | **41-CPL-305322-02** |
| Issued to: | **The Walsh Group, Ltd.** |
| By: | **National Fire & Marine Insurance Company** |

# ADDITIONAL INSURED ENDORSEMENT

## THIS ENDORSEMENT CHANGES THE POLICY. PLEASE READ IT CAREFULLY.

**This endorsement modifies insurance provided under the following:**

**CONTRACTOR'S POLLUTION LEGAL LIABILITY**

I. The entity(s) listed below on the Additional Insured Schedule is included as an additional insured(s). Coverage for such additional insured(s) applies under this Endorsement:

a. Solely to the additional insured(s) liability arising out of the "named insured's" "covered operations"

**ADDITIONAL INSURED SCHEDULE**

| |
|---|
| As required by a written contract executed prior to the "occurrence" of "pollution". |

All other terms and conditions of this policy remain unchanged.

**THIS ENDORSEMENT CHANGES THE POLICY. PLEASE READ IT CAREFULLY.**

# ADDITIONAL INSURED – OWNERS, LESSEES OR CONTRACTORS – SCHEDULED PERSON OR ORGANIZATION

This endorsement modifies insurance provided under the following:

COMMERCIAL GENERAL LIABILITY COVERAGE PART

**SCHEDULE**

| Name Of Additional Insured Person(s) Or Organization(s): | Location(s) Of Covered Operations |
|---|---|
| Any person or organization, you have agreed by means of a written contract or agreement, to add as an additional insured; such person or organization is an additional insured on this policy.<br><br>When required by a written contract or agreement, coverage afforded to these additional insured parties will be primary to and non-contributory with any other insurance available to that person or organization. | |
| Information required to complete this Schedule, if not shown above, will be shown in the Declarations. | |

**A.** **Section II – Who Is An Insured** is amended to include as an additional insured the person(s) or organization(s) shown in the Schedule, but only with respect to liability for "bodily injury", "property damage" or "personal and advertising injury" caused, in whole or in part, by:

1. Your acts or omissions; or
2. The acts or omissions of those acting on your behalf;

in the performance of your ongoing operations for the additional insured(s) at the location(s) designated above.

**B.** With respect to the insurance afforded to these additional insureds, the following additional exclusions apply:

This insurance does not apply to "bodily injury" or "property damage" occurring after:

1. All work, including materials, parts or equipment furnished in connection with such work, on the project (other than service, maintenance or repairs) to be performed by or on behalf of the additional insured(s) at the location of the covered operations has been completed; or
2. That portion of "your work" out of which the injury or damage arises has been put to its intended use by any person or organization other than another contractor or subcontractor engaged in performing operations for a principal as a part of the same project.


© ISO Properties, Inc., 2004

**THIS ENDORSEMENT CHANGES THE POLICY. PLEASE READ IT CAREFULLY.**

# ADDITIONAL INSURED – OWNERS, LESSEES OR CONTRACTORS – COMPLETED OPERATIONS

This endorsement modifies insurance provided under the following:

COMMERCIAL GENERAL LIABILITY COVERAGE PART

**SCHEDULE**

| Name Of Additional Insured Person(s) Or Organization(s): | Location And Description Of Completed Operations |
|---|---|
| Any person or organization, you have agreed by means of a written contract or agreement, to add as an additional insured; such person or organization is an additional insured on this policy.<br><br>When required by a written contract or agreement, coverage afforded to these additional insured parties will be primary to and non-contributory with any other insurance available to that person or organization. | |
| Information required to complete this Schedule, if not shown above, will be shown in the Declarations. | |

**Section II – Who Is An Insured** is amended to include as an additional insured the person(s) or organization(s) shown in the Schedule, but only with respect to liability for "bodily injury" or "property damage" caused, in whole or in part, by "your work" at the location designated and described in the schedule of this endorsement performed for that additional insured and included in the "products-completed operations hazard".


© ISO Properties, Inc., 2004

# WAIVER OF TRANSFER OF RIGHTS OF RECOVERY AGAINST OTHERS TO US

This endorsement modifies insurance provided under the following:

COMMERCIAL GENERAL LIABILITY COVERAGE PART
PRODUCTS/COMPLETED OPERATIONS LIABILITY COVERAGE PART

**SCHEDULE**

| **Name Of Person Or Organization:** |
|---|
| WAIVER OF SUBROGATION APPLIES WHERE REQUIRED BY WRITTEN AGREEMENT WITH OUR NAMED INSURED AS LONG AS THE REQUEST OCCURS PRIOR TO A LOSS. |
| Information required to complete this Schedule, if not shown above, will be shown in the Declarations. |

The following is added to Paragraph **8. Transfer Of Rights Of Recovery Against Others To Us** of **Section IV – Conditions:**

We waive any right of recovery we may have against the person or organization shown in the Schedule above because of payments we make for injury or damage arising out of your ongoing operations or "your work" done under a contract with that person or organization and included in the "products-completed operations hazard". This waiver applies only to the person or organization shown in the Schedule above.


© Insurance Services Office, Inc., 2008

**THIS ENDORSEMENT CHANGES THE POLICY. PLEASE READ IT CAREFULLY.**

# DESIGNATED INSURED FOR COVERED AUTOS LIABILITY COVERAGE

This endorsement modifies insurance provided under the following:

AUTO DEALERS COVERAGE FORM
BUSINESS AUTO COVERAGE FORM
MOTOR CARRIER COVERAGE FORM

With respect to coverage provided by this endorsement, the provisions of the Coverage Form apply unless modified by this endorsement.

This endorsement identifies person(s) or organization(s) who are "insureds" for Covered Autos Liability Coverage under the Who Is An Insured provision of the Coverage Form. This endorsement does not alter coverage provided in the Coverage Form.

This endorsement changes the policy effective on the inception date of the policy unless another date is indicated below.

**Named Insured:** THE WALSH GROUP, LTD.

**Endorsement Effective Date:**

**SCHEDULE**

**Name Of Person(s) Or Organization(s):**

ANY PERSON OR ORGANIZATIONS, WHEN REQUIRED BY WRITTEN CONTRACT OR AGREEMENT, ARE AN ADDITIONAL INSURED.

THIS INSURANCE IS PRIMARY AND NON-CONTRIBUTORY AS RESPECTS TO THE PERSON OR ORGANIZATION.

Information required to complete this Schedule, if not shown above, will be shown in the Declarations.

Each person or organization shown in the Schedule is an "insured" for Covered Autos Liability Coverage, but only to the extent that person or organization qualifies as an "insured" under the Who Is An Insured provision contained in Paragraph **A.1.** of Section **II** – Covered Autos Liability Coverage in the Business Auto and Motor Carrier Coverage Forms and Paragraph **D.2.** of Section **I** – Covered Autos Coverages of the Auto Dealers Coverage Form.


© Insurance Services Office, Inc., 2011

## WAIVER OF OUR RIGHT TO RECOVER FROM OTHERS ENDORSEMENT

We have the right to recover our payments from anyone liable for an injury covered by this policy. We will not enforce our right against the person or organization named in the Schedule. (This agreement applies only to the extent that you perform work under a written contract that requires you to obtain this agreement from us.)

This agreement shall not operate directly or indirectly to benefit anyone not named in the Schedule.

Schedule

ANY PERSON OR ORGANIZATION WHERE WAIVER OF OUR RIGHT TO RECOVER IS REQUIRED BY WRITTEN CONTRACT OR AGREEMENT.

This endorsement changes the policy to which it is attached and is effective on the date issued unless otherwise stated.
**(The information below is required only when this endorsement is issued subsequent to preparation of the policy.)**

Endorsement Effective 06/01/2019 Policy No. 41WCI8910906 Endorsement No.
Insured WALSH CONSTRUCTION GROUP, LLC Premium INCL.
Insurance Company ARCH INSURANCE COMPANY

Countersigned By _____

© 1983 National Council on Compensation Insurance.

**THIS ENDORSEMENT CHANGES THE POLICY. PLEASE READ IT CAREFULLY.**

# WAIVER OF TRANSFER OF RIGHTS OF RECOVERY AGAINST OTHERS TO US (WAIVER OF SUBROGATION)

This endorsement modifies insurance provided under the following:

AUTO DEALERS COVERAGE FORM
BUSINESS AUTO COVERAGE FORM
MOTOR CARRIER COVERAGE FORM

With respect to coverage provided by this endorsement, the provisions of the Coverage Form apply unless modified by the endorsement.

This endorsement changes the policy effective on the inception date of the policy unless another date is indicated below.

**Named Insured:** THE WALSH GROUP, LTD.

**Endorsement Effective Date:**

**SCHEDULE**

**Name(s) Of Person(s) Or Organization(s):**
ANY PERSON OR ORGANIZATION THAT REQUIRES A WAIVER FROM THE NAMED INSURED VIA A WRITTEN CONTRACT PRIOR TO THE ACCIDENT OR LOSS.

Information required to complete this Schedule, if not shown above, will be shown in the Declarations.

The **Transfer Of Rights Of Recovery Against Others To Us** condition does not apply to the person(s) or organization(s) shown in the Schedule, but only to the extent that subrogation is waived prior to the "accident" or the "loss" under a contract with that person or organization.


© Insurance Services Office, Inc., 2011

## THIS ENDORSEMENT CHANGES THE POLICY. PLEASE READ IT CAREFULLY.

## NOTICE OF CANCELLATION – CERTIFICATE HOLDERS (SPECIFIED DAYS)

The person(s) or organization(s) listed or described in the Schedule below have requested that they receive written notice of cancellation when this policy is cancelled by us. We will mail or deliver to the Person(s) or Organization(s) listed or described in the Schedule a copy of the written notice of cancellation that we sent to you. If possible, such copies of the notice will be mailed at least 60 days, except for cancellation for non-payment of premium which will be mailed 10 days, prior to the effective date of the cancellation, to the address or addresses of certificate holders as provided by your broker or agent.

**Schedule**

Person(s) or Organization(s) including mailing address:

All certificate holders where written notice of the cancellation of this policy is required by written contract, permit or agreement with the Named Insured and whose names and addresses will be provided by the broker or agent listed in the Declarations Page of this policy for the purposes of complying with such request.

This notification of cancellation of the policy is intended as a courtesy only. Our failure to provide such notification to the person(s) or organization(s) shown in the Schedule will not extend any policy cancellation date nor impact or negate any cancellation of the policy. This endorsement does not entitle the person(s) or organization(s) listed or described in the Schedule above to any benefit, rights or protection under this policy.

Any provision of this endorsement that is in conflict with a statute or rule is hereby amended to conform to that statute or rule.

All other terms and conditions of this policy remain unchanged.
Endorsement Number:

Policy Number: 41PKG8901913

Named Insured: THE WALSH GROUP, LTD

This endorsement is effective on the inception date of this Policy unless otherwise stated herein:

Endorsement Effective Date: 06-01-19

## THIS ENDORSEMENT CHANGES THE POLICY. PLEASE READ IT CAREFULLY.

## NOTICE OF CANCELLATION/NONRENEWAL – CERTIFICATE HOLDERS (SPECIFIED DAYS)

The person(s) or organization(s) listed or described in the Schedule below have requested that they receive written notice of cancellation or non-renewal when this policy is cancelled by us. We will mail or deliver to the Person(s) or Organization(s) listed or described in the Schedule a copy of the written notice of cancellation or non-renewal that we sent to you. If possible, such copies of the notice will be mailed at least 60 days, except for cancellation for non-payment of premium which will be mailed 10 days, prior to the effective date of the cancellation or non-renewal, to the address or addresses of certificate holders as provided by your broker or agent.

**Schedule**

Person(s) or Organization(s) including mailing address:

> All certificate holders where written notice of cancellation/non-renewal of this policy is required by written contract, permit or agreement with the Named Insured and whose names and addresses will be provided by the broker or agent listed in the Declarations Page of this policy for the purposes of complying with such request.

This notification of cancellation/non-renewal of the policy is intended as a courtesy only. Our failure to provide such notification to the person(s) or organization(s) shown in the Schedule will not extend any policy cancellation or non-renewal date nor impact or negate any cancellation or non-renewal of the policy. This endorsement does not entitle the person(s) or organization(s) listed or described in the Schedule above to any benefit, rights or protection under this policy.

Any provision of this endorsement that is in conflict with a statute or rule is hereby amended to conform to that statute or rule.

All other terms and conditions of this policy remain unchanged.

Issued By: ARCH INSURANCE COMPANY

Endorsement Number:

Policy Number: 41WCI8910906

Named Insured: WALSH CONSTRUCTION GROUP, LLC

Endorsement Effective Date: 06-01-2019

[redacted]

President


Includes copyright material of Insurance Services Office, Inc with its permission

**THIS ENDORSEMENT CHANGES THE POLICY. PLEASE READ IT CAREFULLY.**

# ADDITIONAL INSURED – DESIGNATED PERSON OR ORGANIZATION

This endorsement modifies insurance provided under the following:

COMMERCIAL GENERAL LIABILITY COVERAGE PART

**SCHEDULE**

| Name Of Additional Insured Person(s) Or Organization(s) |
|---|
| ANY PERSON OR ORGANIZATION, YOU HAVE AGREED BY MEANS OF A WRITTEN CONTRACT OR AGREEMENT, TO ADD AS AN ADDITIONAL INSURED; SUCH PERSON OR ORGANIZATION IS AN ADDITIONAL INSURED ON THIS POLICY.<br><br>WHEN REQUIRED BY A WRITTEN CONTRACT OR AGREEMENT, COVERAGE AFFORDED TO THESE ADDITIONAL INSURED PARTIES WILL BE PRIMARY TO AND NON-CONTRIBUTORY WITH ANY OTHER INSURANCE AVAILABLE TO THAT PERSON OR ORGANIZATION. |
| Information required to complete this Schedule, if not shown above, will be shown in the Declarations. |

**Section II – Who Is An Insured** is amended to include as an additional insured the person(s) or organization(s) shown in the Schedule, but only with respect to liability for "bodily injury", "property damage" or "personal and advertising injury" caused, in whole or in part, by your acts or omissions or the acts or omissions of those acting on your behalf:

**A.** In the performance of your ongoing operations; or

**B.** In connection with your premises owned by or rented to you.


© ISO Properties, Inc., 2004

## LONGSHORE AND HARBOR WORKERS' COMPENSATION ACT COVERAGE ENDORSEMENT

This endorsement applies only to work subject to the Longshore and Harbor Workers' Compensation Act in a state shown in the Schedule. The policy applies to that work as though that state were listed in Item 3.A. of the Information Page.

General Section C. **Workers' Compensation Law** is replaced by the following:

C. **Workers' Compensation Law**

Workers' Compensation Law means the workers or workmen's compensation law and occupational disease law of each state or territory named in Item 3.A. of the Information Page and the Longshore and Harbor Workers' Compensation Act (33 USC Sections 901–950). It includes any amendments to those laws that are in effect during the policy period. It does not include any other federal workers or workmen's compensation law, other federal occupational disease law or the provisions of any law that provide nonoccupational disability benefits.

Part Two (Employers Liability Insurance), C. Exclusions., exclusion 8, does not apply to work subject to the Longshore and Harbor Workers' Compensation Act.

This endorsement does not apply to work subject to the Defense Base Act, the Outer Continental Shelf Lands Act, or the Nonappropriated Fund Instrumentalities Act.

Schedule

| State | Longshore and Harbor Workers' Compensation Act Coverage Percentage |
|---|---|
| AK | 35% |
| AL | 111% |
| AR | 64% |
| AZ | 12% |
| CO | 38% |
| CT | 27% |
| DC | 4% |
| DE | 105.34% |
| FL | 94% |

The rates for classifications with code numbers not followed by the letter "F" are rates for work not ordinarily subject to the Longshore and Harbor Workers' Compensation Act. If this policy covers work under such classifications, and if the work is subject to the Longshore and Harbor Workers' Compensation Act, those non-F classification rates will be increased by the Longshore and Harbor Workers' Compensation Act Coverage Percentage shown in the Schedule.


© 1983, 1991 National Council on Compensation Insurance.

## LONGSHORE AND HARBOR WORKERS' COMPENSATION ACT COVERAGE ENDORSEMENT

This endorsement applies only to work subject to the Longshore and Harbor Workers' Compensation Act in a state shown in the Schedule. The policy applies to that work as though that state were listed in Item 3.A. of the Information Page.

General Section C. **Workers' Compensation Law** is replaced by the following:

C. **Workers' Compensation Law**

Workers' Compensation Law means the workers or workmen's compensation law and occupational disease law of each state or territory named in Item 3.A. of the Information Page and the Longshore and Harbor Workers' Compensation Act (33 USC Sections 901–950). It includes any amendments to those laws that are in effect during the policy period. It does not include any other federal workers or workmen's compensation law, other federal occupational disease law or the provisions of any law that provide nonoccupational disability benefits.

Part Two (Employers Liability Insurance), C. Exclusions., exclusion 8, does not apply to work subject to the Longshore and Harbor Workers' Compensation Act.

This endorsement does not apply to work subject to the Defense Base Act, the Outer Continental Shelf Lands Act, or the Nonappropriated Fund Instrumentalities Act.

Schedule

| State | Longshore and Harbor Workers' Compensation Act Coverage Percentage |
|---|---|
| GA | 43% |
| HI | 27% |
| IA | 108% |
| ID | 17% |
| IL | 28% |
| IN | 60% |
| KS | 54% |
| LA | 106% |
| MA | 23.1% |

The rates for classifications with code numbers not followed by the letter "F" are rates for work not ordinarily subject to the Longshore and Harbor Workers' Compensation Act. If this policy covers work under such classifications, and if the work is subject to the Longshore and Harbor Workers' Compensation Act, those non-F classification rates will be increased by the Longshore and Harbor Workers' Compensation Act Coverage Percentage shown in the Schedule.


© 1983, 1991 National Council on Compensation Insurance.

## LONGSHORE AND HARBOR WORKERS' COMPENSATION ACT COVERAGE ENDORSEMENT

This endorsement applies only to work subject to the Longshore and Harbor Workers' Compensation Act in a state shown in the Schedule. The policy applies to that work as though that state were listed in Item 3.A. of the Information Page.

General Section C. **Workers' Compensation Law** is replaced by the following:

C. **Workers' Compensation Law**

Workers' Compensation Law means the workers or workmen's compensation law and occupational disease law of each state or territory named in Item 3.A. of the Information Page and the Longshore and Harbor Workers' Compensation Act (33 USC Sections 901–950). It includes any amendments to those laws that are in effect during the policy period. It does not include any other federal workers or workmen's compensation law, other federal occupational disease law or the provisions of any law that provide nonoccupational disability benefits.

Part Two (Employers Liability Insurance), C. Exclusions., exclusion 8, does not apply to work subject to the Longshore and Harbor Workers' Compensation Act.

This endorsement does not apply to work subject to the Defense Base Act, the Outer Continental Shelf Lands Act, or the Nonappropriated Fund Instrumentalities Act.

Schedule

| State | Longshore and Harbor Workers' Compensation Act Coverage Percentage |
|---|---|
| MD | 44% |
| ME | 30% |
| MI | 68% |
| MS | 83% |
| MT | 118% |
| NC | 92% |
| NE | 77% |
| NH | 107% |
| NJ | 50% |

The rates for classifications with code numbers not followed by the letter "F" are rates for work not ordinarily subject to the Longshore and Harbor Workers' Compensation Act. If this policy covers work under such classifications, and if the work is subject to the Longshore and Harbor Workers' Compensation Act, those non-F classification rates will be increased by the Longshore and Harbor Workers' Compensation Act Coverage Percentage shown in the Schedule.


© 1983, 1991 National Council on Compensation Insurance.

## LONGSHORE AND HARBOR WORKERS' COMPENSATION ACT COVERAGE ENDORSEMENT

This endorsement applies only to work subject to the Longshore and Harbor Workers' Compensation Act in a state shown in the Schedule. The policy applies to that work as though that state were listed in Item 3.A. of the Information Page.

General Section C. **Workers' Compensation Law** is replaced by the following:

C. **Workers' Compensation Law**

Workers' Compensation Law means the workers or workmen's compensation law and occupational disease law of each state or territory named in Item 3.A. of the Information Page and the Longshore and Harbor Workers' Compensation Act (33 USC Sections 901–950). It includes any amendments to those laws that are in effect during the policy period. It does not include any other federal workers or workmen's compensation law, other federal occupational disease law or the provisions of any law that provide nonoccupational disability benefits.

Part Two (Employers Liability Insurance), C. Exclusions., exclusion 8, does not apply to work subject to the Longshore and Harbor Workers' Compensation Act.

This endorsement does not apply to work subject to the Defense Base Act, the Outer Continental Shelf Lands Act, or the Nonappropriated Fund Instrumentalities Act.

Schedule

| State | Longshore and Harbor Workers' Compensation Act Coverage Percentage |
|---|---|
| NM | 63% |
| NV | 12% |
| NY | 61.1% |
| OK | 89% |
| PA | 60.68% |
| RI | 60% |
| SC | 66% |
| SD | 44% |
| TN | 147% |

The rates for classifications with code numbers not followed by the letter "F" are rates for work not ordinarily subject to the Longshore and Harbor Workers' Compensation Act. If this policy covers work under such classifications, and if the work is subject to the Longshore and Harbor Workers' Compensation Act, those non-F classification rates will be increased by the Longshore and Harbor Workers' Compensation Act Coverage Percentage shown in the Schedule.


© 1983, 1991 National Council on Compensation Insurance.

POLICY NUMBER: 41WCI8901713

## LONGSHORE AND HARBOR WORKERS' COMPENSATION ACT COVERAGE ENDORSEMENT

This endorsement applies only to work subject to the Longshore and Harbor Workers' Compensation Act in a state shown in the Schedule. The policy applies to that work as though that state were listed in Item 3.A. of the Information Page.

General Section C. **Workers' Compensation Law** is replaced by the following:

C. **Workers' Compensation Law**

Workers' Compensation Law means the workers or workmen's compensation law and occupational disease law of each state or territory named in Item 3.A. of the Information Page and the Longshore and Harbor Workers' Compensation Act (33 USC Sections 901–950). It includes any amendments to those laws that are in effect during the policy period. It does not include any other federal workers or workmen's compensation law, other federal occupational disease law or the provisions of any law that provide nonoccupational disability benefits.

Part Two (Employers Liability Insurance), C. Exclusions., exclusion 8, does not apply to work subject to the Longshore and Harbor Workers' Compensation Act.

This endorsement does not apply to work subject to the Defense Base Act, the Outer Continental Shelf Lands Act, or the Nonappropriated Fund Instrumentalities Act.

Schedule

| State | Longshore and Harbor Workers' Compensation Act Coverage Percentage |
|---|---|
| UT | 57% |
| VA | 72% |
| VT | 19% |
| WI | 59% |
| WV | 77% |
| PR | TBD |
| ALL OTHER STATES | VARIES BY STATE |

The rates for classifications with code numbers not followed by the letter "F" are rates for work not ordinarily subject to the Longshore and Harbor Workers' Compensation Act. If this policy covers work under such classifications, and if the work is subject to the Longshore and Harbor Workers' Compensation Act, those non-F classification rates will be increased by the Longshore and Harbor Workers' Compensation Act Coverage Percentage shown in the Schedule.

This endorsement changes the policy to which it is attached and is effective on the date issued unless otherwise stated.
**(The information below is required only when this endorsement is issued subsequent to preparation of the policy.)**

Endorsement Effective 06-01-19 Policy No. 41WCI8901713 Endorsement No.

Insured THE WALSH GROUP, LTD Premium INCL.

Insurance Company ARCH INSURANCE COMPANY

Countersigned By _____

DATE OF ISSUE: 06-07-18



© 1983, 1991 National Council on Compensation Insurance.

**THIS ENDORSEMENT CHANGES THE POLICY. PLEASE READ IT CAREFULLY.**

# ADDITIONAL INSURED – ENGINEERS, ARCHITECTS OR SURVEYORS NOT ENGAGED BY THE NAMED INSURED

This endorsement modifies insurance provided under the following:

COMMERCIAL GENERAL LIABILITY COVERAGE PART

**SCHEDULE**

| **Name Of Additional Insured Engineers, Architects Or Surveyors Not Engaged By The Named Insured:** |
|---|
| ANY PERSON OR ORGANIZATION, YOU HAVE AGREED BY MEANS OF A WRITTEN CONTRACT OR AGREEMENT, TO ADD AS AN ADDITIONAL INSURED; SUCH PERSON OR ORGANIZATION IS AN ADDITIONAL INSURED ON THIS POLICY.<br><br>WHEN REQUIRED BY A WRITTEN CONTRACT OR AGREEMENT, COVERAGE AFFORDED TO THESE ADDITIONAL INSURED PARTIES WILL BE PRIMARY TO AND NON-CONTRIBUTORY WITH ANY OTHER INSURANCE AVAILABLE TO THAT PERSON OR ORGANIZATION. |
| Information required to complete this Schedule, if not shown above, will be shown in the Declarations. |

**A.** **Section II – Who Is An Insured** is amended to include as an additional insured the architects, engineers or surveyors shown in the Schedule, but only with respect to liability for "bodily injury", "property damage" or "personal and advertising injury" caused, in whole or in part, by:

1. Your acts or omissions; or
2. The acts or omissions of those acting on your behalf;

in the performance of your ongoing operations performed by you or on your behalf.

Such architects, engineers or surveyors, while not engaged by you, are contractually required to be added as an additional insured to your policy.

**B.** With respect to the insurance afforded to these additional insureds, the following additional exclusion applies:

This insurance does not apply to "bodily injury", "property damage" or "personal and advertising injury" arising out of the rendering of or the failure to render any professional services, including:

1. The preparing, approving, or failing to prepare or approve maps, drawings, opinions, reports, surveys, change orders, designs or specifications; or
2. Supervisory, inspection or engineering services.


© ISO Properties, Inc., 2004

**THIS ENDORSEMENT CHANGES THE POLICY. PLEASE READ IT CAREFULLY.**

# CONTRACTUAL LIABILITY - RAILROADS

This endorsement modifies insurance provided under the following:

COMMERCIAL GENERAL LIABILITY COVERAGE PART

**SCHEDULE**

| Scheduled Railroad: | Designated Job Site: |
|---|---|
| ANY RAILROAD ORGANIZATION WHOM HAS GRANTED YOU AN EASEMENT FOR ANY JOB SITE TO PERMIT YOU TO PERFORM WORK AS A RESULT OF ANY CONTRACT OR AGREEMENT YOU HAVE ENTERED INTO. | |

(If no entry appears above, information required to complete this endorsement will be shown in the Declarations as applicable to this endorsement.)

With respect to operations performed for, or affecting, a Scheduled Railroad at a Designated Job Site, the definition of "insured contract" in the Definitions section is replaced by the following:

9. "Insured Contract" means:

   a. A contract for a lease of premises. However, that portion of the contract for a lease of premises that indemnifies any person or organization for damage by fire to premises while rented to you or temporarily occupied by you with permission of the owner is not an "insured contract";

   b. A sidetrack agreement;

   c. Any easement or license agreement;

   d. An obligation, as required by ordinance, to indemnify a municipality, except in connection with work for a municipality;

   e. An elevator maintenance agreement;

   f. That part of any other contract or agreement pertaining to your business (including an indemnification of a municipality in connection with work performed for a municipality) under which you assume the tort liability of another party to pay for "bodily injury" or "property damage" to a third person or organization. Tort liability means a liability that would be imposed by law in the absence of any contract or agreement.

Paragraph **f.** does not include that part of any contract or agreement:

(1) That indemnifies an architect, engineer or surveyor for injury or damage arising out of:

   (a) Preparing, approving or failing to prepare or approve maps, shop drawings, opinions, reports, surveys, field orders, change orders or drawings and specifications; or

   (b) Giving directions or instructions, or failing to give them, if that is the primary cause of the injury or damage;

(2) Under which the insured, if an architect, engineer or surveyor, assumes liability for an injury or damage arising out of the insured's rendering or failure to render professional services, including those listed in Paragraph (1) above and supervisory, inspection, architectural or engineering activities.


© ISO Properties, Inc., 2000

The ACORD name and logo are registered marks of ACORD

ACORD

# EVIDENCE OF PROPERTY INSURANCE

DATE (MM/DD/YYYY) 08/5/2019

**THIS EVIDENCE OF PROPERTY INSURANCE IS ISSUED AS A MATTER OF INFORMATION ONLY AND CONFERS NO RIGHTS UPON THE ADDITIONAL INTEREST NAMED BELOW. THIS EVIDENCE DOES NOT AFFIRMATIVELY OR NEGATIVELY AMEND, EXTEND OR ALTER THE COVERAGE AFFORDED BY THE POLICIES BELOW. THIS EVIDENCE OF INSURANCE DOES NOT CONSTITUTE A CONTRACT BETWEEN THE ISSUING INSURER(S), AUTHORIZED REPRESENTATIVE OR PRODUCER, AND THE ADDITIONAL INTEREST.**

AGENCY
Aon Risk Services Central, Inc.
Chicago IL Office
200 E. Randolph
Chicago, IL 60601

PHONE (A/C, No, Ext): (312-381-4626)
FAX (A/C, No): (312-381-0147)
E-MAIL ADDRESS:
CODE:
SUB CODE:
AGENCY CUSTOMER ID #:

COMPANY
Ace American Insurance Company

INSURED
Walsh Construction Company II, LLC; The Illinois State Toll Highway Authority and All Subcontractors of Every Tier to their extent of their insurable interest in the work and pre-existing structures.
929 West Adams Street
Chicago, IL 60607 USA

LOAN NUMBER

POLICY NUMBER: I11159850001B - 2

EFFECTIVE DATE: 08/01/2019
EXPIRATION DATE: 07-20-2022
☐ CONTINUED UNTIL TERMINATED IF CHECKED

THIS REPLACES PRIOR EVIDENCE DATED:

## PROPERTY INFORMATION

LOCATION/DESCRIPTION

Project: Tollway Contract RR– #1-18-4428 –BNSF Bridge Rehab Over I-294 / Job #219091

Location: (BN-261) – Burlington Northern Santa Fe Railway (BNSF) over the Tri State Tollway (I-294) Mile Post 26.6

THE POLICIES OF INSURANCE LISTED BELOW HAVE BEEN ISSUED TO THE INSURED NAMED ABOVE FOR THE POLICY PERIOD INDICATED. NOTWITHSTANDING ANY REQUIREMENT, TERM OR CONDITION OF ANY CONTRACT OR OTHER DOCUMENT WITH RESPECT TO WHICH THIS EVIDENCE OF PROPERTY INSURANCE MAY BE ISSUED OR MAY PERTAIN, THE INSURANCE AFFORDED BY THE POLICIES DESCRIBED HEREIN IS SUBJECT TO ALL THE TERMS, EXCLUSIONS AND CONDITIONS OF SUCH POLICIES. LIMITS SHOWN MAY HAVE BEEN REDUCED BY PAID CLAIMS.

## COVERAGE INFORMATION

| COVERAGE / PERILS / FORMS | AMOUNT OF INSURANCE | DEDUCTIBLE |
|---|---|---|
| Builders Risk Coverage Per Location | $77,307,870 | Per Policy No. I111359850001 |

## REMARKS (Including Special Conditions)

## CANCELLATION

**SHOULD ANY OF THE ABOVE DESCRIBED POLICIES BE CANCELLED BEFORE THE EXPIRATION DATE THEREOF, NOTICE WILL BE DELIVERED IN ACCORDANCE WITH THE POLICY PROVISIONS.**

## ADDITIONAL INTEREST

NAME AND ADDRESS
The Illinois State Toll Highway Authority
Attention: Risk Management
2700 Ogden Avenue
Downers Grove, IL 60515

☐ MORTGAGEE
☐ LOSS PAYEE
☒ ADDITIONAL INSURED Certificate Holder

LOAN #

AUTHORIZED [redacted]


© 1993-2009 ACORD CORPORATION. All rights reserved.

*Aon Risk Services Central, Inc.*
*Illinois Division*

July 22, 2019

Chrissy Rivers
Illinois Tollway PMO
Engineering Services
2700 Ogden Avenue
Downers Grove, IL 60515

Overnight Mail

Dear Ms. Rivers,

**Re:** Tollway Contract No. I-18-4428 / (BN 261) - Burlington Northern Santa Fe Railway (BNSF) over the Tri-State Tollway (I-294) / Mile Post 26.6 / Bridge Reconstruction / Job No. 219091 / Builder's Risk Master Policy #I11159850001 – Endt. 2
**Contractor:** Walsh Construction Company II, LLC

Attached find Builders Risk Endorsement for No. 2 for the above captioned policy, along with the Builder's Risk Certificate and the Brokers Insurance Letter for the captioned project.

Please review and let us know if you have questions or concerns.

Sincerely,

[redacted]

Rick Subak, CPCU, ARM, CRIS
Senior Vice President / Strategic Account Manager
Aon Risk Services Central, Inc.| Construction Services Group
200 East Randolph Street | Chicago, Illinois 60601
t +1.312.381.4380
rick.subak@aon.com

# *New Project Declaration*

CHUBB

## *Endorsement Number: 2*

| SYM: | Policy ID: **111159850-001B** | Company: **ACE American Insurance Company** |
|---|---|---|

| | |
|---|---|
| Named Insured: **Walsh Construction Company II, LLC; The Illinois State Toll Highway and Subcontractors of All Tiers to the extent of their insurable in the work and pre-existing structure(s).** | Effective Date of This Endorsement: **8/1/19** |

**In return for the payment of premium of $228,153. and subject to all the terms of this policy, we agree to provide the insurance for the Project described below. Coverage provided by this endorsement is subject to all of the terms and conditions of the Policy. The Limit(s) of liability stated below apply only to the project covered by this endorsement and shall not increase the limits of liability, aggregate limits of liability or sublimits of this policy. Notwithstanding the foregoing, this Endorsement neither affirmatively, nor negatively amends, extends or alters the coverage, terms or conditions of the policy unless expressly stated herein.**

| | | |
|---|---|---|
| **I. Description of Insured Project** | **The Insured Project Name and Job Number:** | **Tollway Contract RR I-18-4428 – BNSF Bridge Rehab Over I-294<br>Job #219091** |
| | **The Insured Project Location:** | **(BN 261) – Burlington Northern Santa Fe Railway (BNSF) over the Tri-State Tollway (I-294) Mile Post 26.6** |
| | **The Insured Project Description:** | **The work under this contract includes Bridge rehabilitation, replacement of structure carrying BNSF Railroad over the Tri-State Tollway, shoulder reconstruction and widening, drainage system improvements, electrical and landscaping work.** |
| | **The Anticipated Date of Completion is:** | **7/20/22** |
| | **The Estimated Completed Value is:** | **$77,307,870** |
| | **Annual Rate per $100:<br>Term Rate per $100:** | **$.0960<br>$.2851 plus flat charge of $.01 for Waiver of Subrogation** |
| **II. Limits of Insurance** | **The most we will pay for all loss resulting from all covered causes of loss to this Project in any one Occurrence is $77,307,870** | |
| **III. Waiver of Rights of Recovery Against Architects or Engineers** | ACE 0219, part F General Conditions, sub part 7. Subrogation, is amended to read as follows:<br><br>If the Company pays a claim under this Policy, it will be subrogated, to the extent of such payment, to all the Insured's rights of recovery from other persons, organizations and entities. The Insured will execute and deliver instruments and papers and do whatever else is necessary to secure such rights.<br><br>The Company will have no rights of subrogation against:<br><br>A: any person or entity, which is an Additional Insured; | |

| | |
|---|---|
| | B. Architects or engineers;<br>C: any other person or entity, against which the Insured has waived its rights of subrogation in writing before the time of loss.<br><br>Notwithstanding the foregoing, it is a condition of this policy that the Company shall be subrogated to all the Insured's rights of recovery against:<br><br>A. any manufacturer or supplier of machinery, equipment or other property, whether named as an Insured or not, for the cost of making good any loss or damage which said party has agreed to make good under a guarantee or warranty, whether expressed or implied.<br><br>The Insured will act in concert with the Company and all other interests concerned in the exercise of such rights of recovery.<br><br>If any amount is recovered as a result of such proceedings, the net amount recovered after deducting the costs of recovery, will accrue first to the Company in proportion to their respective interests. Any excess of this amount will be remitted to the Insured. If there is no recovery, the interests instituting the proceedings will bear the expense of the proceedings proportionately.<br><br>The Insured will do nothing after loss to prejudice such rights of subrogation. |

| | | | |
|---|---|---|---|
| **IV. Lenders Loss Payee(s)** | | | *Interest in Covered Property* |
| | | | |
| | | | |
| **V. Additional Insured (s)** | | The Illinois State Toll Highway Authority<br>2700 Ogden Avenue<br>Downers Grove, IL 60515 | *Interest in Covered Property* |
| | | | |
| | | | |

[redacted]

**SPM 7-17-2019**

*Aon Risk Services Central, Inc.*
*Illinois Division*

August 5, 2019

To Whom It May Concern

**Re:** Illinois State Toll Highway Authority
**Project Name:** Tollway Contract No. I-18-4428 / (BN 261) - Burlington Northern Santa Fe Railway (BNSF) over the Tri-State Tollway (I-294) / Mile Post 26.6 / Bridge Reconstruction / Job No. 219091.
**Contractor:** Walsh Construction Company II, LLC

Aon Risk Services Central, Inc. Illinois Division is the insurance broker for Walsh Construction Company II, LLC.

We are attesting that:

1. All provisions of the accepted certificates of insurance and policy confirmations/binders have been obtained, and,
2. All endorsements indicated have been secured from the insurance carrier(s).

Aon Risk Services Central, Inc. is an insurance broker for the insurance carrier.

Please contact our office with any questions.

Sincerely,

[redacted]

Rick Subak, CPCU, ARM, CRIS
Senior Vice President / Strategic Account Manager
Aon Risk Services Central, Inc.| Construction Services Group
200 East Randolph Street | Chicago, Illinois 60601
t +1.312.381.4380
rick.subak@aon.com

DBE/WBE/FBE certified

07/29/19

Brian Fidoruk
WALSH CONSTRUCTION
929 West Adams Street
Chicago, Illinois 60607

Re: ISTHA CONTRACT NO: I-18-4428
Professional Liability Insurance

Mr. Fidoruk,

This letter is to confirm that Alpine Demolition Services LLC warrants that its Engineering Professional Liability insurance for the pay items "50100300 – Removal of Existing Structures No. 1 and 50100400 – Removal of Existing Structures No. 2" shall be maintained continuously for a period of not less than five years after the above referenced project is complete.

Please let me know if there are any other questions.

Regards,

[redacted]

Karsten Pawlik
VP Operations

ACORD®

# CERTIFICATE OF LIABILITY INSURANCE

DATE (MM/DD/YYYY): 8/6/2019

THIS CERTIFICATE IS ISSUED AS A MATTER OF INFORMATION ONLY AND CONFERS NO RIGHTS UPON THE CERTIFICATE HOLDER. THIS CERTIFICATE DOES NOT AFFIRMATIVELY OR NEGATIVELY AMEND, EXTEND OR ALTER THE COVERAGE AFFORDED BY THE POLICIES BELOW. THIS CERTIFICATE OF INSURANCE DOES NOT CONSTITUTE A CONTRACT BETWEEN THE ISSUING INSURER(S), AUTHORIZED REPRESENTATIVE OR PRODUCER, AND THE CERTIFICATE HOLDER.

**IMPORTANT:** If the certificate holder is an ADDITIONAL INSURED, the policy(ies) must have ADDITIONAL INSURED provisions or be endorsed. If SUBROGATION IS WAIVED, subject to the terms and conditions of the policy, certain policies may require an endorsement. A statement on this certificate does not confer rights to the certificate holder in lieu of such endorsement(s).

**PRODUCER**
HUB International Midwest Limited
1411 Opus Place, Suite 450
Downers Grove IL 60515

**CONTACT NAME:**
**PHONE (A/C, No, Ext):** 630-468-5600 **FAX (A/C, No):** 630-468-5696
**E-MAIL ADDRESS:** CSUConstruction@hubinternational.com

| INSURER(S) AFFORDING COVERAGE | NAIC # |
|---|---|
| INSURER A : National Union Fire Insurance Company of Pittsburg | 19445 |
| INSURER B : Travelers Property Casualty Company of America | 25674 |
| INSURER C : Allied World Assurance Co Inc | 19489 |
| INSURER D : | |
| INSURER E : | |
| INSURER F : | |

**INSURED** ALPIDEM-02
Alpine Demolition Services LLC
3515 Stern Avenue
Saint Charles IL 60174

**COVERAGES** **CERTIFICATE NUMBER:** 1042223680 **REVISION NUMBER:**

THIS IS TO CERTIFY THAT THE POLICIES OF INSURANCE LISTED BELOW HAVE BEEN ISSUED TO THE INSURED NAMED ABOVE FOR THE POLICY PERIOD INDICATED. NOTWITHSTANDING ANY REQUIREMENT, TERM OR CONDITION OF ANY CONTRACT OR OTHER DOCUMENT WITH RESPECT TO WHICH THIS CERTIFICATE MAY BE ISSUED OR MAY PERTAIN, THE INSURANCE AFFORDED BY THE POLICIES DESCRIBED HEREIN IS SUBJECT TO ALL THE TERMS, EXCLUSIONS AND CONDITIONS OF SUCH POLICIES. LIMITS SHOWN MAY HAVE BEEN REDUCED BY PAID CLAIMS.

| INSR LTR | TYPE OF INSURANCE | ADDL INSD | SUBR WVD | POLICY NUMBER | POLICY EFF (MM/DD/YYYY) | POLICY EXP (MM/DD/YYYY) | LIMITS | |
|---|---|---|---|---|---|---|---|---|
| A | X COMMERCIAL GENERAL LIABILITY<br>CLAIMS-MADE X OCCUR<br>X XCU Cov.Included<br>GEN'L AGGREGATE LIMIT APPLIES PER:<br>POLICY X PRO-JECT LOC<br>OTHER: | Y | Y | 5342022 | 6/1/2019 | 6/1/2020 | EACH OCCURRENCE<br>DAMAGE TO RENTED PREMISES (Ea occurrence)<br>MED EXP (Any one person)<br>PERSONAL & ADV INJURY<br>GENERAL AGGREGATE<br>PRODUCTS - COMP/OP AGG | $ 1,000,000<br>$ 300,000<br>$ 10,000<br>$ 1,000,000<br>$ 2,000,000<br>$ 2,000,000<br>$ |
| A | AUTOMOBILE LIABILITY<br>X ANY AUTO<br>OWNED AUTOS ONLY<br>X HIRED AUTOS ONLY<br>SCHEDULED AUTOS<br>X NON-OWNED AUTOS ONLY | Y | Y | 4773677 | 6/1/2019 | 6/1/2020 | COMBINED SINGLE LIMIT (Ea accident)<br>BODILY INJURY (Per person)<br>BODILY INJURY (Per accident)<br>PROPERTY DAMAGE (Per accident) | $ 1,000,000<br>$<br>$<br>$<br>$ |
| B | X UMBRELLA LIAB X OCCUR<br>EXCESS LIAB CLAIMS-MADE<br>DED X RETENTION $ 10,000 | | | ZUP13S9135819NF | 6/1/2019 | 6/1/2020 | EACH OCCURRENCE<br>AGGREGATE | $ 10,000,000<br>$ 10,000,000<br>$ |
| A | WORKERS COMPENSATION AND EMPLOYERS' LIABILITY<br>ANYPROPRIETOR/PARTNER/EXECUTIVE OFFICER/MEMBER EXCLUDED? Y/N N<br>(Mandatory in NH)<br>If yes, describe under DESCRIPTION OF OPERATIONS below | N/A | Y | 025893645 | 6/1/2019 | 6/1/2020 | X PER STATUTE OTH-ER<br>E.L. EACH ACCIDENT<br>E.L. DISEASE - EA EMPLOYEE<br>E.L. DISEASE - POLICY LIMIT | <br>$ 1,000,000<br>$ 1,000,000<br>$ 1,000,000 |
| C<br>C<br>B | Pollution Liability (Mold Incl.)<br>Professional Liability<br>Inland Marine | | | 0311-3476<br>0311-3476<br>QT6606B265495-TIL-19 | 6/1/2019<br>6/1/2019<br>6/1/2019 | 6/1/2020<br>6/1/2020<br>6/1/2020 | Limit: Occ./Agg.<br>Limit: Per Claim/Agg.<br>L&R Limit/Deductible: | $5MM / $5MM<br>$2MM / $2MM<br>$600,000 / $1,000 |

**DESCRIPTION OF OPERATIONS / LOCATIONS / VEHICLES (ACORD 101, Additional Remarks Schedule, may be attached if more space is required)**
RE: ISTHA Contract# I-18-4428; Bridge Reconstruction (BN 261) over Tri-State Tollway (I-294) Mile Post 26.6 - 50100300: REMOVAL OF EXISTING STRUCTURES NO. 1 & 50100400: REMOVAL OF EXISTING STRUCTURES NO. 2
The Illinois State Toll Highway Authority together with its officials, directors and employees; Walsh Construction Company II, LLC; Village of Hinsdale; Village of Western Springs; Western Springs Park District; and Burlington Northern Santa Fe (BNSF) Railway are included as additional insured's under General Liability, Automobile Liability & Pollution Liability, on a primary and non-contributory basis, when agreed in a written contract, subject to policy terms, conditions and exclusions. A waiver of subrogation applies under General Liability, Automobile Liability, & Worker's Compensation in favor of the additional insureds listed, when agreed in a written contract, subject to policy terms, conditions and exclusions. Umbrella follows form.

**CERTIFICATE HOLDER**

Illinois State Toll Highway Authority
2700 Ogden Avenue
Downers Grove IL 60515

**CANCELLATION**

SHOULD ANY OF THE ABOVE DESCRIBED POLICIES BE CANCELLED BEFORE THE EXPIRATION DATE THEREOF, NOTICE WILL BE DELIVERED IN ACCORDANCE WITH THE POLICY PROVISIONS.

**AUTHORIZED REPRESENTATIVE**
[redacted]

© 1988-2015 ACORD CORPORATION. All rights reserved.

ENDORSEMENT

This endorsement, effective 06/01/2019 12:01 A.M. forms a part of

policy No. 5342022 issued to Alpine Demolition Services, LLC

By National Union Fire Insurance Company

THIS ENDORSEMENT CHANGES THE POLICY. PLEASE READ IT CAREFULLY.

## ADDITIONAL INSURED- OWNERS, LESSEES, OR CONTRACTORS - COMPLETED OPERATIONS

*This endorsement modifies insurance provided under the following:*

COMMERCIAL GENERAL LIABILITY COVERAGE FORM

SCHEDULE

NAME OF ADDITIONAL INSURED PERSON OR ORGANIZATION:

"Any person or organization whom you become obligated to include as an additional insured as a result of any contract or agreement you have entered into."

LOCATION AND DESCRIPTION OF COMPLETED OPERATIONS:

"Per the contract or agreement."

ADDITIONAL PREMIUM:

(If No entry appears above, information required to complete this endorsement will be shown in the Declarations as applicable to the endorsement.)

SECTION II - WHO IS AN INSURED is amended to include as an insured;

The person or organization shown in the Schedule, but only with respect to liability arising out of "your work" at the location designated and described in the schedule of this endorsement performed for that additional insured and included in the "products-completed operations hazard".

All other terms and conditions remain unchanged.

Authorized Representative or Countersignature (in States Where Applicable)

Includes copyrighted material of Insurance Services Office, Inc., with its permission.

## ENDORSEMENT

This endorsement, effective 06/01/2019 12:01 A.M. forms a part of

policy No. 5342022 issued to **Alpine Demolition Services, LLC**

By National Union Fire Insurance Company

**THIS ENDORSEMENT CHANGES THE POLICY. PLEASE READ IT CAREFULLY.**

## ADDITIONAL INSURED- OWNERS, LESSEES, OR CONTRACTORS - SCHEDULED PERSON OR ORGANIZATION

*This endorsement modifies insurance provided under the following:*

**COMMERCIAL GENERAL LIABILITY COVERAGE FORM**

**SCHEDULE**

**NAME OF PERSON OR ORGANIZATION:**

**Any person or organization whom you become obligated to include as an additional insured as a result of any contract or agreement you have entered into." Locations: "Per the contract or agreement."**

(If no entry appears above, information required to complete this endorsement will be shown in the Declarations as applicable to the endorsement.)

**A.** **SECTION II -WHO IS AN INSURED** is amended to include as an insured:

The person or organization shown in the schedule, but only with respect to liability arising out of your ongoing operations performed for that additional insured.

**B.** With respect to the insurance afforded to these additional insureds, **SECTION I - COVERAGES, COVERAGE A - BODILY INJURY AND PROPERTY DAMAGE LIABILITY, 2. - Exclusions,** is amended to include the following additional exclusion;

This insurance does not apply to "bodily injury" or "property damage" occurring after:

**(1)** all work, including materials, parts or equipment furnished in connection with such work, on the project (other than service, maintenance or repairs) to be performed by or on behalf of the additional insured(s) at the site of the covered operations has been completed; or,

**(2)** that portion of "your work" out of which the injury or damage arises has been put to its intended use by any person or organization other than another contractor or subcontractor engaged in performing operations for a principal as a part of the same project.

All other terms and conditions remain unchanged.

**Authorized Representative or Countersignature (in States Where Applicable)**



Includes copyrighted material of Insurance Services Office, Inc., with its permission.

Alfred Benesch & Company
35 West Wacker Drive, Suite 3300
Chicago, IL 60601-1739
www.benesch.com
P 312-565-0450
F 312-565-2497

July 29, 2019

Illinois State Toll Highway Authority
2700 Ogden Avenue
Downers Grove, IL 60515

**Subject: ISTHA Contract No. I-18-4428 – Bridge 261 carrying BNSF over I-294**
**Pay Item No. 50500105 (Furnishing and Erecting Structural Steel)**
**Benesch Project No. 10395**
**Area Equipment Job No. 451**

To Whom it May Concern:

This letter is to confirm that Alfred Benesch & Company agrees to maintain Engineering Professional Liability insurance on ISHTA Contract I-18-4428, Pay Item No. 50500105 (Furnishing and Erecting Structural Steel) for a continuous period of not less than 5 (five) years after project completion, provided such insurance remains commercially available and at reasonable rates.

Sincerely

[redacted]

Penny Wizer
Director of Risk Management

ALFRBEN-01 MDONOVAN

ACORD

# CERTIFICATE OF LIABILITY INSURANCE

DATE (MM/DD/YYYY) 7/29/2019

THIS CERTIFICATE IS ISSUED AS A MATTER OF INFORMATION ONLY AND CONFERS NO RIGHTS UPON THE CERTIFICATE HOLDER. THIS CERTIFICATE DOES NOT AFFIRMATIVELY OR NEGATIVELY AMEND, EXTEND OR ALTER THE COVERAGE AFFORDED BY THE POLICIES BELOW. THIS CERTIFICATE OF INSURANCE DOES NOT CONSTITUTE A CONTRACT BETWEEN THE ISSUING INSURER(S), AUTHORIZED REPRESENTATIVE OR PRODUCER, AND THE CERTIFICATE HOLDER.

IMPORTANT: If the certificate holder is an ADDITIONAL INSURED, the policy(ies) must have ADDITIONAL INSURED provisions or be endorsed. If SUBROGATION IS WAIVED, subject to the terms and conditions of the policy, certain policies may require an endorsement. A statement on this certificate does not confer rights to the certificate holder in lieu of such endorsement(s).

PRODUCER
Ames & Gough
859 Willard Street
Suite 320
Quincy, MA 02169

CONTACT NAME:
PHONE (A/C, No, Ext): (617) 328-6555 FAX (A/C, No): (617) 328-6888
E-MAIL ADDRESS: boston@amesgough.com

| INSURER(S) AFFORDING COVERAGE | NAIC # |
|---|---|
| INSURER A : Travelers Indemnity Co. of America A++, XV | 25666 |
| INSURER B : Travelers Property Casualty Company of America | 25674 |
| INSURER C : Phoenix Insurance Company A+, XV | 25623 |
| INSURER D : Berkshire Hathaway Specialty Insurance Company | 22276 |
| INSURER E : | |
| INSURER F : | |

INSURED
Alfred Benesch & Company
35 West Wacker Drive, Suite 3300
Chicago, IL 60601-5927

COVERAGES CERTIFICATE NUMBER: REVISION NUMBER:

THIS IS TO CERTIFY THAT THE POLICIES OF INSURANCE LISTED BELOW HAVE BEEN ISSUED TO THE INSURED NAMED ABOVE FOR THE POLICY PERIOD INDICATED. NOTWITHSTANDING ANY REQUIREMENT, TERM OR CONDITION OF ANY CONTRACT OR OTHER DOCUMENT WITH RESPECT TO WHICH THIS CERTIFICATE MAY BE ISSUED OR MAY PERTAIN, THE INSURANCE AFFORDED BY THE POLICIES DESCRIBED HEREIN IS SUBJECT TO ALL THE TERMS, EXCLUSIONS AND CONDITIONS OF SUCH POLICIES. LIMITS SHOWN MAY HAVE BEEN REDUCED BY PAID CLAIMS.

| INSR LTR | TYPE OF INSURANCE | ADDL INSD | SUBR WVD | POLICY NUMBER | POLICY EFF (MM/DD/YYYY) | POLICY EXP (MM/DD/YYYY) | LIMITS | |
|---|---|---|---|---|---|---|---|---|
| A | X COMMERCIAL GENERAL LIABILITY<br>CLAIMS-MADE X OCCUR<br>GEN'L AGGREGATE LIMIT APPLIES PER:<br>POLICY X PRO-JECT X LOC<br>OTHER: | X | X | 630-0D870755 | 5/31/2019 | 5/31/2020 | EACH OCCURRENCE<br>DAMAGE TO RENTED PREMISES (Ea occurrence)<br>MED EXP (Any one person)<br>PERSONAL & ADV INJURY<br>GENERAL AGGREGATE<br>PRODUCTS - COMP/OP AGG | $ 1,000,000<br>$ 1,000,000<br>$ 10,000<br>$ 1,000,000<br>$ 2,000,000<br>$ 2,000,000 |
| B | AUTOMOBILE LIABILITY<br>X ANY AUTO<br>OWNED AUTOS ONLY / SCHEDULED AUTOS<br>X HIRED AUTOS ONLY / X NON-OWNED AUTOS ONLY | X | X | BA-0N614884 | 5/31/2019 | 5/31/2020 | COMBINED SINGLE LIMIT (Ea accident)<br>BODILY INJURY (Per person)<br>BODILY INJURY (Per accident)<br>PROPERTY DAMAGE (Per accident) | $ 1,000,000 |
| | UMBRELLA LIAB / OCCUR<br>EXCESS LIAB / CLAIMS-MADE<br>DED / RETENTION $ | | | | | | EACH OCCURRENCE<br>AGGREGATE | |
| C | WORKERS COMPENSATION AND EMPLOYERS' LIABILITY<br>ANY PROPRIETOR/PARTNER/EXECUTIVE OFFICER/MEMBER EXCLUDED? (Mandatory in NH) Y/N N<br>If yes, describe under DESCRIPTION OF OPERATIONS below | N/A | | UB-5K723986 | 5/31/2019 | 5/31/2020 | X PER STATUTE / OTH-ER<br>E.L. EACH ACCIDENT<br>E.L. DISEASE - EA EMPLOYEE<br>E.L. DISEASE - POLICY LIMIT | $ 1,000,000<br>$ 1,000,000<br>$ 1,000,000 |
| D | Professional Liab | | | 47-EPP-305297-02 | 5/31/2019 | 5/31/2020 | Per Claim | 2,000,000 |
| D | | | | 47-EPP-305297-02 | 5/31/2019 | 5/31/2020 | Aggregate | 2,000,000 |

DESCRIPTION OF OPERATIONS / LOCATIONS / VEHICLES (ACORD 101, Additional Remarks Schedule, may be attached if more space is required)
RE: Benesch Project No. 10395 (PM: M. Hellenthal); ISTHA Contract No. I-18-4428 – Bridge 261 carrying BNSF over I-294 pay item 50500105 Furnishing and erecting structural steel

Area Equipment, Inc. and Illinois State Toll Highway Authority shall be included as additional insured with respects to General and Auto Liability where required by written contract. General and Auto Liability is primary and Non-contributory as required per written contract. A Waiver of Subrogation is provided in accordance with the policy terms and conditions.

CERTIFICATE HOLDER

Illinois State Toll Highway Authority
2700 Ogden Avenue
Downers Grove, IL 60515

CANCELLATION

SHOULD ANY OF THE ABOVE DESCRIBED POLICIES BE CANCELLED BEFORE THE EXPIRATION DATE THEREOF, NOTICE WILL BE DELIVERED IN ACCORDANCE WITH THE POLICY PROVISIONS.

AUTHORIZED REPRESENTATIVE
[redacted]


© 1988-2015 ACORD CORPORATION. All rights reserved.
The ACORD name and logo are registered marks of ACORD

Alfred Benesch
Eff: 5/31/19-20
Policy# 630-0D870755



**THIS ENDORSEMENT CHANGES THE POLICY. PLEASE READ IT CAREFULLY.**

# BLANKET ADDITIONAL INSURED – AUTOMATIC STATUS IF REQUIRED BY WRITTEN CONTRACT (CONTRACTORS)

This endorsement modifies insurance provided under the following:

COMMERCIAL GENERAL LIABILITY COVERAGE PART

**The following is added to SECTION II – WHO IS AN INSURED:**

Any person or organization that:

a. You agree in a written contract or agreement to include as an additional insured on this Coverage Part; and

b. Has not been added as an additional insured for the same project by attachment of an endorsement under this Coverage Part which includes such person or organization in the endorsement's schedule;

is an insured, but:

a. Only with respect to liability for "bodily injury" or "property damage" that occurs, or for "personal injury" caused by an offense that is committed, subsequent to the signing of that contract or agreement and while that part of the contract or agreement is in effect; and

b. Only as described in Paragraph **(1)**, **(2)** or **(3)** below, whichever applies:

**(1)** If the written contract or agreement specifically requires you to provide additional insured coverage to that person or organization by the use of:

**(a)** The Additional Insured – Owners, Lessees or Contractors – (Form B) endorsement CG 20 10 11 85; or

**(b)** Either or both of the following: the Additional Insured – Owners, Lessees or Contractors – Scheduled Person Or Organization endorsement CG 20 10 10 01, or the Additional Insured – Owners, Lessees or Contractors – Completed Operations endorsement CG 20 37 10 01;

the person or organization is an additional insured only if the injury or damage arises out of "your work" to which the written contract or agreement applies;

**(2)** If the written contract or agreement specifically requires you to provide additional insured coverage to that person or organization by the use of:

**(a)** The Additional Insured – Owners, Lessees or Contractors – Scheduled Person or Organization endorsement CG 20 10 07 04 or CG 20 10 04 13, the Additional Insured – Owners, Lessees or Contractors – Completed Operations endorsement CG 20 37 07 04 or CG 20 37 04 13, or both of such endorsements with either of those edition dates; or

**(b)** Either or both of the following: the Additional Insured – Owners, Lessees or Contractors – Scheduled Person Or Organization endorsement CG 20 10, or the Additional Insured – Owners, Lessees or Contractors – Completed Operations endorsement CG 20 37, without an edition date of such endorsement specified;

the person or organization is an additional insured only if the injury or damage is caused, in whole or in part, by acts or omissions of you or your subcontractor in the performance of "your work" to which the written contract or agreement applies; or

**(3)** If neither Paragraph **(1)** nor **(2)** above applies:

**(a)** The person or organization is an additional insured only if, and to the extent that, the injury or damage is caused by acts or omissions of you or your subcontractor in the performance of "your work" to which the written contract or agreement applies; and

**(b)** Such person or organization does not qualify as an additional insured with respect to the independent acts or omissions of such person or organization.

The insurance provided to such additional insured is subject to the following provisions:

a. If the Limits of Insurance of this Coverage Part shown in the Declarations exceed the minimum limits required by the written contract or agreement, the insurance provided to the additional insured will be limited to such minimum required limits. For the purposes of determining whether


© 2017 The Travelers Indemnity Company. All rights reserved.

this limitation applies, the minimum limits required by the written contract or agreement will be considered to include the minimum limits of any Umbrella or Excess liability coverage required for the additional insured by that written contract or agreement. This provision will not increase the limits of insurance described in Section III – Limits Of Insurance.

b. The insurance provided to such additional insured does not apply to:

(1) Any "bodily injury", "property damage" or "personal injury" arising out of the providing, or failure to provide, any professional architectural, engineering or surveying services, including:

(a) The preparing, approving, or failing to prepare or approve, maps, shop drawings, opinions, reports, surveys, field orders or change orders, or the preparing, approving, or failing to prepare or approve, drawings and specifications; and

(b) Supervisory, inspection, architectural or engineering activities.

(2) Any "bodily injury" or "property damage" caused by "your work" and included in the "products-completed operations hazard" unless the written contract or agreement specifically requires you to provide such coverage for that additional insured during the policy period.

c. The additional insured must comply with the following duties:

(1) Give us written notice as soon as practicable of an "occurrence" or an offense which may result in a claim. To the extent possible, such notice should include:

(a) How, when and where the "occurrence" or offense took place;

(b) The names and addresses of any injured persons and witnesses; and

(c) The nature and location of any injury or damage arising out of the "occurrence" or offense.

(2) If a claim is made or "suit" is brought against the additional insured:

(a) Immediately record the specifics of the claim or "suit" and the date received; and

(b) Notify us as soon as practicable and see to it that we receive written notice of the claim or "suit" as soon as practicable.

(3) Immediately send us copies of all legal papers received in connection with the claim or "suit", cooperate with us in the investigation or settlement of the claim or defense against the "suit", and otherwise comply with all policy conditions.

(4) Tender the defense and indemnity of any claim or "suit" to any provider of other insurance which would cover such additional insured for a loss we cover. However, this condition does not affect whether the insurance provided to such additional insured is primary to other insurance available to such additional insured which covers that person or organization as a named insured as described in Paragraph 4., Other Insurance, of Section IV – Commercial General Liability Conditions.


© 2017 The Travelers Indemnity Company. All rights reserved.

BV3, LLC
CGLI Policy No. 660-1D295232
Eff. 04/16/19- 04/16/20



**THIS ENDORSEMENT CHANGES THE POLICY. PLEASE READ IT CAREFULLY.**

# ARCHITECTS, ENGINEERS AND SURVEYORS INDUSTRY*EDGE*℠ ENDORSEMENT

This endorsement modifies insurance provided under the following:

COMMERCIAL GENERAL LIABILITY COVERAGE PART

**GENERAL DESCRIPTION OF COVERAGE** – This endorsement broadens coverage. However, coverage for any injury, damage or medical expenses described in any of the provisions of this endorsement may be excluded or limited by another endorsement to this Coverage Part, and these coverage broadening provisions do not apply to the extent that coverage is excluded or limited by such an endorsement. The following listing is a general coverage description only. Limitations and exclusions may apply to these coverages. Read all the provisions of this endorsement and the rest of your policy carefully to determine rights, duties, and what is and is not covered.

A. Broadened Named Insured
B. Incidental Medical Malpractice
C. Reasonable Force – Bodily Injury Or Property Damage
D. Non-Owned Watercraft – Increased To Up To 75 feet
E. Aircraft Chartered With Pilot
F. Extension Of Coverage – Damage To Premises Rented To You
G. Personal Injury – Assumed by Contract
H. Increased Supplementary Payments
I. **Additional Insured** – Owner, Manager Or Lessor Of Premises
J. Additional Insured – Lessor Of Leased Equipment
K. Additional Insured – State Or Political Subdivisions – Permits Relating To Premises
L. Additional Insured – State Or Political Subdivisions – Permits Relating To Operations
M. Who Is An Insured – Newly Acquired Or Formed Organizations
N. Injury To Co-Employees And Co-Volunteer Workers
O. Medical Payments Limit
P. Knowledge And Notice Of Occurrence Or Offense
Q. **Other Insurance Condition**
R. Unintentional Omission
S. **Waiver Of Transfer Of Rights Of Recovery** Against Others To Us When Required By Contract
T. Amended Bodily Injury Definition
U. Amended Insured Contract Definition – Railroad Easement
V. Additional Definition – Written Contract Requiring Insurance

## PROVISIONS

### A. BROADENED NAMED INSURED – UNNAMED SUBSIDIARIES

The Named Insured in Item 1. of the Declarations is amended as follows:

The person or organization named in Item 1. of the Declarations and any organization, other than a partnership, joint venture, limited liability company or trust, of which you are the sole owner or in which you maintain the majority ownership interest on the effective date of the policy. However, coverage for any such additional organization will cease as of the date, if any, during the policy period, that you no longer are the sole owner of, or maintain the majority ownership interest in, such organization.

### B. INCIDENTAL MEDICAL MALPRACTICE

1. The following is added to the definition of "occurrence" in the **DEFINITIONS** Section:

   Unless you are in the business or occupation of providing professional health care services, "occurrence" also means an act or omission


© 2008 The Travelers Companies, Inc.

committed by any of your "employees" who is employed by you as a registered nurse, licensed practical nurse, emergency medical technician or paramedic, in providing or failing to provide "incidental medical services" or "Good Samaritan services" to a person.

2. The following is added to the **DEFINITIONS** Section:

   a. "Incidental medical services" means medical, surgical, dental, laboratory, x-ray or nursing service, treatment, advice or instruction; the related furnishing of food or beverages; the furnishing or dispensing of drugs or medical supplies or appliances; or first aid.

   b. "Good Samaritan services" means those medical services rendered or provided in an emergency and for which no remuneration is demanded or received.

3. The following is added to **Paragraph 2.a.(1)** of **SECTION II – WHO IS AN INSURED**

   Paragraphs (1) (a), (b), (c) and (d) above do not apply to any of your "employees" who are employed by you as a registered nurse, licensed practical nurse, emergency medical technician or paramedic but only while performing the services described in Paragraph 1. above and while acting within the scope of their employment by you. Any such "employees" rendering "incidental medical services" or "Good Samaritan services" will be deemed to be acting within the scope of their employment by you.

4. The following exclusion is added to Paragraph **2. Exclusions** of **SECTION I – COVERAGES – COVERAGE A BODILY INJURY AND PROPERTY DAMAGE LIABILITY:**

   **Sale of Pharmaceuticals**

   "Bodily injury" or "property damage" arising out of the willful violation of a penal statute or ordinance relating to the sale of pharmaceuticals committed by or with the knowledge or consent of the insured.

5. The following is added to Paragraph **4.b., Excess Insurance**, of **SECTION IV – COMMERCIAL GENERAL LIABILITY CONDITIONS:**

   This insurance is excess over any valid and collectible "other insurance", whether primary, excess, contingent or on any other basis, that is available to you or any of your "employees" for "bodily injury" that arises out of providing or failing to provide "incidental medical services" or "Good Samaritan services", except for insurance purchased specifically by you to apply in excess of the Limits of Insurance shown in the Declarations for this Coverage Part.

6. The following is added to Paragraph **5.** of **SECTION III – LIMITS OF INSURANCE:**

   For the purposes of determining the applicable Each Occurrence Limit, all related acts or omissions committed by any of your "employees" in providing or failing to provide "incidental medical services" or "Good Samaritan services" to any one person will be deemed to be one "occurrence".

**C. REASONABLE FORCE PROPERTY DAMAGE – EXCEPTION TO EXPECTED OR INTENDED INJURY EXCLUSION**

The following replaces Exclusion **a., Expected Or Intended Injury**, in Paragraph **2.** of **SECTION I – COVERAGES – COVERAGE A BODILY INJURY AND PROPERTY DAMAGE LIABILITY:**

**a. Expected Or Intended Injury Or Damage**

"Bodily injury" or "property damage" expected or intended from the standpoint of the insured. This exclusion does not apply to "bodily injury" or "property damage" resulting from the use of reasonable force to protect any person or property.

**D. NON-OWNED WATERCRAFT – INCREASED TO UP TO 75 FEET**

1. The following replaces Paragraph **(2)** of Exclusion **g., Aircraft, Auto Or Watercraft**, in Paragraph **2.** of **SECTION I – COVERAGES – COVERAGE A BODILY INJURY AND PROPERTY DAMAGE LIABILITY:**

   **(2)** A watercraft you do not own that is:

   **(a)** Less than 75 feet long; and

   **(b)** Not being used to carry any person or property for a charge.

2. The following is added to **SECTION II – WHO IS AN INSURED:**

   Any person who, with your expressed or implied consent, either uses or is responsible for the use of a nonowned watercraft that is less than 75 feet and not being used to carry person or property for a charge is included as an insured under this Coverage Part.


© 2008 The Travelers Companies, Inc.

E. **AIRCRAFT CHARTERED WITH PILOT**

The following is added to Exclusion g., **Aircraft, Auto Or Watercraft**, in Paragraph **2.** of **SECTION I – COVERAGES – COVERAGE A BODILY INJURY AND PROPERTY DAMAGE LIABILITY:**

This exclusion does not apply to an aircraft that is:

(a) Chartered with a pilot to any insured; and

(b) Not owned by any insured.

F. **EXTENSION OF COVERAGE – DAMAGE TO PREMISES RENTED TO YOU**

1. The following replaces the last paragraph of **SECTION I – COVERAGES – COVERAGE A BODILY INJURY AND PROPERTY DAMAGE LIABILITY:**

   Exclusions c. through n. do not apply to damage to premises while rented to you, or temporarily occupied by you with permission of the owner, caused by:

   a. Fire;

   b. Explosion;

   c. Lightning;

   d. Smoke resulting from such fire, explosion, or lightning; or

   e. Water.

   A separate limit of insurance applies to this coverage as described in **SECTION III – LIMITS OF INSURANCE**

2. The insurance under this Provision **F.** does not apply to damage to premises while rented to you, or temporarily occupied by you with permission of the owner, caused by:

   a. Rupture, bursting, or operation of pressure relief devices;

   b. Rupture or bursting due to expansion or swelling of the contents of any building or structure, caused by or resulting from water; or

   c. Explosion of steam boilers, steam pipes, steam engines, or steam turbines.

3. The following replaces Paragraph **6.** of **SECTION III – LIMITS OF INSURANCE**

   Subject to **5.** above, the Damage To Premises Rented To You Limit is the most we will pay under Coverage **A** for the sum of all damages because of "property damage" to any one premises while rented to you, or temporarily occupied by you with permission of the owner, caused by: fire; explosion; lightning; smoke resulting from such fire, explosion, or lightning; or water. The Damage To Premises Rented To You Limit will apply to all "property damage" proximately caused by the same "occurrence", whether such damage results from: fire; explosion; lightning; smoke resulting from such fire, explosion, or lightning; or water; or any combination of any of these causes.

   The Damage To Premises Rented To You Limit will be the higher of:

   a. $300,000; or

   b. The amount shown for the Damage To Premises Rented To You Limit in the Declarations for this Coverage Part.

4. The following replaces Paragraph **a.** of the definition of "insured contract" in the **DEFINITIONS** Section:

   a. A contract for a lease of premises. However, that portion of the contract for a lease of premises that indemnifies any person or organization for damage to premises while rented to you, or temporarily occupied by you with permission of the owner, caused by: fire; explosion; lightning; smoke resulting from such fire, explosion, or lightning; or water is not an "insured contract";

G. **PERSONAL INJURY – ASSUMED BY CONTRACT**

The following replaces Exclusion **e., Contractual Liability** in Paragraph **2.** of **SECTION I – COVERAGES – COVERAGE B PERSONAL AND ADVERTISING INJURY LIABILITY:**

"Advertising injury" for which the insured has assumed liability in a contract or agreement. This exclusion does not apply to liability for damages that the insured would have in the absence of the contract or agreement.

H. **INCREASED SUPPLEMENTARY PAYMENTS**

1. The following replaces Paragraph **1.b.** of **SUPPLEMENTARY PAYMENTS – COVERAGES A AND B** of **SECTION I – COVERAGES:**

   b. Up to $2,500 for cost of bail bonds required because of accidents or traffic law violations arising out of the use of any vehicle to which the Bodily Injury Liability Coverage applies. We do not have to furnish these bonds.


© 2006 The Travelers Companies, Inc.

2. The following replaces Paragraph 1.d. of **SUPPLEMENTARY PAYMENTS – COVERAGES A AND B** of **SECTION I – COVERAGES**:

   d. All reasonable expenses incurred by the insured at our request to assist us in the investigation or defense of the claim or "suit", including actual loss of earnings up to $500 a day because of time off from work.

**I. ADDITIONAL INSURED – OWNER, MANAGER OR LESSOR OF PREMISES**

1. The following is added to **SECTION II – WHO IS AN INSURED**:

   Any person or organization that you have agreed in a "written contract requiring insurance" to include as an additional insured on this Coverage Part is an insured, but:

   a. Only with respect to liability for "bodily injury" or "property damage" that occurs, or "personal injury" caused by an offense committed, after you have entered into that "written contract requiring insurance"; and

   b. Only if the "bodily injury", "property damage" or "personal injury" is caused, in whole or in part, by acts or omissions of you or any person or organization performing operations on your behalf, and arises out of the ownership, maintenance or use of that part of any premises leased to you under that "written contract requiring insurance".

2. The insurance provided to such additional insured under this Provision I. is subject to the following provisions:

   a. The limits of insurance afforded to such additional insured shall be the limits which you agreed to provide in the "written contract requiring insurance", or the limits shown in the Declarations for this Coverage Part, whichever are less; and

   b. The insurance afforded to such additional insured does not apply to:

      (1) Any "bodily injury" or "property damage" that occurs, or "personal injury" caused by an offense committed, after you cease to be a tenant in that premises;

      (2) Any structural alterations, new construction or demolition operations performed by or on behalf of such additional insured; or

      (3) Any premises for which coverage is excluded by another endorsement to this Coverage Part.

3. This Provision I. does not apply on any basis to any person or organization for which coverage as an additional insured specifically is added by another endorsement to this Coverage Part.

**J. ADDITIONAL INSURED – LESSOR OF LEASED EQUIPMENT**

1. The following is added to **SECTION II – WHO IS AN INSURED**:

   Any person or organization that you have agreed in a "written contract requiring insurance" to include as an additional insured on this Coverage Part is an insured, but:

   a. Only with respect to liability for "bodily injury" or "property damage" that occurs, or "personal injury" caused by an offense committed, after you have entered into that "written contract requiring insurance"; and

   b. Only if the "bodily injury", "property damage" or "personal injury" is caused, in whole or in part, by acts or omissions of you or any person or organization performing operations on your behalf, in the maintenance, operation or use of equipment leased to you by such additional insured.

2. The insurance provided to such additional insured under this Provision J. is subject to the following provisions:

   a. The limits of insurance afforded to such additional insured shall be the limits which you agreed to provide in the "written contract requiring insurance", or the limits shown in the Declarations for this Coverage Part, whichever are less; and

   b. The insurance afforded to such additional insured does not apply:

      (1) To any "bodily injury" or "property damage" that occurs, or "personal injury" caused by an offense committed, after the equipment lease expires; or

      (2) If the equipment is leased with an operator.


© 2008 The Travelers Companies, Inc.

3. This Provision J. does not apply on any basis to any person or organization for which coverage as an additional insured specifically is added by another endorsement to this Coverage Part.

K. **ADDITIONAL INSURED – STATE OR POLITICAL SUBDIVISIONS – PERMITS RELATING TO PREMISES**

The following is added to **SECTION II – WHO IS AN INSURED:**

Any state or political subdivision that has issued a permit in connection with premises owned or occupied by, or rented or loaned to, you, is an insured, but only with respect to "bodily injury", "property damage", "personal injury" or "advertising injury" arising out of the existence, ownership, use, maintenance, repair, construction, erection or removal of advertising signs, awnings, canopies, cellar entrances, coal holes, driveways, manholes, marquees, hoist away openings, sidewalk vaults, elevators, street banners or decorations for which that state or political subdivision has issued such permit.

L. **ADDITIONAL INSURED – STATE OR POLITICAL SUBDIVISIONS – PERMITS RELATING TO OPERATIONS**

The following is added to **SECTION II – WHO IS AN INSURED:**

Any state or political subdivision that has issued a permit is an insured, but only with respect to "bodily injury", "property damage", "personal injury" or "advertising injury" arising out of operations performed by you or on your behalf for which that state or political subdivision has issued such permit. However, no such state or political subdivision is an insured for:

1. "Bodily injury", "property damage", "personal injury" or "advertising injury" arising out of operations performed for that state or political subdivision; or
2. "Bodily injury" or "property damage" included within the "products – completed operations hazard".

M. **WHO IS AN INSURED – NEWLY ACQUIRED OR FORMED ORGANIZATIONS**

The following replaces Paragraph 4.a. of **SECTION II – WHO IS AN INSURED:**

a. Coverage under this provision is afforded only until the 180th day after you acquire or form the organization or the end of the policy period, whichever is earlier. Any such newly acquired or formed organization that you report in writing to us within 180 days after you acquire or form the organization will be covered under this provision until the end of the policy period, even if there are more than 180 days remaining until the end of the policy period.

N. **INJURY TO CO-EMPLOYEES AND CO-VOLUNTEER WORKERS**

The following is added to **SECTION II – WHO IS AN INSURED:**

1. Your "employees" are insureds with respect to "bodily injury" to a co-"employee" in the course of the co-"employee's" employment by you, or to your "volunteer workers" while performing duties related to the conduct of your business, provided that this coverage for your "employees" does not apply to acts outside the scope of their employment by you or while performing duties unrelated to the conduct of your business.
2. Your "volunteer workers" are insureds with respect to "bodily injury" to a co-"volunteer worker" while performing duties related to the conduct of your business, or to your "employees" in the course of the "employee's" employment by you, provided that this coverage for your "volunteer workers" does not apply while performing duties unrelated to the conduct of your business.
3. Subparagraphs **2.a.(1)(a), (b)** and **(c)** and **3.a.** of **SECTION II – WHO IS AN INSURED** do not apply to "bodily injury" for which insurance is provided by paragraph **1.** or **2.** above.

O. **MEDICAL PAYMENTS LIMIT**

The following replaces paragraph **7.** of **SECTION III – LIMITS OF INSURANCE:**

Subject to **5.** above, the Medical Expense Limit is the most we will pay under Coverage C for all medical expenses because of "bodily injury" sustained by any one person, and will be the higher of:

a. $10,000; or
b. The amount shown on the Declarations for Medical Expense Limit.

P. **KNOWLEDGE AND NOTICE OF OCCURRENCE OR OFFENSE**

The following is added to Paragraph **2. Duties In The Event of Occurrence, Offense, Claim Or**

 © 2008 The Travelers Companies, Inc. 

Suit of **SECTION IV – COMMERCIAL GENERAL LIABILITY CONDITIONS:**

Notice of an "occurrence" or of an offense which may result in a claim must be given as soon as practicable after knowledge of the "occurrence" or offense has been reported to you, one of your "executive officers" (if you are a corporation), one of your partners who is an individual (if you are a partnership), one of your managers (if you are a limited liability company), one of your trustees who is an individual (if you are a trust), or an "employee" (such as an insurance, loss control or risk manager or administrator) designated by you to give such notice.

Knowledge by any other "employee" of an "occurrence" or offense does not imply that you also have such knowledge.

Notice of an "occurrence" or of an offense which may result in a claim will be deemed to be given as soon as practicable to us if it is given in good faith as soon as practicable to your workers' compensation, accident, or health insurer. This applies only if you subsequently give notice of the "occurrence" or offense to us as soon as practicable after you, one of your "executive officers" (if you are a corporation), one of your partners who is an individual (if you are a partnership), one of your managers (if you are a limited liability company), one of your trustees who is an individual (if you are a trust), or an "employee" (such as an insurance, loss control or risk manager or administrator) designated by you to give such notice discovers that the "occurrence" or offense may involve this policy.

**Q. OTHER INSURANCE CONDITION**

1. The following replaces Paragraph 4., **Other Insurance** of **SECTION IV – COMMERCIAL GENERAL LIABILITY CONDITIONS:**

   4. **Other Insurance**

      If valid and collectible "other insurance" is available to the insured for a loss we cover under Coverages A or B of this Coverage Part, our obligations are limited as follows:

      a. **Primary Insurance**

         This insurance is primary except when b. below applies. If this insurance is primary, our obligations are not affected unless any of the "other insurance" is also primary. Then, we will share with all that "other insurance" by the method described in c. below.

      b. **Excess Insurance**

         This insurance is excess over any of the "other insurance", whether primary, excess, contingent or on any other basis:

         (1) That is Fire, Extended Coverage, Builder's Risk, Installation Risk, or similar coverage for "your work";

         (2) That is Fire insurance for premises rented to you or temporarily occupied by you with permission of the owner;

         (3) That is insurance purchased by you to cover your liability as a tenant for "property damage" to premises rented to you or temporarily occupied by you with permission of the owner; or

         (4) If the loss arises out of the maintenance or use of aircraft, "autos", or watercraft to the extent not subject to Exclusion g. of Section I – Coverage A – Bodily Injury And Property Damage Liability; or

         (5) That is available to the insured when the insured is an additional insured under any other policy, including any umbrella or excess policy.

         When this insurance is excess, we will have no duty under Coverages A or B to defend the insured against any "suit" if any provider of "other insurance" has a duty to defend the insured against that "suit". If no provider of "other insurance" defends, we will undertake to do so, but we will be entitled to the insured's rights against all those providers of "other insurance".

         When this insurance is excess over "other insurance", we will pay only our share of the amount of the loss, if any, that exceeds the sum of:

         (1) The total amount that all such "other insurance" would pay for the loss in the absence of this insurance; and


© 2008 The Travelers Companies, Inc.

(2) The total of all deductible and self-insured amounts under that "other insurance".

We will share the remaining loss, if any, with any "other insurance" that is not described in this Excess Insurance provision.

c. **Method Of Sharing**

If all of the "other insurance" permits contribution by equal shares, we will follow this method also. Under this approach each provider of insurance contributes equal amounts until it has paid its applicable limit of insurance or none of the loss remains, whichever comes first.

If any of the "other insurance" does not permit contribution by equal shares, we will contribute by limits. Under this method, the share of each provider of insurance is based on the ratio of its applicable limit of insurance to the total applicable limits of insurance of all providers of insurance.

2. The following definition is added to **SECTION V – DEFINITIONS**:

"Other Insurance":

a. Means insurance, or the funding of losses, that is provided by, through or on behalf of:

(1) Another insurance company;

(2) Us or any of our affiliated insurance companies, except when the Non cumulation of Each Occurrence Limit section of Paragraph **5.** of **LIMITS OF INSURANCE** (Section III) or the Non cumulation of Personal and Advertising Injury limit sections of Paragraph **4.** of **LIMITS OF INSURANCE** (Section III) applies;

(3) Any risk retention group;

(4) Any self-insurance method or program, other than any funded by you and over which this Coverage Part applies; or

(5) Any similar risk transfer or risk management method.

b. Does not include umbrella insurance, or excess insurance, that you bought specifically to apply in excess of the Limits of Insurance shown on the Declarations of this Coverage Part.

R. **UNINTENTIONAL OMISSION**

1. The following is added to Paragraph **6. Representations** of **SECTION IV – COMMERCIAL GENERAL LIABILITY CONDITIONS:**

The unintentional omission of, or unintentional error in, any information provided by you which we relied upon in issuing this policy shall not prejudice your rights under this insurance.

2. This Provision R. does not affect our right to collect additional premium or to exercise our right of cancellation or nonrenewal in accordance with applicable insurance laws or regulations.

S. **WAIVER OF TRANSFER OF RIGHTS OF RECOVERY AGAINST OTHERS TO US WHEN REQUIRED BY CONTRACT**

The following is added to Paragraph **8. Transfer of Rights of Recovery Against Others to Us** of **SECTION IV – COMMERCIAL GENERAL LIABILITY CONDITIONS:**

We waive any rights of recovery we may have against any person or organization because of payments we make for "bodily injury", "property damage", "personal injury" or "advertising injury" arising out of:

1. Premises owned by you, temporarily occupied by you with permission of the owner, or leased or rented to you;

2. Ongoing operations performed by you, or on your behalf, under a contract or agreement with that person or organization;

3. "Your work"; or

4. "Your products".

We waive these rights only where you have agreed to do so as part of a "written contract requiring insurance" entered into by you before, and in effect when, the "bodily injury" or "property damage" occurs, or the "personal injury" offense or "advertising injury" offense is committed.

T. **AMENDED BODILY INJURY DEFINITION**

The following replaces the definition of "bodily injury" in the **DEFINITIONS** Section:

"Bodily injury" means bodily injury, mental anguish, mental injury, shock, fright, disability, humiliation, sickness or disease sustained by a per-

 © 2008 The Travelers Companies, Inc. 

son, including death resulting from any of these at any time.

U. **AMENDED INSURED CONTRACT DEFINITION – RAILROAD EASEMENT**

1. Subparagraph c. of the definition of "insured contract" in the **DEFINITIONS** Section is replaced by the following:

   c. Any easement or license agreement;

2. Subparagraph f.(1) of the definition of "insured contract" in the **DEFINITIONS** Section is deleted.

V. **ADDITIONAL DEFINITION – WRITTEN CONTRACT REQUIRING INSURANCE**

The following definition is added to the **DEFINITIONS** Section:

"Written contract requiring insurance" means that part of any written contract or written agreement under which you are required to include a person or organization as an additional insured on this Coverage Part, provided that the "bodily injury" and "property damage" occurs, and the "personal injury" is caused by an offense committed:

a. After the signing and execution of the contract or agreement by you;

b. While that part of the contract or agreement is in effect; and

c. Before the end of the policy period.



© 2008 The Travelers Companies, Inc.

COLLINS
ENGINEERS INC.

July 26, 2019

ISTHA Contract I-18-4428
BNSF Bridge Reconstruction (BN 261)

Mr. Brian Fidoruk, P.E.
Walsh Construction
929 West Adams Street
Chicago, Illinois 60607

Dear Mr. Fidoruk:

Collins Engineers, Inc. warrants that its Engineering Professional Liability insurance for the pay item listed below shall be maintained continuously for a period of not less than five years after the above referenced project is complete.

- 50157300 – Protective Shield
- 50201101 – Cofferdam (Type-1) (Location 1)
- 52200020 – Temporary Soil Retention System
- 52200250 – Untreated Timber Lagging
- X1200080 – Storm Sewers Jacked in Place, 48"
- X1200140 – Precast Concrete Box Culvert (Special)
- X2200003 – Fence (Special)
- 52100400 – Steel Bearing Assembly
- 54010605 – Precast Concrete Box Culverts 6'x5'
- X5210015 – Elastomeric Bearing Assembly, Type I
- X5210025 – Elastomeric Bearing Assembly, Type II
- X6640050 – Chain Link Fence, 42" Attached to Structure (Special)
- X7330086 – Furnish and Install Walkway
- JI602791 – Junction Chamber, Location 1

Sincerely,
COLLINS ENGINEERS, INC.

[redacted]

Jason Schneider
Regional Manager

123 North Wacker Drive • Suite 900 • Chicago, IL 60606 • 312.704.9300 • Fax 312.704.9320 • www.collinsengr.com

COLLIENG1

ACORD®

# CERTIFICATE OF LIABILITY INSURANCE

DATE (MM/DD/YYYY) 7/25/2019

THIS CERTIFICATE IS ISSUED AS A MATTER OF INFORMATION ONLY AND CONFERS NO RIGHTS UPON THE CERTIFICATE HOLDER. THIS CERTIFICATE DOES NOT AFFIRMATIVELY OR NEGATIVELY AMEND, EXTEND OR ALTER THE COVERAGE AFFORDED BY THE POLICIES BELOW. THIS CERTIFICATE OF INSURANCE DOES NOT CONSTITUTE A CONTRACT BETWEEN THE ISSUING INSURER(S), AUTHORIZED REPRESENTATIVE OR PRODUCER, AND THE CERTIFICATE HOLDER.

IMPORTANT: If the certificate holder is an ADDITIONAL INSURED, the policy(ies) must have ADDITIONAL INSURED provisions or be endorsed. If SUBROGATION IS WAIVED, subject to the terms and conditions of the policy, certain policies may require an endorsement. A statement on this certificate does not confer rights to the certificate holder in lieu of such endorsement(s).

PRODUCER

USI Insurance Services LLC
222 S. Riverside Plaza, Ste. 900
Chicago, IL 60606

CONTACT NAME: Alison Blaser
PHONE (A/C, No, Ext): 312 766 2018 FAX (A/C, No): 610 537 1964
E-MAIL ADDRESS: alison.blaser@usi.com

| INSURER(S) AFFORDING COVERAGE | NAIC # |
|---|---|
| INSURER A: Beazley Insurance Company | 37540 |
| INSURER B: | |
| INSURER C: | |
| INSURER D: | |
| INSURER E: | |
| INSURER F: | |

INSURED

Collins Engineers, Inc.
123 N Wacker Dr Ste 900

Chicago IL 60606

**COVERAGES** **CERTIFICATE NUMBER:** 14444143 **REVISION NUMBER:** See below

THIS IS TO CERTIFY THAT THE POLICIES OF INSURANCE LISTED BELOW HAVE BEEN ISSUED TO THE INSURED NAMED ABOVE FOR THE POLICY PERIOD INDICATED. NOTWITHSTANDING ANY REQUIREMENT, TERM OR CONDITION OF ANY CONTRACT OR OTHER DOCUMENT WITH RESPECT TO WHICH THIS CERTIFICATE MAY BE ISSUED OR MAY PERTAIN, THE INSURANCE AFFORDED BY THE POLICIES DESCRIBED HEREIN IS SUBJECT TO ALL THE TERMS, EXCLUSIONS AND CONDITIONS OF SUCH POLICIES. LIMITS SHOWN MAY HAVE BEEN REDUCED BY PAID CLAIMS.

| INSR LTR | TYPE OF INSURANCE | ADDL INSD | SUBR WVD | POLICY NUMBER | POLICY EFF (MM/DD/YYYY) | POLICY EXP (MM/DD/YYYY) | LIMITS |
|---|---|---|---|---|---|---|---|
| | COMMERCIAL GENERAL LIABILITY<br>CLAIMS-MADE OCCUR<br>GEN'L AGGREGATE LIMIT APPLIES PER:<br>POLICY PRO-JECT LOC<br>OTHER: | | | | | | EACH OCCURRENCE $<br>DAMAGE TO RENTED PREMISES (Ea occurrence) $<br>MED EXP (Any one person) $<br>PERSONAL & ADV INJURY $<br>GENERAL AGGREGATE $<br>PRODUCTS - COMP/OP AGG $<br>$ |
| | AUTOMOBILE LIABILITY<br>ANY AUTO<br>OWNED AUTOS ONLY<br>HIRED AUTOS ONLY<br>SCHEDULED AUTOS<br>NON-OWNED AUTOS ONLY | | | | | | COMBINED SINGLE LIMIT (Ea accident) $<br>BODILY INJURY (Per person) $<br>BODILY INJURY (Per accident) $<br>PROPERTY DAMAGE (Per accident) $<br>$ |
| | UMBRELLA LIAB OCCUR<br>EXCESS LIAB CLAIMS-MADE<br>DED RETENTION $ | | | | | | EACH OCCURRENCE $<br>AGGREGATE $<br>$ |
| | WORKERS COMPENSATION AND EMPLOYERS' LIABILITY<br>ANYPROPRIETOR/PARTNER/EXECUTIVE OFFICER/MEMBER EXCLUDED? Y / N<br>(Mandatory in NH)<br>If yes, describe under DESCRIPTION OF OPERATIONS below | N / A | | | | | PER STATUTE OTH-ER<br>E.L. EACH ACCIDENT $<br>E.L. DISEASE - EA EMPLOYEE $<br>E.L. DISEASE - POLICY LIMIT $ |
| A | Professional Liablity<br>Claims Made Form | | | V15RR9191401 | 03/15/19 | 03/15/20 | $2,000,000 each claim<br>$2,000,000 aggregate |

DESCRIPTION OF OPERATIONS / LOCATIONS / VEHICLES (ACORD 101, Additional Remarks Schedule, may be attached if more space is required)

RE:Engineering for Tollway Contract I-18-4228 BNSF Bridge Reconstruction as follows: 50157300 PROTECTIVE SHIELD
50201101 COFFERDAM (TYPE-1) (LOCATION 1)
52200020 TEMPORARY SOIL RETENTION SYSTEM
52200250 UNTREATED TIMBER LAGGING
X1200080 STORM SEWERS JACKED IN PLACE, 48"
X1200140 PRECAST CONCRETE BOX CULVERT (SPECIAL)
X2200003 FENCE (SPECIAL)

**CERTIFICATE HOLDER**

Walsh Construction Company
929 West Adams
Chicago, IL 60607

**CANCELLATION**

SHOULD ANY OF THE ABOVE DESCRIBED POLICIES BE CANCELLED BEFORE THE EXPIRATION DATE THEREOF, NOTICE WILL BE DELIVERED IN ACCORDANCE WITH THE POLICY PROVISIONS.

AUTHORIZED REPRESENTATIVE

[redacted]

The ACORD name and logo are registered marks of ACORD © 1988-2015 ACORD CORPORATION. All rights reserved.



(This certificate replaces certificate# 14423321 issued on 7/15/2019)

# Additional Remarks Schedule (Continued from Page 1)

52100400 STEEL BEARING ASSEMBLY
54010605 PRECAST CONCRETE BOX CULVERTS 6'X5'
X5210015 ELASTOMERIC BEARING ASSEMBLY, TYPE I (SPECIAL)
X5210025 ELASTOMERIC BEARING ASSEMBLY, TYPE II (SPECIAL)
X6640050 CHAIN LINK FENCE, 42" ATTACHED TO STRUCTURE (SPECIAL)
X7330086 FURNISH AND INSTALL WALKWAY
JI602791 JUNCTION CHAMBER, LOCATION

VIRGILIO □
ASSOCIATES, LTD.

STR□CT□RAL ENGINEERS

August 2, 2019

The Illinois State Toll Highway Authority
2□00 Ogden Avenue
Downers Grove, IL 60515

Re: ISTHA Contract No. I-18-4428 □ Item #52200800 - Segmental Concrete Block Wall

To whom it may concern:

Virgilio □ Associates, Ltd. warrants that its Professional Liability insurance for the subject project shall be maintained continuously for a period of not less than five years after the above referenced project is complete.

Please contact our office if you have any questions of comments.

Sincerely,

[redacted]

VIRGILIO □ ASSOCIATES, LTD.
Paul G. Virgilio, S.E., P.E.
President

24069 North Echo Lake Road, Lake Zurich, IL 6004□□www.virgilioassoc.com □Office: 84□550.8411 □Fax: 84□30□8324

OP ID: JS

# CERTIFICATE OF LIABILITY INSURANCE

DATE (MM/DD/YYYY) 08/07/2019

THIS CERTIFICATE IS ISSUED AS A MATTER OF INFORMATION ONLY AND CONFERS NO RIGHTS UPON THE CERTIFICATE HOLDER. THIS CERTIFICATE DOES NOT AFFIRMATIVELY OR NEGATIVELY AMEND, EXTEND OR ALTER THE COVERAGE AFFORDED BY THE POLICIES BELOW. THIS CERTIFICATE OF INSURANCE DOES NOT CONSTITUTE A CONTRACT BETWEEN THE ISSUING INSURER(S), AUTHORIZED REPRESENTATIVE OR PRODUCER, AND THE CERTIFICATE HOLDER.

IMPORTANT: If the certificate holder is an ADDITIONAL INSURED, the policy(ies) must be endorsed. If SUBROGATION IS WAIVED, subject to the terms and conditions of the policy, certain policies may require an endorsement. A statement on this certificate does not confer rights to the certificate holder in lieu of such endorsement(s).

PRODUCER
J.Krug & Associates, Inc.
One Pierce Place Suite 1250W
Itasca, IL 60143
Jeffrey Schulz, CIC, CRM

CONTACT NAME: J.Krug & Associates, Inc.
PHONE (A/C, No, Ext): 847-392-8585 FAX (A/C, No): 847-392-8137
E-MAIL ADDRESS:
PRODUCER CUSTOMER ID #: VIRGI-1

| INSURER(S) AFFORDING COVERAGE | NAIC # |
|---|---|
| INSURER A : Hartford Insurance Company | 19682 |
| INSURER B : Lloyds of London | 15792 |
| INSURER C : | |
| INSURER D : | |
| INSURER E : | |
| INSURER F : | |

INSURED
Virgilio and Associates, Ltd.
24069 North Echo Lake Road
Lake Zurich, IL 60047-0991

COVERAGES CERTIFICATE NUMBER: REVISION NUMBER:

THIS IS TO CERTIFY THAT THE POLICIES OF INSURANCE LISTED BELOW HAVE BEEN ISSUED TO THE INSURED NAMED ABOVE FOR THE POLICY PERIOD INDICATED. NOTWITHSTANDING ANY REQUIREMENT, TERM OR CONDITION OF ANY CONTRACT OR OTHER DOCUMENT WITH RESPECT TO WHICH THIS CERTIFICATE MAY BE ISSUED OR MAY PERTAIN, THE INSURANCE AFFORDED BY THE POLICIES DESCRIBED HEREIN IS SUBJECT TO ALL THE TERMS, EXCLUSIONS AND CONDITIONS OF SUCH POLICIES. LIMITS SHOWN MAY HAVE BEEN REDUCED BY PAID CLAIMS.

| INSR LTR | TYPE OF INSURANCE | ADDL INSR | SUBR WVD | POLICY NUMBER | POLICY EFF (MM/DD/YYYY) | POLICY EXP (MM/DD/YYYY) | LIMITS | |
|---|---|---|---|---|---|---|---|---|
| A | GENERAL LIABILITY<br>X COMMERCIAL GENERAL LIABILITY<br>CLAIMS-MADE X OCCUR<br>GEN'L AGGREGATE LIMIT APPLIES PER:<br>POLICY X PRO-JECT LOC | X | | 83 SBA FO4397 | 12/01/2018 | 12/01/2019 | EACH OCCURRENCE | $ 2,000,000 |
| | | | | | | | DAMAGE TO RENTED PREMISES (Ea occurrence) | $ 1,000,000 |
| | | | | | | | MED EXP (Any one person) | $ 10,000 |
| | | | | | | | PERSONAL & ADV INJURY | $ 2,000,000 |
| | | | | | | | GENERAL AGGREGATE | $ 4,000,000 |
| | | | | | | | PRODUCTS - COMP/OP AGG | $ 4,000,000 |
| | | | | | | | | $ |
| A | AUTOMOBILE LIABILITY<br>X ANY AUTO<br>ALL OWNED AUTOS<br>SCHEDULED AUTOS<br>A X HIRED AUTOS<br>A X NON-OWNED AUTOS | | | 83UECPY9590 | 10/21/2018 | 10/21/2019 | COMBINED SINGLE LIMIT (Ea accident) | $ 1,000,000 |
| | | | | | | | BODILY INJURY (Per person) | $ |
| | | | | | | | BODILY INJURY (Per accident) | $ |
| | | | | 83UECPY9590 | 10/21/2018 | 10/21/2019 | PROPERTY DAMAGE (PER ACCIDENT) | $ |
| | | | | | | | | $ |
| | | | | | | | | $ |
| | UMBRELLA LIAB OCCUR<br>EXCESS LIAB CLAIMS-MADE<br>DEDUCTIBLE<br>RETENTION $ | | | | | | EACH OCCURRENCE | $ |
| | | | | | | | AGGREGATE | $ |
| | | | | | | | | $ |
| | | | | | | | | $ |
| A | WORKERS COMPENSATION AND EMPLOYERS' LIABILITY<br>ANY PROPRIETOR/PARTNER/EXECUTIVE OFFICER/MEMBER EXCLUDED? Y/N Y<br>(Mandatory in NH)<br>If yes, describe under DESCRIPTION OF OPERATIONS below | N/A | | 83WECBT5557 | 11/04/2018 | 11/04/2019 | X WC STATU-TORY LIMITS OTH-ER | |
| | | | | | | | E.L. EACH ACCIDENT | $ 1,000,000 |
| | | | | | | | E.L. DISEASE - EA EMPLOYEE | $ 1,000,000 |
| | | | | | | | E.L. DISEASE - POLICY LIMIT | $ 1,000,000 |
| B | Professional Liabi | | | 10424L180373 | 12/03/2018 | 12/03/2019 | Occurence | 2,000,000 |
| | | | | | | | Aggregate | 2,000,000 |

DESCRIPTION OF OPERATIONS / LOCATIONS / VEHICLES (Attach ACORD 101, Additional Remarks Schedule, if more space is required)
ISTHA Contract I-18-4428 BNSF Bridge Reconstruction. Item #52200800 - Segmental Concrete Block Wall.

CERTIFICATE HOLDER

WALCONC

Walsh Construction Company
II, LLC
929 West Adams Street
Chicago, IL 60607

CANCELLATION

SHOULD ANY OF THE ABOVE DESCRIBED POLICIES BE CANCELLED BEFORE THE EXPIRATION DATE THEREOF, NOTICE WILL BE DELIVERED IN ACCORDANCE WITH THE POLICY PROVISIONS.

AUTHORIZED REPRESENTATIVE
[redacted]

© 1988-2009 ACORD CORPORATION. All rights reserved.



The ACORD name and logo are registered marks of ACORD

ELECTRIC CONDUIT
CONSTRUCTION
ABOVE · BELOW · BEYOND

July 22, 2019

*Brian Fidoruk, P.E.*
***Project Manager***
*Walsh Construction*
*6438 Joliet Road, Suite 103*
*Countryside Illinois, 60525*

**RE: Professional Liability Insurance**

Electric Conduit currently carries Professional Liability insurance and promises to carry this insurance during the design build portion of project "I-18-4428 - BNSF Bridge" for the pay items "JT1300707 Standby Generator and Automatic Transfer Switch and JT1300708 Temporary Portable Generator" Electric Conduit hereby warranties that it will also carry Professional Liability insurance for a period of not less than 5 years from completion of this project.

Thank you for your consideration,

**Tim Pfleeger**

[redacted]

**President**

ACORD®

# CERTIFICATE OF LIABILITY INSURANCE

DATE (MM/DD/YYYY): 7/26/2019

THIS CERTIFICATE IS ISSUED AS A MATTER OF INFORMATION ONLY AND CONFERS NO RIGHTS UPON THE CERTIFICATE HOLDER. THIS CERTIFICATE DOES NOT AFFIRMATIVELY OR NEGATIVELY AMEND, EXTEND OR ALTER THE COVERAGE AFFORDED BY THE POLICIES BELOW. THIS CERTIFICATE OF INSURANCE DOES NOT CONSTITUTE A CONTRACT BETWEEN THE ISSUING INSURER(S), AUTHORIZED REPRESENTATIVE OR PRODUCER, AND THE CERTIFICATE HOLDER.

**IMPORTANT:** If the certificate holder is an ADDITIONAL INSURED, the policy(ies) must have ADDITIONAL INSURED provisions or be endorsed. If SUBROGATION IS WAIVED, subject to the terms and conditions of the policy, certain policies may require an endorsement. A statement on this certificate does not confer rights to the certificate holder in lieu of such endorsement(s).

PRODUCER
Assurance Agency, Ltd
1750 E Golf Road
Suite 1100
Schaumburg IL 60173

CONTACT NAME: Asmaa Elewa
PHONE (A/C, No, Ext): (847) 598-8723 FAX (A/C, No): (847) 440-9123
E-MAIL ADDRESS: aelewa@assuranceagency.com

| INSURER(S) AFFORDING COVERAGE | NAIC # |
|---|---|
| INSURER A : Liberty Mutual Fire Insurance Company | 23035 |
| INSURER B : Liberty Insurance Corp. | 42404 |
| INSURER C : Accident Fund General Ins. Co. | 12304 |
| INSURER D : Tokio Marine Specialty Insuran | 23850 |
| INSURER E : Travelers Property Casualty | 25674 |
| INSURER F : | |

INSURED ELECCON-01
Electric Conduit Construction Co.
d/b/a Midwestern Contractors of Illinois
816 Hicks Drive
Elburn IL 60119

**COVERAGES** **CERTIFICATE NUMBER:** 413529483 **REVISION NUMBER:**

THIS IS TO CERTIFY THAT THE POLICIES OF INSURANCE LISTED BELOW HAVE BEEN ISSUED TO THE INSURED NAMED ABOVE FOR THE POLICY PERIOD INDICATED. NOTWITHSTANDING ANY REQUIREMENT, TERM OR CONDITION OF ANY CONTRACT OR OTHER DOCUMENT WITH RESPECT TO WHICH THIS CERTIFICATE MAY BE ISSUED OR MAY PERTAIN, THE INSURANCE AFFORDED BY THE POLICIES DESCRIBED HEREIN IS SUBJECT TO ALL THE TERMS, EXCLUSIONS AND CONDITIONS OF SUCH POLICIES. LIMITS SHOWN MAY HAVE BEEN REDUCED BY PAID CLAIMS.

| INSR LTR | TYPE OF INSURANCE | ADDL INSD | SUBR WVD | POLICY NUMBER | POLICY EFF (MM/DD/YYYY) | POLICY EXP (MM/DD/YYYY) | LIMITS | |
|---|---|---|---|---|---|---|---|---|
| A | X COMMERCIAL GENERAL LIABILITY<br>CLAIMS-MADE X OCCUR<br>GEN'L AGGREGATE LIMIT APPLIES PER:<br>POLICY X PRO-JECT LOC<br>OTHER: | | | TB2Z41444381019 | 5/31/2019 | 5/31/2020 | EACH OCCURRENCE<br>DAMAGE TO RENTED PREMISES (Ea occurrence)<br>MED EXP (Any one person)<br>PERSONAL & ADV INJURY<br>GENERAL AGGREGATE<br>PRODUCTS - COMP/OP AGG | $ 1,000,000<br>$ 100,000<br>$ 5,000<br>$ 1,000,000<br>$ 2,000,000<br>$ 2,000,000<br>$ |
| A | AUTOMOBILE LIABILITY<br>X ANY AUTO<br>OWNED AUTOS ONLY<br>X HIRED AUTOS ONLY<br>SCHEDULED AUTOS<br>X NON-OWNED AUTOS ONLY | | | AS2Z41444381029 | 5/31/2019 | 5/31/2020 | COMBINED SINGLE LIMIT (Ea accident)<br>BODILY INJURY (Per person)<br>BODILY INJURY (Per accident)<br>PROPERTY DAMAGE (Per accident) | $ 1,000,000<br>$<br>$<br>$<br>$ |
| B | X UMBRELLA LIAB X OCCUR<br>EXCESS LIAB CLAIMS-MADE<br>DED X RETENTION $ 10,000 | | | TH7Z41444381039 | 5/31/2019 | 5/31/2020 | EACH OCCURRENCE<br>AGGREGATE | $ 20,000,000<br>$ 20,000,000<br>$ |
| C | WORKERS COMPENSATION AND EMPLOYERS' LIABILITY<br>ANYPROPRIETOR/PARTNER/EXECUTIVE OFFICER/MEMBER EXCLUDED? (Mandatory in NH) Y/N N<br>If yes, describe under DESCRIPTION OF OPERATIONS below | N/A | | WCS750021605 | 5/31/2019 | 5/31/2020 | X PER STATUTE OTH-ER<br>E.L. EACH ACCIDENT<br>E.L. DISEASE - EA EMPLOYEE<br>E.L. DISEASE - POLICY LIMIT | <br>$ 1,000,000<br>$ 1,000,000<br>$ 1,000,000 |
| D<br>D<br>E | Pollution Liability<br>Professional Liability<br>Leased & Rented Equip. | | | PPK1983901<br>PPK1983901<br>QT6606K833141TIL19 | 5/31/2019<br>5/31/2019<br>5/31/2019 | 5/31/2020<br>5/31/2020<br>5/31/2020 | Per Occ./Aggr.:<br>Each Claim/Aggr.:<br>Limit: | $10,000,000<br>$2,000,000<br>$2,500,000 |

DESCRIPTION OF OPERATIONS / LOCATIONS / VEHICLES (ACORD 101, Additional Remarks Schedule, may be attached if more space is required)
Professional Liability is written on a claims made form.
RE: JT1300707 Standby Generator and Automatic Transfer Switch
JT1300708 Temporary Portable Generator (Tollway I-18-4428 BNSF Bridge)

**CERTIFICATE HOLDER**

Walsh Construction Company II, LLC
929 W Adams Street
Chicago IL 60607

**CANCELLATION**

SHOULD ANY OF THE ABOVE DESCRIBED POLICIES BE CANCELLED BEFORE THE EXPIRATION DATE THEREOF, NOTICE WILL BE DELIVERED IN ACCORDANCE WITH THE POLICY PROVISIONS.

AUTHORIZED REPRESENTATIVE
[redacted]

© 1988-2015 ACORD CORPORATION. All rights reserved.



The ACORD name and logo are registered marks of ACORD

Policy Number TB2-Z41-444381-019
Issued by Liberty Mutual Fire Insurance Co.

**THIS ENDORSEMENT CHANGES THE POLICY. PLEASE READ IT CAREFULLY.**

**COMMERCIAL GENERAL LIABILITY**
**ADDITIONAL INSURED ENHANCEMENT FOR CONTRACTORS**

This endorsement modifies insurance provided under the following:

COMMERCIAL GENERAL LIABILITY COVERAGE PART

Index of modified items:


Item 1. **Blanket Additional Insured Where Required By Written Agreement**
Lessors of Leased Equipment
Managers or Lessors of Premises
Mortgagees, Assignees or Receivers
Owners, Lessees or Contractors
Architects, Engineers or Surveyors
Any Person or Organization
Item 2. **Blanket Additional Insured – Grantor Of Permits**
Item 3. **Other Insurance Amendment**


Item 1. **Blanket Additional Insured Where Required By Written Agreement**

Paragraph 2. of Section II – Who Is An Insured is amended to add the following:

Additional Insured by Written Agreement

The following are insureds under the policy when you have agreed in a written agreement to provide them coverage as additional insureds under your policy:

1. **Lessors of Leased Equipment**: The person(s) or organization(s) from whom you lease equipment, but only with respect to liability for "bodily injury", "property damage" or "personal and advertising injury" caused, in whole or in part, by your maintenance, operation or use of equipment leased to you by such person(s) or organization(s).

   This insurance does not apply to any "occurrence" which takes place after the equipment lease expires.

2. **Managers or Lessors of Premises**: Any manager(s) or lessor(s) of premises leased to you in which the written lease agreement obligates you to procure additional insured coverage.

   The coverage afforded to the additional insured is limited to liability in connection with the ownership, maintenance or use of the premises leased to you and caused, in whole or in part, by some negligent act(s) or omission(s) of you, your "employees", your agents or your subcontractors. There is no coverage for the additional insured for liability arising out of the sole negligence of the additional insured or those acting on behalf of the additional insured, except as provided below.

   If the written agreement obligates you to procure additional insured coverage for the additional insured's sole negligence, then the coverage for the additional insured shall conform to the agreement, but only if the applicable law would allow you to indemnify the additional insured for liability arising out of the additional insured's sole negligence.



© 2016 Liberty Mutual Insurance
Includes copyrighted material of Insurance Services Office, Inc., with its permission.

This insurance does not apply to:

a. Any "occurrence" which takes place after you cease to be a tenant in that premises or to lease that land;

b. Structural alterations, new construction or demolition operations performed by or on behalf of that manager or lessor; or

c. Any premises for which coverage is excluded by endorsement.

3. **Mortgagees, Assignees or Receivers**: Any person(s) or organization(s) with respect to their liability as mortgagee, assignee or receiver and arising out of your ownership, maintenance or use of the premises.

   This insurance does not apply to structural alterations, new construction and demolition operations performed by or on behalf of such person(s) or organization(s).

4. **Owners, Lessees or Contractors**: Any person(s) or organization(s) to whom you are obligated to procure additional insured coverage, but only with respect to liability for "bodily injury", "property damage" or "personal and advertising injury" caused, in whole or in part, by your act(s) or omission(s) or the act(s) or omission(s) of your "employees", your agents, or your subcontractors, in the performance of your ongoing operations.

   This insurance does not apply to "bodily injury", "property damage", or "personal and advertising injury" arising out of "your work" included in the "products-completed operations hazard" unless you are required to provide such coverage for the additional insured by the written agreement, and then only for the period of time required by the written agreement and only for liability caused, in whole or in part, by your act(s) or omission(s) or the act(s) or omission(s) of your "employees", your agents, or your subcontractors.

   There is no coverage for the additional insured for liability arising out of the sole negligence of the additional insured or those acting on behalf of the additional insured, except as provided below.

   If the written agreement obligates you to procure additional insured coverage for the additional insured's sole negligence, then the coverage for the additional insured shall conform to the agreement, but only if the applicable law would allow you to indemnify the additional insured for liability arising out the additional insured's sole negligence.

   This insurance does not apply to "bodily injury", "property damage" or "personal and advertising injury" arising out of the rendering of, or failure to render, any professional architectural, engineering or surveying services, including:

   a. The preparing, approving, or failing to prepare or approve, maps, shop drawings, opinions, reports, surveys, field orders, change orders or drawings and specifications; or

   b. Supervisory, inspection, architectural or engineering activities.

   This exclusion applies even if the claims against any insured allege negligence or other wrongdoing in the supervision, hiring, employment, training or monitoring of others by that insured, if the "occurrence" which caused the "bodily injury" or "property damage", or the offense which caused the "personal and advertising injury", involved the rendering of or failure to render any professional services.

5. **Architects, Engineers or Surveyors**: Any architect, engineer, or surveyor engaged by you but only with respect to liability for "bodily injury", "property damage" or "personal and advertising injury" caused, in whole or in part, by your act(s) or omission(s) or the act(s) or omission(s) of those acting on your behalf:

   a. In connection with your premises; or

   b. In the performance of your ongoing operations.

   This insurance does not apply to "bodily injury", "property damage" or "personal and advertising injury" arising out of the rendering of or failure to render any professional services by or for you, including:


© 2016 Liberty Mutual Insurance
Includes copyrighted material of Insurance Services Office, Inc., with its permission.

a. The preparing, approving, or failing to prepare or approve, maps, shop drawings, opinions, reports, surveys, field orders, change orders or drawings and specifications; or

b. Supervisory, inspection, architectural or engineering activities.

This exclusion applies even if the claims against any insured allege negligence or other wrongdoing in the supervision, hiring, employment, training or monitoring of others by that insured, if the "occurrence" which caused the "bodily injury" or "property damage", or the offense which caused the "personal and advertising injury", involved the rendering of or failure to render any professional services by or for you.

6. **Any Person or Organization Other Than a Joint Venture:** Any person(s) or organization(s) (other than a joint venture of which you are a member) for whom you are obligated to procure additional insured coverage, but only with respect to liability for "bodily injury", "property damage" or "personal and advertising injury" caused, in whole or in part, by your act(s) or omission(s) or the act(s) or omission(s) of those acting on your behalf:

   a. In the performance of your ongoing operations; or

   b. In connection with premises owned by or rented to you.

   This insurance does not apply to:

   a. Any person(s) or organization(s) more specifically covered in Paragraphs 1 through 5 above;

   b. Any construction, renovation, demolition or installation operations performed by or on behalf of you, or those operating on your behalf; or

   c. Any person(s) or organization(s) whose profession, business or occupation is that of an architect, surveyor or engineer with respect to liability arising out of the rendering of, or failure to render, any professional architectural, engineering or surveying services, including:

      (1) The preparing, approving or failing to prepare or approve, maps, drawings, opinions, reports, surveys, field orders, change orders, designs and specifications; or

      (2) Supervisory, inspection, architectural or engineering activities.

   This exclusion applies even if the claims against any insured allege negligence or other wrongdoing in the supervision, hiring, employment, training or monitoring of others by that insured, if the "occurrence" which caused the "bodily injury" or "property damage", or the offense which caused the "personal and advertising injury", involved the rendering of or failure to render any professional services by or on behalf of you, or those operating on your behalf.

The insurance afforded to any person(s) or organization(s) as an insured under this Item 1:

1. Applies to the extent permitted by law;

2. Applies only to the scope of coverage and the minimum limits of insurance required by the written agreement, but in no event exceeds either the scope of coverage or the limits of insurance provided by this policy;

3. Does not apply to any person(s) or organization(s) for any "bodily injury", "property damage" or "personal and advertising injury" if any other additional insured endorsement attached to this policy applies to such person(s) or organization(s) with regard to the "bodily injury", "property damage" or "personal and advertising injury";

4. Applies only if the "bodily injury" or "property damage" occurs, or the offense giving rise to the "personal and advertising injury" is committed, subsequent to the execution of the written agreement; and

5. Applies only if the written agreement is in effect at the time the "bodily injury" or "property damage" occurs, or at the time the offense giving rise to the "personal and advertising injury" is committed.


© 2016 Liberty Mutual Insurance
Includes copyrighted material of Insurance Services Office, Inc., with its permission.

Item 2. **Blanket Additional Insured – Grantor Of Permits**

Paragraph 2. of Section II - Who Is An Insured is amended to add the following:

Any state, municipality or political subdivision that has issued you a permit in connection with any operations performed by you or on your behalf, or in connection with premises you own, rent or control, and to which this insurance applies, but only to the extent that you are required to provide additional insured status to the state, municipality or political subdivision as a condition of receiving and maintaining the permit. Such state, municipality or political subdivision that has issued you a permit is an insured only with respect to their liability as grantor of such permit to you.

However, with respect to the state, municipality or political subdivision:

1. Coverage will be no broader than required; and

2. Limits of insurance will not exceed the minimum limits of insurance required as a condition for receiving or maintaining the permit;

but neither the scope of coverage nor the limits of insurance will exceed those provided by this policy.

This insurance does not apply to:

1. "Bodily injury", "property damage" or "personal and advertising injury" arising out of operations performed for the state, municipality or political subdivision;

2. Any "bodily injury" or "property damage" included within the "products-completed operations hazard", except when required by written agreement initiated prior to loss; or

3. "Bodily injury", "property damage" or "personal and advertising injury", unless negligently caused, in whole or in part, by you or those acting on your behalf.

Item 3. **Other Insurance Amendment**

If you are obligated under a written agreement to provide liability insurance on a primary, excess, contingent, or any other basis for any person(s) or organization(s) that qualifies as an additional insured on this policy, this policy will apply solely on the basis required by such written agreement and Paragraph 4. Other Insurance of Section IV – Commercial General Liability Conditions will not apply. Where the applicable written agreement does not specify on what basis the liability insurance will apply, the provisions of Paragraph 4. Other Insurance of Section IV – Commercial General Liability Conditions will apply. However, this insurance is excess over any other insurance available to the additional insured for which it is also covered as an additional insured by attachment of an endorsement to another policy providing coverage for the same "occurrence", claim or "suit".


© 2016 Liberty Mutual Insurance
Includes copyrighted material of Insurance Services Office, Inc., with its permission.

Policy Number TB2-Z41-444381-019
Issued by Liberty Mutual Fire Insurance Co.

**THIS ENDORSEMENT CHANGES THE POLICY. PLEASE READ IT CAREFULLY.**

**COMMERCIAL GENERAL LIABILITY ENHANCEMENT FOR CONTRACTORS**

This endorsement modifies insurance provided under the following:

COMMERCIAL GENERAL LIABILITY COVERAGE PART

Index of modified items:


Item 1. **Reasonable Force**
Item 2. **Non-Owned Watercraft Extension**
Item 3. **Damage To Premises Rented To You – Expanded Coverage**
Item 4. **Bodily Injury To Co-Employees**
Item 5. **Knowledge Of Occurrence Or Offense**
Item 6. **Notice Of Occurrence Or Offense**
Item 7. **Unintentional Failure To Disclose**
Item 8. **Bodily Injury Redefined**
Item 9. **Supplementary Payments – Increased Limits**
Item 10. **Property In Your Care, Custody Or Control**
Item 11. **Mobile Equipment Redefined**
Item 12. **Newly Formed Or Acquired Entities**
Item 13. **Waiver Of Right Of Recovery By Written Contract Or Agreement**
Item 14. **Contractual Liability – Railroads**


Item 1. **Reasonable Force**

Exclusion a. of Section I – Coverage A – Bodily Injury And Property Damage Liability is replaced by the following:

a. Expected Or Intended Injury

"Bodily injury" or "property damage" expected or intended from the standpoint of the insured. This exclusion does not apply to "bodily injury" or "property damage" resulting from the use of reasonable force to protect persons or property.

Item 2. **Non-Owned Watercraft Extension**

Paragraph (2) of Exclusion g. of Section I – Coverage A – Bodily Injury And Property Damage Liability is replaced by the following:

(2) A watercraft you do not own that is:

(a) Less than 55 feet long; and

(b) Not being used to carry persons or property for a charge;

Item 3. **Damage To Premises Rented To You – Expanded Coverage**

A. The final paragraph of 2. Exclusions of Section I – Coverage A – Bodily Injury And Property Damage Liability is replaced by the following:



© 2016 Liberty Mutual Insurance
Includes copyrighted material of Insurance Services Office, Inc., with its permission.

Exclusions c. through n. do not apply to damage by fire, lightning or explosion or subsequent damages resulting from such fire, lightning or explosion including water damage to premises while rented to you or temporarily occupied by you with permission of the owner. A separate limit of insurance applies to this coverage as described in Section III – Limits Of Insurance.

B. Paragraph 6. of Section III – Limits Of Insurance is replaced by the following:

6. Subject to Paragraph 5. above, the Damage To Premises Rented To You Limit is the most we will pay under Coverage A for damages because of "property damage" to any one premises, while rented to you, or in the case of damage by fire, lightning, explosion or subsequent damages resulting from such fire, lightning or explosion including water damage to premises while rented to you or temporarily occupied by you with permission of the owner.

The Damage To Premises Rented To You Limit is the greater of:

a. $300,000; or

b. The Damage To Premises Rented To You Limit shown on the Declarations.

C. Paragraph 9.a. of the definition of "insured contract" in Section V – Definitions is replaced by the following:

a. A contract for a lease of premises. However, that portion of the contract for a lease of premises that indemnifies any person or organization for damage by fire, lightning, explosion or subsequent damages resulting from such fire, lightning or explosion including water damage to premises while rented to you or temporarily occupied by you with permission of the owner is not an "insured contract";

D. The paragraph immediately following Paragraph (6) of Exclusion j. of Section I – Coverage A – Bodily Injury And Property Damage Liability is replaced by the following:

Paragraphs (1), (3) and (4) of this exclusion do not apply to "property damage" (other than damage by fire, lightning or explosion or subsequent damages resulting from such fire, lightning or explosion including water damage) to premises, including the contents of such premises, rented to you for a period of seven or fewer consecutive days. A separate limit of insurance applies to Damage To Premises Rented To You as described in Section III – Limits of Insurance.

Item 4. **Bodily Injury To Co-Employees**

A. Paragraph 2. of Section II – Who Is An Insured is amended to include:

Each of the following is also an insured:

Your "employees" (other than either your "executive officers" (if you are an organization other than a partnership, joint venture or limited liability company) or your managers (if you are a limited liability company)) or "volunteer workers" are insureds while in the course of their employment or while performing duties related to the conduct of your business with respect to "bodily injury":

(1) To you;

(2) To your partners or members (if you are a partnership or joint venture);

(3) To your members (if you are a limited liability company); or

(4) To a co-"employee" or "volunteer worker" while that co-"employee" or "volunteer worker" is either in the course of his or her employment by you or while performing duties related to the conduct of your business (including participation in any recreational activities sponsored by you).

Paragraph 2.a.(1)(a) of Section II – Who Is An Insured does not apply to "bodily injury" for which insurance is provided by this paragraph.


© 2016 Liberty Mutual Insurance
Includes copyrighted material of Insurance Services Office, Inc., with its permission.

B. The insurance provided by this Item 4. for "bodily injury" to a co-"employee" or "volunteer worker" will not apply if the injured co-"employee's" or "volunteer worker's" sole remedy for such injury is provided under a workers' compensation law or any similar law.

C. Other Insurance

The insurance provided by this Item 4. is excess over any other valid and collectible insurance available to the insured, whether primary, excess, contingent or on any other basis.

Item 5. **Knowledge Of Occurrence Or Offense**

Knowledge of an "occurrence" or offense by your agent, servant or "employee" will not in itself constitute knowledge by you unless your "executive officer" or "employee" designated by you to notify us of an "occurrence" or offense has knowledge of the "occurrence" or offense.

Item 6. **Notice Of Occurrence Or Offense**

For purposes of Paragraph 2.a. of Section IV – Commercial General Liability Conditions, you refers to your "executive officer" or "employee" that you have designated to give us notice.

Item 7. **Unintentional Failure To Disclose**

Unintentional failure of the Named Insured to disclose all hazards existing at the inception of this policy shall not be a basis for denial of any coverage afforded by this policy. However, you must report such an error or omission to us as soon as practicable after its discovery.

This provision does not affect our right to collect additional premium or exercise our right of cancellation or non-renewal.

Item 8. **Bodily Injury Redefined**

The definition of "bodily injury" in Section V – Definitions is replaced by the following:

"Bodily injury" means:

a. Bodily injury, sickness or disease sustained by a person, including death resulting from any of these at any time; and

b. Mental anguish, shock or humiliation arising out of injury as defined in Paragraph a. above. Mental anguish means any type of mental or emotional illness or distress.

Item 9. **Supplementary Payments – Increased Limits**

Paragraphs 1.b. and 1.d. of Section I – Supplementary Payments – Coverages A And B are replaced by the following:

b. Up to $3,000 for the cost of bail bonds required because of accidents or traffic law violations arising out of the use of any vehicle to which Bodily Injury Liability Coverage applies. We do not have to furnish these bonds.

d. All reasonable expenses incurred by the insured at our request to assist in the investigation or defense of the claim or "suit", including actual loss of earnings up to $500 a day because of time off from work.

Item 10. **Property In Your Care, Custody Or Control**

A. Paragraphs (3) and (4) of Exclusion j. of Section I – Coverage A – Bodily Injury And Property Damage Liability are deleted.

B. Additional Exclusion


© 2016 Liberty Mutual Insurance
Includes copyrighted material of Insurance Services Office, Inc., with its permission.

Coverage provided by this endorsement does not apply to "property damage" to property while in transit.

C. Limits of Insurance

Subject to Paragraphs 2., 3., and 5. of Section III – Limits Of Insurance, the most we will pay for insurance provided by Paragraph A. above is:

$10,000 Each Occurrence Limit

$75,000 Aggregate Limit

The Each Occurrence Limit for this coverage applies to all damages as a result of any one "occurrence" regardless of the number of persons or organizations who sustain damage because of that "occurrence".

The Aggregate Limit is the most we will pay for the sum of all damages under this Item 10.

D. Other Insurance

This insurance does not apply to any portion of a loss for which the insured has available any other valid and collectible insurance, whether primary, excess, contingent, or on any other basis, unless such other insurance was specifically purchased by the insured to apply in excess of this policy.

Item 11. **Mobile Equipment Redefined**

The definition of "mobile equipment" in Section V – Definitions is amended to include self-propelled vehicles with permanently attached equipment less than 1000 pounds gross vehicle weight that are primarily designed for:

(1) Snow removal;

(2) Road maintenance, but not construction or resurfacing; or

(3) Street cleaning.

Item 12. **Newly Formed Or Acquired Entities**

A. Paragraph 3. of Section II – Who Is An Insured is replaced by the following:

3. Any organization you newly acquire or form, other than a partnership or joint venture, and over which you maintain majority ownership or majority interest, will qualify as a Named Insured if there is no other similar insurance available to that organization. However:

a. Coverage under this provision is afforded only until:

(1) The 180th day after you acquire or form the organization;

(2) Separate coverage is purchased for the organization; or

(3) The end of the policy period

whichever is earlier;

b. Section I – Coverage A – Bodily Injury And Property Damage Liability does not apply to "bodily injury" or "property damage" that occurred before you acquired or formed the organization; and

c. Section I – Coverage B – Personal And Advertising Injury Liability does not apply to "personal and advertising injury" arising out of an offense committed before you acquired or formed the organization.

B. The insurance afforded to any organization as a Named Insured under this Item 12. does not apply if a Broad Form Named Insured endorsement attached to this policy applies to that organization.


© 2016 Liberty Mutual Insurance
Includes copyrighted material of Insurance Services Office, Inc., with its permission.

Item 13. **Waiver Of Right Of Recovery By Written Contract Or Agreement**

The following is added to Paragraph 8. Transfer Of Rights Of Recovery Against Others To Us of Section IV – Commercial General Liability Conditions:

We waive any right of recovery because of payments we make under this policy for injury or damage arising out of your ongoing operations or "your work" included in the "products-completed operations hazard" that we may have against any person or organization with whom you have agreed in a written contract or agreement to waive your rights of recovery but only if the "bodily injury" or "property damage" occurs, or offense giving rise to "personal and advertising injury" is committed subsequent to the execution of the written contract or agreement.

Item 14. **Contractual Liability – Railroads**

Paragraph 9. of Section V – Definitions is replaced by the following:

9. "Insured contract" means:

   a. A contract for a lease of premises. However, that portion of the contract for a lease of premises that indemnifies any person or organization for damage by fire, lightning, explosion or subsequent damages resulting from such fire, lightning or explosion including water damage to premises while rented to you or temporarily occupied by you with permission of the owner is not an "insured contract";

   b. A sidetrack agreement;

   c. Any easement or license agreement;

   d. An obligation, as required by ordinance, to indemnify a municipality, except in connection with work for a municipality;

   e. An elevator maintenance agreement;

   f. That part of any other contract or agreement pertaining to your business (including an indemnification of a municipality in connection with work performed for a municipality) under which you assume the tort liability of another party to pay for "bodily injury" or "property damage" to a third person or organization. Tort liability means a liability that would be imposed by law in the absence of any contract or agreement.

      Paragraph f. does not include that part of any contract or agreement:

      (1) That indemnifies an architect, engineer or surveyor for injury or damage arising out of:

         (a) Preparing, approving or failing to prepare or approve maps, shop drawings, opinions, reports, surveys, field orders, change orders or drawings and specifications; or

         (b) Giving directions or instructions, or failing to give them, if that is the primary cause of the injury or damage;

      (2) Under which the insured, if an architect, engineer or surveyor, assumes liability for an injury or damage arising out of the insured's rendering or failing to render professional services, including those listed in Paragraph (1) above and supervisory, inspection, architectural or engineering activities.


© 2016 Liberty Mutual Insurance
Includes copyrighted material of Insurance Services Office, Inc., with its permission.

THIS ENDORSEMENT CHANGES THE POLICY. PLEASE READ IT CAREFULLY.

# DESIGNATED INSURED FOR COVERED AUTOS LIABILITY COVERAGE

This endorsement modifies insurance provided under the following:

AUTO DEALERS COVERAGE FORM
BUSINESS AUTO COVERAGE FORM
MOTOR CARRIER COVERAGE FORM

With respect to coverage provided by this endorsement, the provisions of the Coverage Form apply unless modified by the endorsement.

This endorsement identifies person(s) or organization(s) who are "insureds" for Covered Autos Liability Coverage under the Who Is An Insured provision of the Coverage Form. This endorsement does not alter coverage provided in the Coverage Form.

**SCHEDULE**

| Name Of Person(s) Or Organization(s): |
|---|
| Any person or organization whom you have agreed in writing to add as an additional insured, but only to coverage and minimum limits of insurance required by the written agreement, and in no event to exceed either the scope of coverage or the limits of insurance provided in this policy. |
| Information required to complete this Schedule, if not shown above, will be shown in the Declarations. |

Each person or organization shown in the Schedule is an "insured" for Covered Autos Liability Coverage, but only to the extent that person or organization qualifies as an "insured" under the Who Is An Insured provision contained in Paragraph **A.1.** of Section II - Covered Autos Liability Coverage in the Business Auto and Motor Carrier Coverage Forms and Paragraph **D.2.** of Section I - Covered Autos Coverages of the Auto Dealers Coverage Form.


© Insurance Services Office, Inc., 2011

THIS ENDORSEMENT CHANGES THE POLICY. PLEASE READ IT CAREFULLY.

# WAIVER OF TRANSFER OF RIGHTS OF RECOVERY AGAINST OTHERS TO US (WAIVER OF SUBROGATION)

This endorsement modifies insurance provided under the following:

AUTO DEALERS COVERAGE FORM
BUSINESS AUTO COVERAGE FORM
MOTOR CARRIER COVERAGE FORM

With respect to coverage provided by this endorsement, the provisions of the Coverage Form apply unless modified by the endorsement.

## SCHEDULE

| Name(s) Of Person(s) Or Organization(s): |
|---|
| Any person or organization for whom you perform work under a written contract if the contract requires you to obtain this agreement from us, but only if the contract is executed prior to the injury or damage occurring. |
| Premium: $ INCL |
| Information required to complete this Schedule, if not shown above, will be shown in the Declarations. |

The **Transfer Of Rights Of Recovery Against Others To Us** condition does not apply to the person(s) or organization(s) shown in the Schedule, but only to the extent that subrogation is waived prior to the "accident" or the "loss" under a contract with that person or organization.


© Insurance Services Office, Inc., 2011

## WAIVER OF OUR RIGHT TO RECOVER FROM OTHERS ENDORSEMENT

We have the right to recover our payments from anyone liable for an injury covered by this policy. We will not enforce our right against the person or organization named in the Schedule. (This agreement applies only to the extent that you perform work under a written contract that requires you to obtain this agreement from us.)

This agreement shall not operate directly or indirectly to benefit anyone not named in the Schedule.

Schedule

Any person or organization that you perform work for that is liable for an injury, covered by this policy, that prior to the injury has written contract requiring a waiver of our right to recover from them.

This endorsement changes the policy to which it is attached and is effective on the date issued unless otherwise stated.

**(The information below is required only when this endorsement is issued subsequent to preparation of the policy.)**

Endorsement Effective 05/31/2019 Policy No. WCS750021605 Endorsement No.

Insured Premium $

Electric Conduit Construction Co.

Insurance Company Countersigned by_____

Accident Fund General Insurance Co.


Copyright 1983 National Council on Compensation Insurance.

MINNICK
SERVICES
Fort Wayne • Indiana

July 19, 2019

Mr. Brian Fidoruk
Walsh Construction
929 West Adams Street
Chicago, Illinois 60607

RE: Tollway BNSF Project (4428) – Temporary Retaining Walls 1 & 4

Dear Mr. Fidoruk,

Minnick Services, Inc. warrants that its Certificate of Insurance for the pay item "52200700 – Precast Modular Retaining Wall" shall be maintained continuously for a period of not less than five years after the above-referenced project is complete.

Sincerely,
**MINNICK SERVICES, INC.**

[redacted]

Jani L. MacDowell, CPA
Chief Financial Officer

ACORD®

# CERTIFICATE OF LIABILITY INSURANCE

DATE (MM/DD/YYYY): 7/19/2019

THIS CERTIFICATE IS ISSUED AS A MATTER OF INFORMATION ONLY AND CONFERS NO RIGHTS UPON THE CERTIFICATE HOLDER. THIS CERTIFICATE DOES NOT AFFIRMATIVELY OR NEGATIVELY AMEND, EXTEND OR ALTER THE COVERAGE AFFORDED BY THE POLICIES BELOW. THIS CERTIFICATE OF INSURANCE DOES NOT CONSTITUTE A CONTRACT BETWEEN THE ISSUING INSURER(S), AUTHORIZED REPRESENTATIVE OR PRODUCER, AND THE CERTIFICATE HOLDER.

IMPORTANT: If the certificate holder is an ADDITIONAL INSURED, the policy(ies) must be endorsed. If SUBROGATION IS WAIVED, subject to the terms and conditions of the policy, certain policies may require an endorsement. A statement on this certificate does not confer rights to the certificate holder in lieu of such endorsement(s).

PRODUCER
The DeHayes Group
11118 Coldwater Rd.
Fort Wayne IN 46845

CONTACT NAME: Martha Kinast
PHONE (A/C, No, Ext): 260-969-8955 FAX (A/C, No): 260-376-7043
E-MAIL ADDRESS: martha@dehayes.com

| INSURER(S) AFFORDING COVERAGE | NAIC # |
|---|---|
| INSURER A : EMC Property and Casualty Insurance Company | 25186 |
| INSURER B : | |
| INSURER C : | |
| INSURER D : | |
| INSURER E : | |
| INSURER F : | |

INSURED MINNCON-01
Minnick Services Corporation
222 N Thomas Rd
Fort Wayne IN 46808

COVERAGES CERTIFICATE NUMBER: 758925921 REVISION NUMBER:

THIS IS TO CERTIFY THAT THE POLICIES OF INSURANCE LISTED BELOW HAVE BEEN ISSUED TO THE INSURED NAMED ABOVE FOR THE POLICY PERIOD INDICATED. NOTWITHSTANDING ANY REQUIREMENT, TERM OR CONDITION OF ANY CONTRACT OR OTHER DOCUMENT WITH RESPECT TO WHICH THIS CERTIFICATE MAY BE ISSUED OR MAY PERTAIN, THE INSURANCE AFFORDED BY THE POLICIES DESCRIBED HEREIN IS SUBJECT TO ALL THE TERMS, EXCLUSIONS AND CONDITIONS OF SUCH POLICIES. LIMITS SHOWN MAY HAVE BEEN REDUCED BY PAID CLAIMS.

| INSR LTR | TYPE OF INSURANCE | ADDL INSD | SUBR WVD | POLICY NUMBER | POLICY EFF (MM/DD/YYYY) | POLICY EXP (MM/DD/YYYY) | LIMITS | |
|---|---|---|---|---|---|---|---|---|
| A | X COMMERCIAL GENERAL LIABILITY | | | 5X59520 | 10/2/2018 | 10/2/2019 | EACH OCCURRENCE | $ 1,000,000 |
| | CLAIMS-MADE X OCCUR | | | | | | DAMAGE TO RENTED PREMISES (Ea occurrence) | $ 500,000 |
| | | | | | | | MED EXP (Any one person) | $ 10,000 |
| | | | | | | | PERSONAL & ADV INJURY | $ 1,000,000 |
| | GEN'L AGGREGATE LIMIT APPLIES PER: | | | | | | GENERAL AGGREGATE | $ 2,000,000 |
| | POLICY PRO-JECT X LOC | | | | | | PRODUCTS - COMP/OP AGG | $ 2,000,000 |
| | OTHER: | | | | | | | $ |
| A | AUTOMOBILE LIABILITY | | | 5X59520 | 10/2/2018 | 10/2/2019 | COMBINED SINGLE LIMIT (Ea accident) | $ 1,000,000 |
| | X ANY AUTO | | | | | | BODILY INJURY (Per person) | $ |
| | ALL OWNED AUTOS / SCHEDULED AUTOS | | | | | | BODILY INJURY (Per accident) | $ |
| | X HIRED AUTOS / X NON-OWNED AUTOS | | | | | | PROPERTY DAMAGE (Per accident) | $ |
| | | | | | | | | $ |
| A | X UMBRELLA LIAB X OCCUR | | | 5X59520 | 10/2/2018 | 10/2/2019 | EACH OCCURRENCE | $ 4,000,000 |
| | EXCESS LIAB CLAIMS-MADE | | | | | | AGGREGATE | $ 4,000,000 |
| | DED X RETENTION $ 0 | | | | | | | $ |
| A | WORKERS COMPENSATION AND EMPLOYERS' LIABILITY | | | 5X59520 | 10/2/2018 | 10/2/2019 | X PER STATUTE / OTH-ER | |
| | ANY PROPRIETOR/PARTNER/EXECUTIVE OFFICER/MEMBER EXCLUDED? (Mandatory in NH) Y / N: N / N/A | | | | | | E.L. EACH ACCIDENT | $ 1,000,000 |
| | If yes, describe under DESCRIPTION OF OPERATIONS below | | | | | | E.L. DISEASE - EA EMPLOYEE | $ 1,000,000 |
| | | | | | | | E.L. DISEASE - POLICY LIMIT | $ 1,000,000 |

DESCRIPTION OF OPERATIONS / LOCATIONS / VEHICLES (ACORD 101, Additional Remarks Schedule, may be attached if more space is required)
REF: 5220070-Precast Modular Retaining Wall (Tollway BNSF Project 4428; Temporary Retaining Walls 1 & 4)

CERTIFICATE HOLDER

Walsh Construction
929 West Adams Street
Chicago IL 60607

CANCELLATION

SHOULD ANY OF THE ABOVE DESCRIBED POLICIES BE CANCELLED BEFORE THE EXPIRATION DATE THEREOF, NOTICE WILL BE DELIVERED IN ACCORDANCE WITH THE POLICY PROVISIONS.

AUTHORIZED REPRESENTATIVE
[redacted]

© 1988-2014 ACORD CORPORATION. All rights reserved.



The ACORD name and logo are registered marks of ACORD

**Larson Engineering, Inc.**
1488 Bond Street, Suite 100
Naperville, IL 60563-6503
630.357.0540 Fax: 630.357.0164
www.larsonengr.com

**Larson**

July 11, 2019

The Illinois State Toll Highway Authority
2700 Ogden Ave.
Downers Grove, IL 60515

Re: ISTHA Contract No: I-18-4428

To Whom It May Concern:

This is to inform you that Larson Engineering, Inc. (LEI) will endeavor to carry professional liability coverage with a minimum of $2 million per claim and in aggregate, for a period of not less than 5 years after the completion date of our scope of work for contract I-18-4428, which includes the following:

- Performance Based Noise Abatement Wall (Precast Concrete) No. 1

This office of LEI has been in the engineering consulting business for 40 years and has maintained continuous professional liability coverage the entire time.

If you have any further questions regarding this matter, please feel free to contact our office.

Sincerely,
**Larson Engineering, Inc.**
[redacted]

Nancy H. Ferrini, S.E.
Senior Project Manager – Structural
nferrini@larsonengr.com

MBB:jlb

ACORD®

# CERTIFICATE OF LIABILITY INSURANCE

DATE (MM/DD/YYYY): 7/26/2019

THIS CERTIFICATE IS ISSUED AS A MATTER OF INFORMATION ONLY AND CONFERS NO RIGHTS UPON THE CERTIFICATE HOLDER. THIS CERTIFICATE DOES NOT AFFIRMATIVELY OR NEGATIVELY AMEND, EXTEND OR ALTER THE COVERAGE AFFORDED BY THE POLICIES BELOW. THIS CERTIFICATE OF INSURANCE DOES NOT CONSTITUTE A CONTRACT BETWEEN THE ISSUING INSURER(S), AUTHORIZED REPRESENTATIVE OR PRODUCER, AND THE CERTIFICATE HOLDER.

IMPORTANT: If the certificate holder is an ADDITIONAL INSURED, the policy(ies) must have ADDITIONAL INSURED provisions or be endorsed. If SUBROGATION IS WAIVED, subject to the terms and conditions of the policy, certain policies may require an endorsement. A statement on this certificate does not confer rights to the certificate holder in lieu of such endorsement(s).

PRODUCER
Cottingham & Butler
1770 Park Street, Suite 210
Naperville IL 60563

CONTACT NAME: L. Mark Spangler
PHONE (A/C, No, Ext): 630.420.3400 FAX (A/C, No): 630.420.8520
E-MAIL ADDRESS:

| INSURER(S) AFFORDING COVERAGE | NAIC # |
|---|---|
| INSURER A : Lexington Insurance Company | 19437 |
| INSURER B : The Phoenix Insurance Company | 25623 |
| INSURER C : Travelers Property Casualty Company of America | 25674 |
| INSURER D : Travelers Casualty and Surety Company | 19038 |
| INSURER E : Standard Fire Insurance Company | 19070 |
| INSURER F : | |

INSURED LARENG1
Larson Engineering, Inc.
1488 Bond Street
Naperville IL 60563

COVERAGES CERTIFICATE NUMBER: 926755263 REVISION NUMBER:

THIS IS TO CERTIFY THAT THE POLICIES OF INSURANCE LISTED BELOW HAVE BEEN ISSUED TO THE INSURED NAMED ABOVE FOR THE POLICY PERIOD INDICATED. NOTWITHSTANDING ANY REQUIREMENT, TERM OR CONDITION OF ANY CONTRACT OR OTHER DOCUMENT WITH RESPECT TO WHICH THIS CERTIFICATE MAY BE ISSUED OR MAY PERTAIN, THE INSURANCE AFFORDED BY THE POLICIES DESCRIBED HEREIN IS SUBJECT TO ALL THE TERMS, EXCLUSIONS AND CONDITIONS OF SUCH POLICIES. LIMITS SHOWN MAY HAVE BEEN REDUCED BY PAID CLAIMS.

| INSR LTR | TYPE OF INSURANCE | ADDL INSD | SUBR WVD | POLICY NUMBER | POLICY EFF (MM/DD/YYYY) | POLICY EXP (MM/DD/YYYY) | LIMITS | |
|---|---|---|---|---|---|---|---|---|
| B | X COMMERCIAL GENERAL LIABILITY<br>CLAIMS-MADE X OCCUR<br>GEN'L AGGREGATE LIMIT APPLIES PER:<br>POLICY X PRO-JECT LOC<br>OTHER | | | 6307K503961PHX18 | 4/23/2019 | 4/23/2020 | EACH OCCURRENCE<br>DAMAGE TO RENTED PREMISES (Ea occurrence)<br>MED EXP (Any one person)<br>PERSONAL & ADV INJURY<br>GENERAL AGGREGATE<br>PRODUCTS - COMP/OP AGG | $ 1,000,000<br>$ 1,000,000<br>$ 10,000<br>$ 1,000,000<br>$ 4,000,000<br>$ 2,000,000<br>$ |
| C | AUTOMOBILE LIABILITY<br>X ANY AUTO<br>OWNED AUTOS ONLY<br>X HIRED AUTOS ONLY<br>SCHEDULED AUTOS<br>X NON-OWNED AUTOS ONLY | | | BA9M29698A | 4/23/2019 | 4/23/2020 | COMBINED SINGLE LIMIT (Ea accident)<br>BODILY INJURY (Per person)<br>BODILY INJURY (Per accident)<br>PROPERTY DAMAGE (Per accident) | $ 1,000,000<br>$<br>$<br>$<br>$ |
| D | X UMBRELLA LIAB X OCCUR<br>EXCESS LIAB CLAIMS-MADE<br>DED X RETENTION $ 0 | | | CUP7K6081441843 | 4/23/2019 | 4/23/2020 | EACH OCCURRENCE<br>AGGREGATE | $ 10,000,000<br>$ 10,000,000<br>$ |
| E | WORKERS COMPENSATION AND EMPLOYERS' LIABILITY<br>ANYPROPRIETOR/PARTNER/EXECUTIVE OFFICER/MEMBER EXCLUDED? Y/N N<br>(Mandatory in NH)<br>If yes, describe under DESCRIPTION OF OPERATIONS below | N / A | | UB7K4852561843G | 4/23/2019 | 4/23/2020 | X PER STATUTE OTH-ER<br>E.L. EACH ACCIDENT<br>E.L. DISEASE - EA EMPLOYEE<br>E.L. DISEASE - POLICY LIMIT | <br>$ 1,000,000<br>$ 1,000,000<br>$ 1,000,000 |
| A | Professional Liability | | | 031711080 | 9/28/2018 | 9/28/2019 | Each Wrongful Act<br>Aggregate<br>Retention | $10,000,000<br>$10,000,000<br>$200,000 |

DESCRIPTION OF OPERATIONS / LOCATIONS / VEHICLES (ACORD 101, Additional Remarks Schedule, may be attached if more space is required)
Description: LEI Project #21190000.456, I-18-4428-Cook Co IL
Utility Concrete Products is additional insured with respects general liability subject to terms and conditions of forms and endorsements attached to policy

CERTIFICATE HOLDER

Illinois State Toll Highway Authority
2700 Ogden Ave.,
Downers Grove IL 60515

CANCELLATION

SHOULD ANY OF THE ABOVE DESCRIBED POLICIES BE CANCELLED BEFORE THE EXPIRATION DATE THEREOF, NOTICE WILL BE DELIVERED IN ACCORDANCE WITH THE POLICY PROVISIONS.

AUTHORIZED REPRESENTATIVE
[redacted]

© 1988-2015 ACORD CORPORATION. All rights reserved.



The ACORD name and logo are registered marks of ACORD